Owner's Manual

A8440GE-A

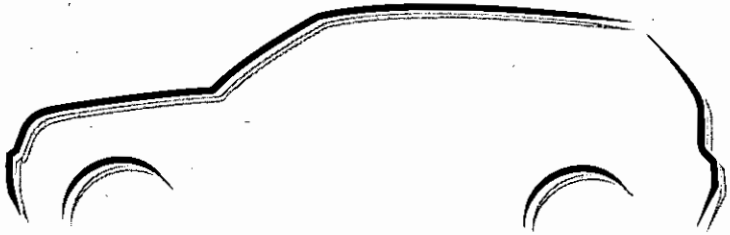

FORESTER

e-BOXER

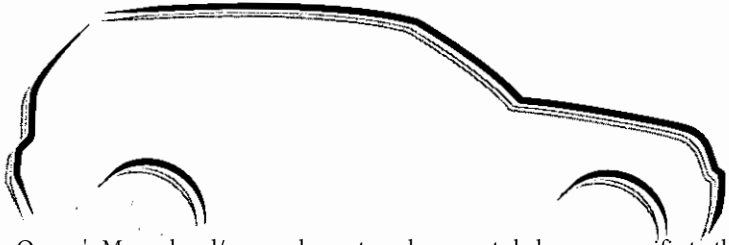

The Owner's Manual and/or supplementary documents below are specific to the Vehicle Identification Number (VIN) entered. Please read the Owner's Manual and/or supplementary documents carefully and always observe all warnings and cautions. As the Owner's Manual and supplementary documents are intended to cover several variants of the same model, certain content may pertain to equipment or features not installed on your vehicle. The Owner's Manual and supplementary documents are copyright © protected in favour of Subaru Corporation, Japan and must not be downloaded, reproduced, republished, and/or used without prior written consent, other than for personal use by you. By downloading the Owner's Manual and/or supplementary documents you agree to the foregoing.

SUBARU

Foreword

Congratulations on choosing a SUBARU vehicle. This Owner's Manual has all the information necessary to keep your SUBARU in excellent condition and to properly maintain the emission control system for minimizing emission pollutants. We urge you to read this manual carefully so that you may understand your vehicle and its operation. For information not found in this Owner's Manual, such as details concerning repairs or adjustments, we recommend that you contact the SUBARU dealer from whom you purchased your SUBARU or the nearest SUBARU dealer.

The information, specifications and illustrations found in this manual are those in effect at the time of printing. SUBARU CORPORATION reserves the right to change specifications and designs at any time without prior notice and without incurring any obligation to make the same or similar changes on vehicles previously sold. This Owner's Manual applies to all models and covers all equipment, including factory installed options. Some explanations, therefore may be for equipment not installed in your vehicle.

Please leave this manual in the vehicle at the time of resale. The next owner will need the information found herein.

NOTE: "SUBARU dealer" means an authorized SUBARU dealer and/or repairer.

SUBARU CORPORATION, TOKYO, JAPAN

"SUBARU" and the six-star cluster design are registered trademarks of SUBARU CORPORATION.

© Copyright 2025 SUBARU CORPORATION

This manual describes the following vehicle type.

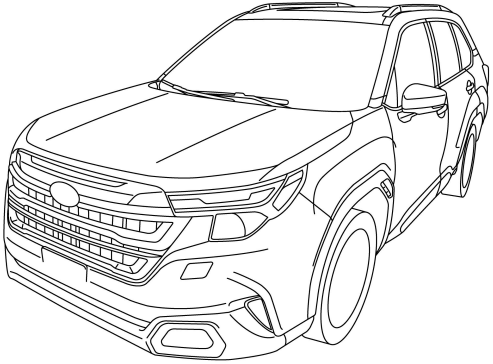

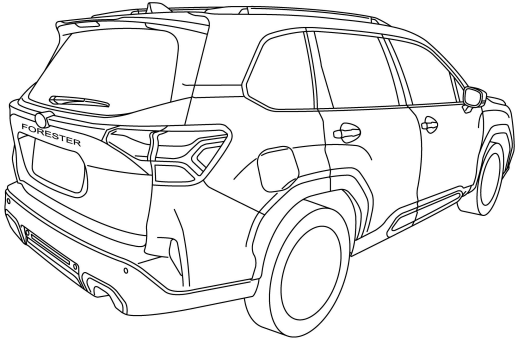

002405

Table of Contents

Introduction	1	
Illustrated Index	13	
e-BOXER System	31	
Seat, Seatbelt and SRS Airbags	47	Chapter 1
Keys and Doors	127	Chapter 2
Instruments and Controls	169	Chapter 3
Climate Control	271	Chapter 4
Audio	287	Chapter 5
Interior Equipment	289	Chapter 6
Starting and Operating	311	Chapter 7
Driving Tips	401	Chapter 8
In Case of Emergency	427	Chapter 9
Appearance Care	457	Chapter 10
Maintenance and Service	465	Chapter 11
Specifications	517	Chapter 12
Supplement	533	Chapter 13
Index	585	Chapter 14

- **Warranties** 2
- **How to Use This Owner's Manual** 2
  - Using Your Owner's Manual 2
  - Safety Warnings 3
  - Safety Symbol 3
  - Abbreviation List 4
- **Vehicle Symbols** 4
- **Safety Precautions When Driving** 5
  - Seatbelt and SRS Airbag 5
  - Child Safety 5
  - Engine Exhaust Gas (Carbon Monoxide) 7
  - Drinking and Driving 7
  - Drugs and Driving 7
  - Driving When Tired or Sleepy 8
  - Modification of Your Vehicle 8
  - Car Phone/Cell Phone and Driving 8
  - Driving Vehicles Equipped with Navigation System 8
  - Driving with Pets 8
  - Tire Pressures 9
  - On-Road and Off-Road Driving 9
  - Attaching Accessories 9
  - Vehicle Operation 10

Warranties

All warranty information, including details of coverage and exclusions, is in the “Warranty and Service Booklet”. Please read these warranties carefully.

How to Use This Owner’s Manual

■ Using Your Owner’s Manual

Before you operate your vehicle, carefully read this manual. To protect yourself and extend the service life of your vehicle, follow the instructions in this manual. Failure to observe these instructions may result in serious injury and damage to your vehicle.

Each chapter in this manual begins with a brief table of contents. This will usually allow you to tell at a glance whether or not a chapter contains the information you want.

Introduction
This chapter informs you general information before driving.

Illustrated Index
This chapter informs you about the vehicle layout with illustrations.

Chapter eS: e-BOXER System
This chapter explains the characteristics of the e-BOXER system.

Chapter 1: Seat, Seatbelt and SRS Airbags
This chapter informs you how to use the seat and seatbelt and contains precautions for the SRS airbags.

Chapter 2: Keys and Doors
This chapter informs you how to operate the keys, locks and windows.

Chapter 3: Instruments and Controls
This chapter informs you about the operation of instrument panel indicators and how to use the instruments and other switches.

Chapter 4: Climate Control
This chapter informs you how to operate the climate control.

Chapter 5: Audio
This chapter informs you about your audio system.

Chapter 6: Interior Equipment
This chapter informs you how to operate interior equipment.

Chapter 7: Starting and Operating
This chapter informs you how to start and operate your SUBARU.

Chapter 8: Driving Tips
This chapter informs you how to drive your SUBARU in various conditions and explains some safety tips on driving.

Chapter 9: In Case of Emergency
This chapter informs you what to do if you have a problem, such as a flat tire or engine overheating.

Chapter 10: Appearance Care
This chapter informs you how to keep your SUBARU looking good.

Chapter 11: Maintenance and Service

This chapter informs you when you need to take your SUBARU to the dealer for scheduled maintenance and informs you how to keep your SUBARU running properly.

Chapter 12: Specifications

This chapter informs you about the dimensions and capacities of your SUBARU.

Chapter 13: Supplement

This chapter informs you of supplementary information complied with some countries' requirements.

Chapter 14: Index

This is an alphabetical listing of all that's in this manual. You can use it to quickly find something you want to read.

For the EyeSight system:

For details about the EyeSight system, refer to the Owner's Manual supplement for the EyeSight system.

Depending on specifications, the vehicle shown in the illustrations may differ from your vehicle in terms of equipment.

■ Safety Warnings

You will find a number of WARNINGs, CAUTIONs and NOTEs in this manual.

These safety warnings alert you to potential hazards that could result in injury to you or others.

Please read these safety warnings as well as all other portions of this manual carefully in order to gain a better understanding of how to use your SUBARU vehicle safely.

⚠ WARNING

A WARNING indicates a situation in which serious injury or death could result if the warning is ignored.

⚠ CAUTION

A CAUTION indicates a situation in which injury or damage to your vehicle, or both, could result if the caution is ignored.

NOTE

A NOTE gives information or suggestions how to make better use of your vehicle.

■ Safety Symbol

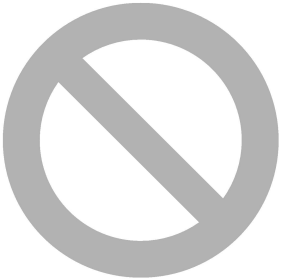

You will find a circle with a slash through it in this manual. This symbol means "Do not", "Do not do this", or "Do not let this happen", depending upon the context.

– CONTINUED –

■ Abbreviation List

You may find several abbreviations in this manual. The meanings of the abbreviations are shown in the following list.

Abbreviation	Meaning
ABS	Anti-lock brake system
A/C	Air conditioner
ADB	Adaptive Driving Beam
ALR	Automatic locking retractor
ALR/ELR	Automatic locking retractor/ Emergency locking retractor
AVH	Auto Vehicle Hold
AWD	All-wheel drive
BSD	Blind spot detection
CVT	Continuously variable transmission
EBD	Electronic brake force distribution
ELR	Emergency locking retractor
EV	Electrical Vehicle
GPS	Global positioning system
HBA	High beam assist
LCA	Lane Change Assist
LED	Light emitting diode
LHD	Left-hand drive
MPW	Maximum permissible weight
OBD	On-board diagnostics
RAB	Reverse Automatic Braking
RCTA	Rear cross traffic alert
Rear MPAW	Maximum permissible rear axle weight
RHD	Right-hand drive
RON	Research octane number
SI-DRIVE	SUBARU Intelligent Drive
SRH	Steering Responsive Headlight
SRS	Supplemental restraint system
SRVD	Subaru Rear Vehicle Detection
TPMS	Tire pressure monitoring system

Vehicle Symbols

There are some of the symbols you may see on your vehicle.

For warning and indicator lights, refer to “Warning and Indicator Lights” ☞P28.

Mark	Name
	WARNING
	CAUTION
	Read these instructions carefully
	Wear eye protection
	Battery fluid contains sulfuric acid
	Keep children away
	Keep flames away
	Prevent explosions

Safety Precautions When Driving

■ Seatbelt and SRS Airbag

⚠ WARNING

- **All persons in the vehicle should fasten their seatbelts BEFORE the vehicle starts to move. Otherwise, the possibility of serious injury becomes greater in the event of a sudden stop or accident.**
- **To obtain maximum protection in the event of an accident, the driver and all passengers must always wear seatbelts when in the vehicle. The SRS (Supplemental Restraint System) airbag does not do away with the need to fasten seatbelts. Used in combination with the seatbelts, the SRS airbag offers vehicle occupants the best possible protection in the event of a serious accident.**

  Not wearing a seatbelt increases the chance of severe injury or death in a crash even when the vehicle has the SRS airbag.
- **The SRS airbags deploy with considerable speed and force. Occupants who are not seated in the proper upright position when the SRS airbag deploys could suffer very serious injuries. Because the SRS airbag needs enough space for deployment, the driver should always sit upright and well back in the seat as far from the steering wheel as practical while still maintaining full vehicle control, and the front passenger should move the seat as far back as possible and sit upright and well back in the seat.**

For instructions and precautions, carefully read the following sections.

- For the seatbelt system, refer to “Seatbelts” ☞P67.
- For the SRS airbag system, refer to “SRS Airbag (Supplemental Restraint System Airbag)” ☞P96.

■ Child Safety

⚠ WARNING

- **Never hold a child on your lap or in your arms while the vehicle is moving. The passenger cannot protect the child from injury in a collision, because the child will be caught between the passenger and objects inside the vehicle.**
- **SUBARU strongly recommends that ALL infants and children (including those in child restraint systems) sit in the REAR seat properly restrained in a child restraint system or in a seatbelt, whichever is appropriate for the child’s age, height and weight. The SRS airbag deploys with considerable speed and force and can injure or even kill children, especially if they are not restrained or improperly restrained. Because children are lighter and weaker than adults, their risk of being injured from deployment is greater. According to accident statistics, children are safer when properly restrained in the rear seating positions than in the front seating positions. For instructions and precautions concerning child restraint systems, refer to “Child Restraint Systems” ☞P79.**

– CONTINUED –

Warning label
A AIRBAG

WARNING

- **NEVER use a rearward facing child restraint on a seat protected by an ACTIVE AIRBAG in front of it, DEATH or SERIOUS INJURY to the CHILD can occur.**
- **Always turn the child safety locks to the "LOCK" position when children sit on the rear seat. Serious injury could result if a child accidentally opens the door and falls out. Refer to "Child Safety Locks" ☞P152.**
- **Always lock the passengers' windows using the lock switch when children are riding in the vehicle. Failure to follow this procedure could result in injury to a child operating the power window. Refer to "Windows" ☞P152.**
- **Never leave unattended children, adults or animals in the vehicle. They could accidentally injure themselves or others through inadvertent operation of the vehicle. Also, on hot or sunny days, the temperature in a closed vehicle could quickly become high enough to cause severe or possibly fatal injuries to them.**
- **When leaving the vehicle, close all windows and lock all doors.**
- **In models with power rear gate, when it operates, the rear gate moves with remarkable force. It is possible to be injured if anyone is caught in or hit by the rear gate so be sure to obey the following cautions.**
  - **Check that there are no children around the rear gate before operating the power rear gate.**
  - **Do not allow children to operate the power rear gate.**

For instructions and precautions, carefully read the following sections.

- For the seatbelt system, refer to "Seatbelts" ☞P67.
- For the child restraint system, refer to "Child Restraint Systems" ☞P79.
- For the SRS airbag system, refer to "SRS Airbag (Supplemental Restraint System Airbag)" ☞P96.
- For the power rear gate, refer to "Power Rear Gate" ☞P157.

Engine Exhaust Gas (Carbon Monoxide)

WARNING

- **Never inhale engine exhaust gas. Engine exhaust gas contains carbon monoxide, a colorless and odorless gas which is dangerous, or even lethal, if inhaled.**
- **Always properly maintain the engine exhaust system to prevent engine exhaust gas from entering the vehicle.**
- **Never run the engine in a closed space, such as a garage, except for the brief time needed to drive the vehicle in or out of it.**
- **Avoid remaining in a parked vehicle for a long time while the e-BOXER system is running. If that is unavoidable, then use the ventilation fan to force fresh air into the vehicle.**
- **Always keep the front ventilator inlet grille free from snow, leaves or other obstructions to ensure that the ventilation system always works properly.**
- **If at any time you suspect that exhaust fumes are entering the vehicle, have the problem checked and corrected as soon as possible. If you must drive under these conditions, drive only with all windows fully open.**
- **Keep the rear gate closed while driving to prevent exhaust gas from entering the vehicle.**

Drinking and Driving

WARNING

Drinking and then driving is very dangerous. Alcohol in the bloodstream delays your reaction and impairs your perception, judgment and attentiveness. If you drive after drinking – even if you drink just a little – it will increase the risk of being involved in a serious or fatal accident, injuring or killing yourself, your passengers and others. In addition, if you are injured in the accident, alcohol may increase the severity of that injury.

Please don't drink and drive.

Drunken driving is one of the most frequent causes of accidents. Since alcohol affects all people differently, you may have consumed too much alcohol to drive safely even if the level of alcohol in your blood is below the legal limit. The safest thing you can do is never drink and drive.

Drugs and Driving

WARNING

There are some drugs (over the counter and prescription) that can delay your reaction time and impair your perception, judgment and attentiveness. If you drive after taking them, it may increase your, your passengers' and other persons' risk of being involved in a serious or fatal accident.

If you are taking any drugs, check with your doctor or pharmacist or read the literature that accompanies the medication to determine if the drug you are taking can impair your driving ability. Do not drive after taking any medications that can make you drowsy or otherwise affect your ability to safely operate a motor vehicle. If you have a medical condition that requires you to take drugs, please consult with your doctor.

Never drive if you are under the influence of any illicit mind-altering drugs. For your

– CONTINUED –

own health and well-being, we urge you not to take illegal drugs in the first place and to seek treatment if you are addicted to those drugs.

Driving When Tired or Sleepy

WARNING

When you are tired or sleepy, your reaction will be delayed and your perception, judgment and attentiveness will be impaired. If you drive when tired or sleepy, your, your passengers' and other persons' chances of being involved in a serious accident may increase.

Please do not continue to drive but instead find a safe place to rest if you are tired or sleepy. On long trips, you should make periodic rest stops to refresh yourself before continuing on your journey. When possible, you should share the driving with others.

Modification of Your Vehicle

WARNING

Do not remove the genuine SUBARU navigation and/or audio system. Doing so could cause the following functions to be inoperable.

- **Combination meter display**
- **Rear view image and help lines**
- **Vehicle settings**
- **Climate control**
- **Front seat heater (if equipped)**
- **Front seat ventilation (if equipped)**
- **Clock**

CAUTION

Your vehicle should not be modified. Modification could affect its performance, safety or durability, and may even violate governmental regulations. In addition, damage or performance problems resulting from modification may not be covered under warranties.

Car Phone/Cell Phone and Driving

CAUTION

Do not use a car phone/cell phone while driving; it may distract your attention from driving and can lead to an accident. If you use a car phone/cell phone, pull off the road and park in a safe place before using your phone. In some countries, only hands-free phones may legally be used while driving.

Driving Vehicles Equipped with Navigation System

WARNING

Do not allow the monitor to distract your attention from driving. Also, do not operate the controls of the navigation system while driving. The loss of attention to driving could lead to an accident. If you wish to operate the controls of the navigation system, first take the vehicle off the road and stop it in a safe place.

Driving with Pets

Unrestrained pets can interfere with your driving and distract your attention from driving. In a collision or sudden stop, unrestrained pets or cages can be thrown around inside the vehicle and hurt you or your passengers. Besides, the pets can be hurt under these situations. It is also for

their own safety that pets should be properly restrained in your vehicle. Restrain a pet with a special traveling harness which can be secured to the rear seat with a seatbelt or use a pet carrier which can be secured to the rear seat by routing a seatbelt through the carrier's handle. Never restrain pets or pet carriers in the front passenger's seat. For further information, consult your veterinarian, local animal protection society or pet shop.

■ Tire Pressures

Check and, if necessary, adjust the pressure of each tire at least once a month and before any long journey.

Check the tire pressure when the tires are cold. Use a pressure gauge to adjust the tire pressures to the values shown on the tire inflation pressure label. For detailed information, refer to "Tires and Wheels" ☞P490.

⚠ WARNING

Driving at high speeds with excessively low tire pressures can cause the tires to deform severely and to rapidly become hot. A sharp increase in temperature could cause tread separation, and destruction of the tires. The resulting loss of vehicle control could lead to an accident.

■ On-Road and Off-Road Driving

This vehicle is classified as a utility vehicle. Utility vehicles have a significantly higher rollover rate than other types of vehicles. Your vehicle has a higher ground clearance and higher center of gravity, making it more likely to roll over than ordinary passenger cars. It also handles and maneuvers differently from other passenger cars. For this reason, please read carefully the following section and follow the instructions and precautions in order to prevent serious injury or death due to loss of control, rollover and other accidents. Refer to "On-Road and Off-Road Driving" ☞P407.

■ Attaching Accessories

⚠ WARNING

- **Do not attach any accessories, labels or stickers (other than properly placed inspection stickers) to the windshield. Such items may obstruct your view.**
- **If it is necessary to attach an accessory (such as an electronic toll collection (ETC) device or security pass) to the windshield, we recommend that you consult your SUBARU dealer for details on the proper location.**
- **Do not connect any unauthorized accessories or devices to the data link connector (OBDII port). This connector should be used only with compatible diagnostic devices for inspection and maintenance by an authorized service technician using authorized service tools. Connecting unauthorized devices, such as a driver-behavior tracking device, may adversely affect vehicle systems, including safety systems, or allow others to access information stored in your vehicle. The use of unauthorized devices may also cause unexpected malfunctions, such as a drained battery, or may damage vehicle systems. The manufacturer's warranty will not cover any part that malfunctions, fails, or is damaged due to the use of an unauthorized device with the data link connector.**

– CONTINUED –

■ Vehicle Operation

▼ Before leaving vehicle unattended

⚠ CAUTION

Be sure to lock your vehicle and carry your access key fob with you.

In addition to theft, there is a risk that criminals could vandalize the vehicle, install suspicious electronic devices in the vehicle or subject it to other tampering, resulting in unforeseen complications.

▼ Key number plate storage

NOTE

- **The key number is required when repairing the vehicle or making a spare access key fob. If you lose the plate with these numbers stamped on it, you will not be able to make a spare access key fob. To prevent it from being stolen, do not leave it in the vehicle and store it in a safe place. Refer to "Keyless Access with Push-Button Start System" ☞P128.**
- **If you lose your key, we recommend that you delete the lost access key fob registration to prevent theft. Only a SUBARU dealer can delete key fob registration. We recommend that you consult your SUBARU dealer. Refer to "Key Replacement" ☞P142.**

▼ Vehicle modifications

⚠ WARNING

- **Do not install parts, make custom adjustments or perform wiring or other operations that are not suitable for the vehicle.**
- **Do not connect accessories to the vehicle wiring or connectors unless they are genuine SUBARU products. SUBARU's vehicle warranty does not cover any malfunctions resulting from connecting the vehicle to products other than those specified.**
- **It may be illegal to modify the vehicle by installing parts other than genuine SUBARU parts. Consult your SUBARU dealer about the kinds of parts (tires, wheels, mufflers, etc.) you can legally install on your vehicle.**

▼ Device installation

⚠ WARNING

Connecting devices that are not intended to be used in the vehicle or in a particular connector can adversely affect the vehicle system or cause the 12 V battery to discharge. It may also cause personal information leaks or unauthorized remote operation of vehicle features, resulting in unforeseen complications. Any complication caused by connecting a device other than one intended to be used in the vehicle is not covered by the manufacturer's warranty. SUBARU also bears no responsibility for any such complication.

- **The vehicle trouble diagnosis connector should only be used to connect the vehicle data link connector (OBDII) for inspection and maintenance purposes.**
- **Use the USB port only for data communication with your vehicle and for device charging.**

▼ **Suspicious device handling**

⚠ WARNING

If there is a suspicious electronic device installed on your vehicle, remove it immediately and consult your SUBARU dealer.

Any complication due to the connection of a suspicious device is not covered by the manufacturer's warranty. SUBARU also bears no responsibility for any such complication.

▼ **Deleting personal information from vehicle**

⚠ CAUTION

When you sell your vehicle, make sure to protect your personal information, such as by deleting any personal information registered in the vehicle. For details about the Factory Data Reset, refer to the Owner's Manual supplement for the audio and navigation system.

Note that initialization does not erase personal information completely. To delete personal information from the vehicle completely, contact your SUBARU dealer.

Illustrated Index

- Exterior 14
- Interior 16
- Cargo Area 19
- Instrument Panel 20
  - Left-Hand Drive Models 20
  - Right-Hand Drive Models 21
- Steering Wheel 22
- Light Control and Wiper Control Levers/ Switches 23
  - Type A 23
  - Type B 24
- Combination Meter 25
  - 4.2-Inch Meter Display Models 25
  - 12.3-Inch Meter Display Models 26
- Warning and Indicator Lights 28

Exterior

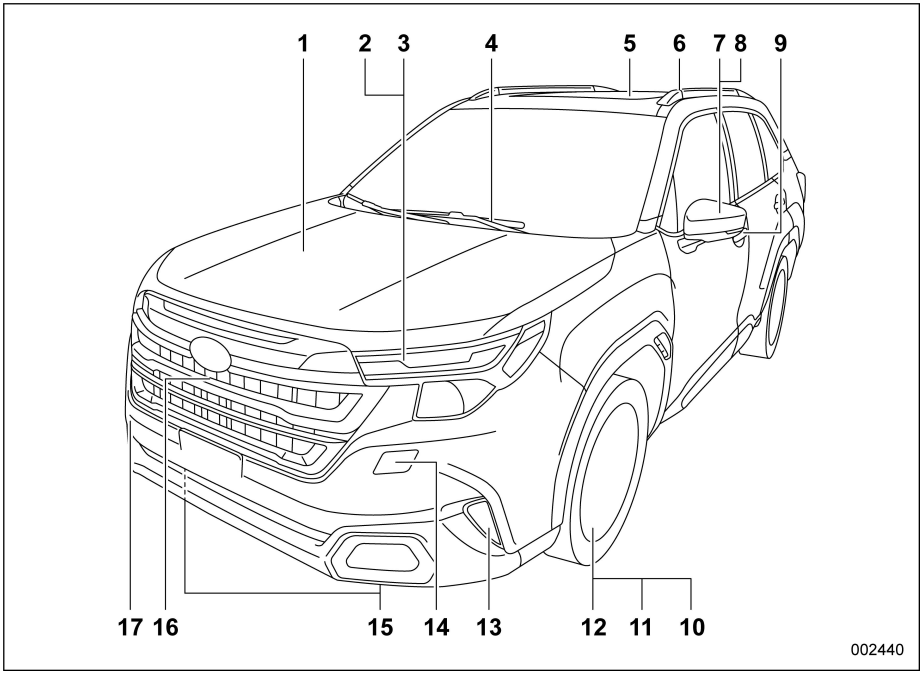

1 Engine hood (page 475)
2 Headlights (page 243, 510)
3 Turn signal lights (page 256, 510)
4 Windshield wipers (page 259, 502)
5 Sunroof (page 166)
6 Roof rails (page 414)
7 Outside mirrors (page 265)
8 Side turn signal lights (page 256, 510)
9 Door locks (page 146)
10 Tire chains (page 412)
11 Tire pressure (page 493)
12 Flat tires (page 430)
13 Fog lights (page 254, 510)
14 Headlight washer (page 262)
15 Tie-down hooks (page 445)
16 Front view camera (page 351)
17 Towing hook (page 444)

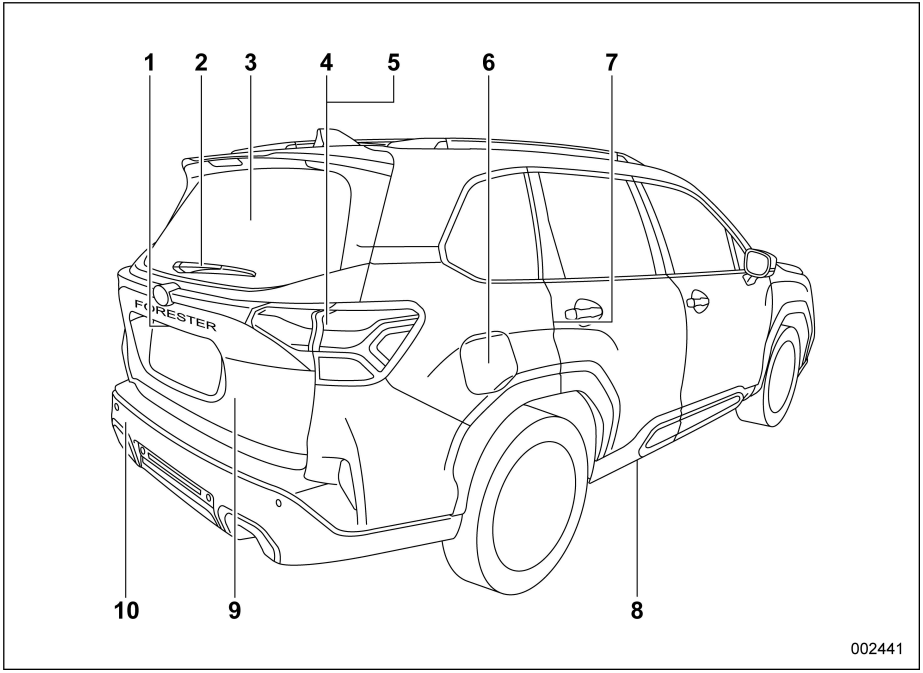

1 Rear view camera (page 361, 351)
2 Rear wiper (page 261)
3 Rear window defogger (page 263)
4 Lights (page 243, 510)
5 Turn signal lights (page 256, 510)
6 Fuel filler lid and cap (page 314)
7 Child safety locks (page 152)
8 Tie-down holes (page 445)
9 Rear gate (page 155)
10 Towing hook (page 445)

Interior

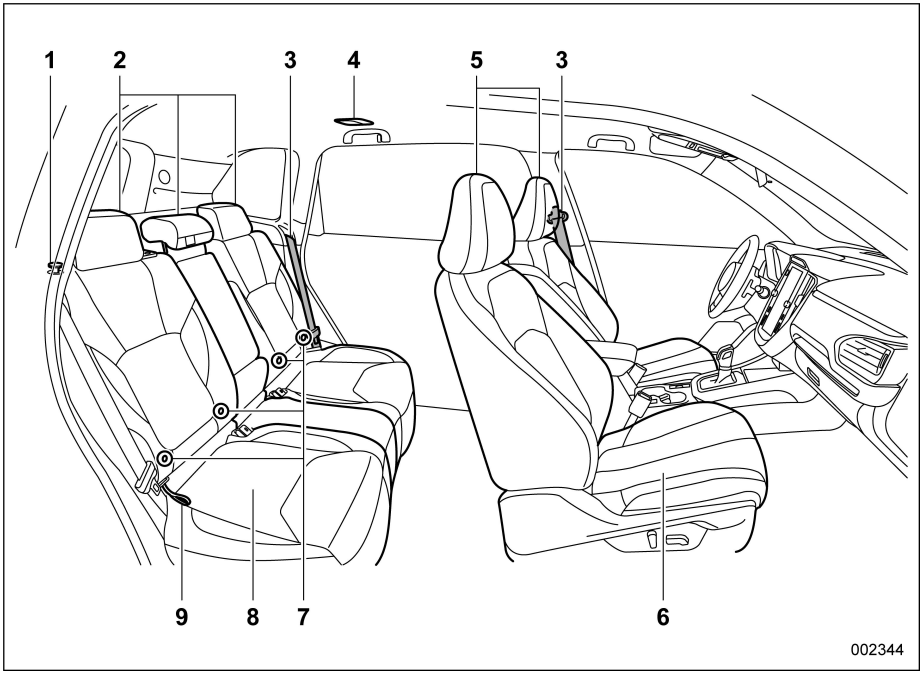

1 Lock release knobs (page 59)
2 Head restraint adjustment for rear seat (page 62)
3 Seatbelts (page 67)
4 Dome light (page 290)
5 Head restraint adjustment for front seat (page 57)
6 Front seats (page 48)
7 Lower anchorages for ISOFIX child restraint system (page 92)
8 Rear seats (page 58)
9 Reclining the seatback (page 61)

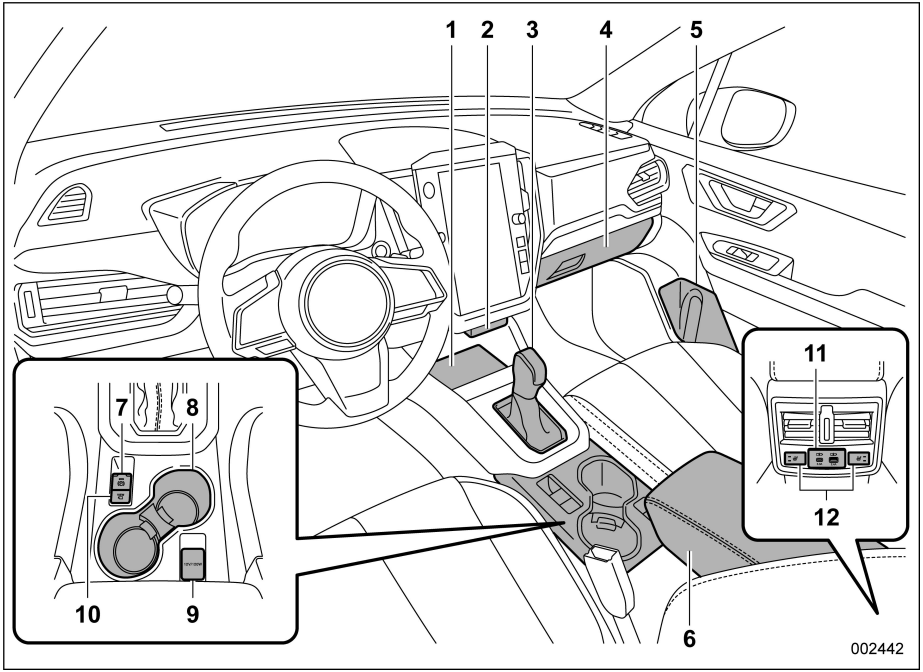

The illustration above is a typical example for left-hand drive models. For right-hand drive models, the locations of some switches/levers are different from those shown in the illustration.

1 Wireless charger (page 299)
2 USB power supply (page 298)/AUX*
3 Select lever (page 323)
4 Glove box (page 294)
5 Bottle holder (page 296)
6 Center console (page 294)
7 Electronic parking brake switch (page 343)
8 Cup holder (page 295)
9 Accessory power outlet (page 297)
10 View monitor switch (page 351)
11 Console USB power supply (page 298)
12 Rear seat heater switches (page 65)

*: For details about how to use the audio and navigation system (if equipped), refer to the separate navigation/audio Owner's Manual.

– CONTINUED –

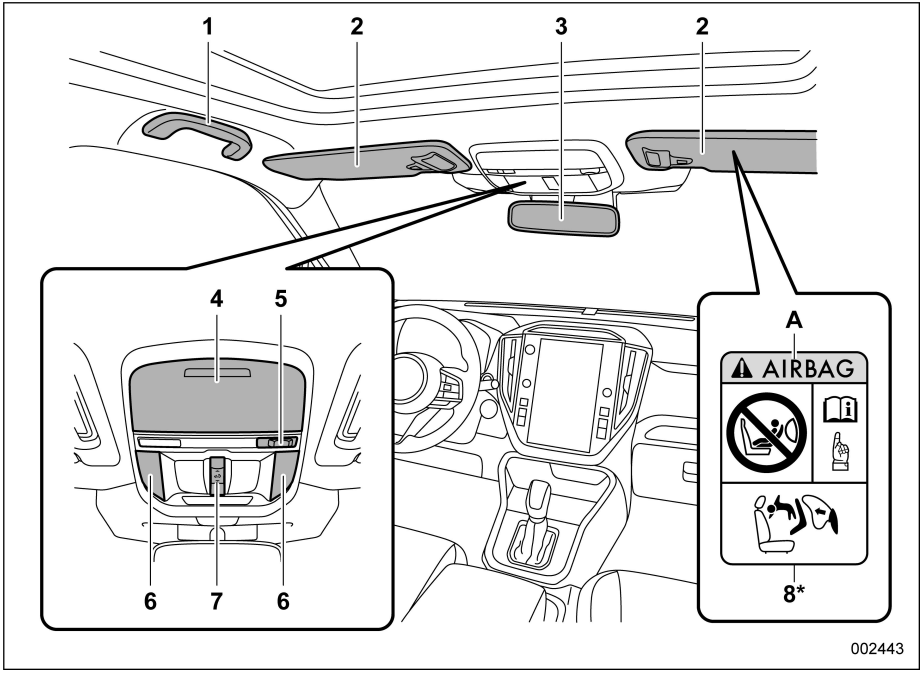

The illustration above is a typical example for left-hand drive models. For right-hand drive models, the locations of some switches/levers are different from those shown in the illustration.

1 Assist grip (page 303)
2 Sun visors (page 292)
3 Inside mirror (page 264)
4 Overhead console (page 293)
5 Door interlock switch (page 290)
6 Map light switches (page 290)
7 Sunroof slide switch (page 167)
8 Warning labels for child restraint system (page 81)
A AIRBAG

*: NEVER use a rearward facing child restraint on a seat protected by an ACTIVE AIRBAG in front of it, DEATH or SERIOUS INJURY to the CHILD can occur.

Cargo Area

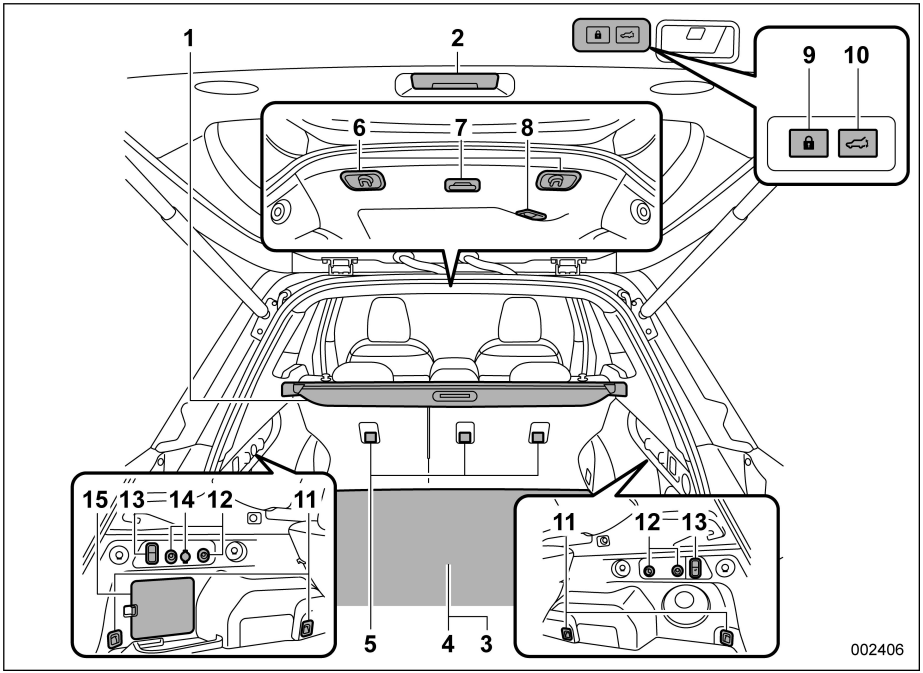

1 Cargo area cover (page 307)
2 Rear gate light (page 291)
3 Maintenance tools (page 428)
4 Under-floor storage compartment (page 309)
5 Tether anchorages (page 94)
6 Cargo upper hooks (page 305)
7 Cargo area light (page 291)
8 Rear center seatbelt (page 72)
9 Power rear gate lock button (page 159)
10 Power rear gate button (page 159)
11 Cargo tie-down hooks (page 308)
12 Shopping bag hooks (page 305)
13 Release lever for rear seatback (page 59)
14 Accessory power outlets (page 297)
15 Flat tire repair kit (page 430)

Instrument Panel

■ Left-Hand Drive Models

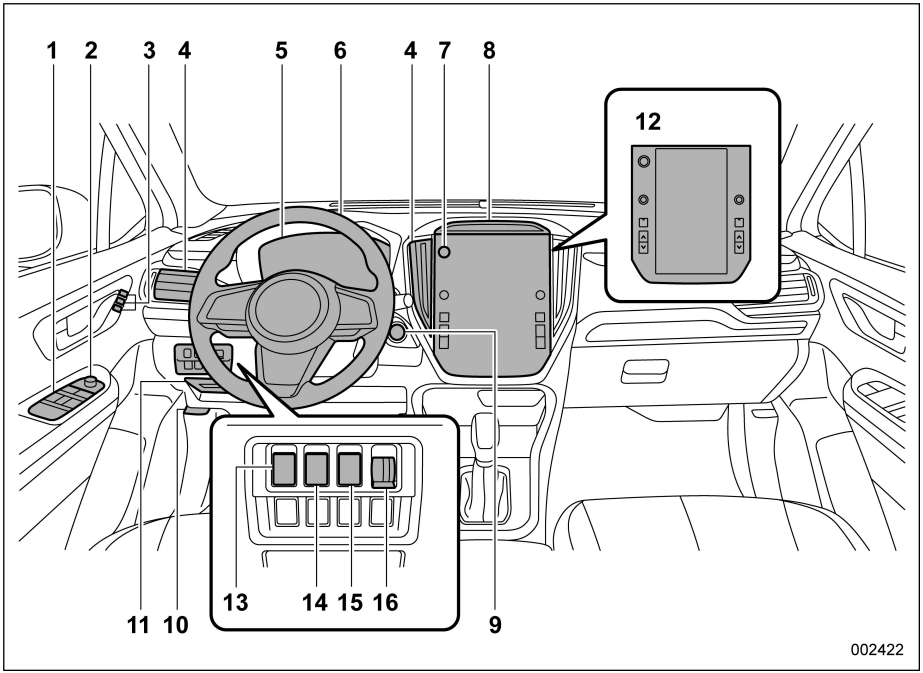

1 Power window switches (page 152)
2 Remote control mirror switch (page 265)
3 Driver's seat memory (page 52)
4 Ventilators (page 272)
5 Combination meter (page 175)
6 Tilt/Telescopic steering wheel (page 268)
7 Hazard warning flasher switch (page 174)
8 Camera for Driver Monitoring System (page 387)
9 Ignition switch (page 172)
10 Hood release knob (page 475)
11 Fuse box (page 509)
12 Center information display (page 214)/ Climate control (page 273)/Audio*/Navigation system*
13 EV (Electric Vehicle) drive mode switch (page 35)
14 Power rear gate button (page 158)
15 Hands-Free Power Rear Gate off switch (page 162)
16 Illumination brightness control dial (page 178)

*: For details about how to use the audio and navigation system (if equipped), refer to the separate navigation/audio Owner's Manual.

■ Right-Hand Drive Models

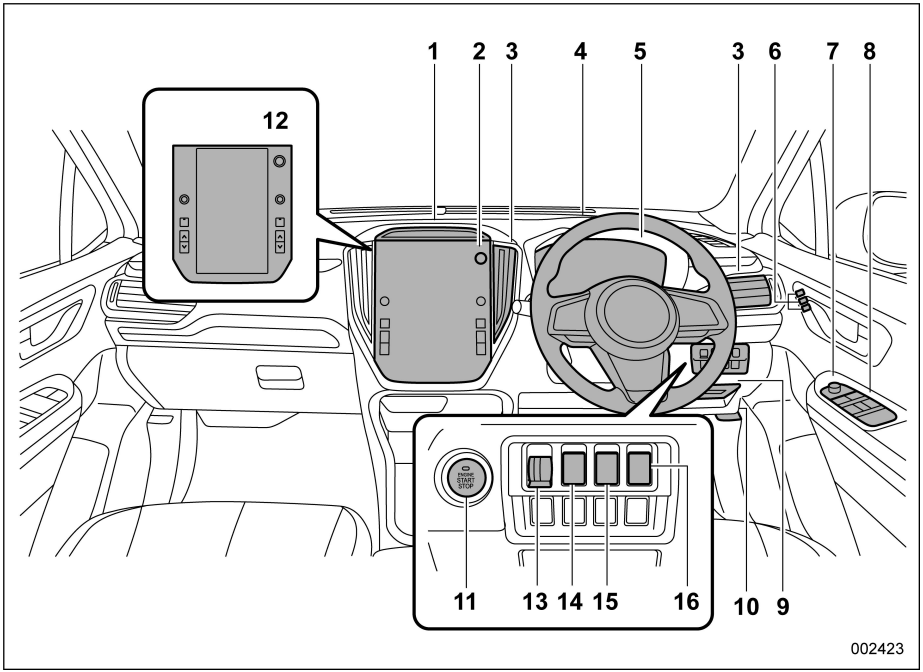

1 Camera for Driver Monitoring System (page 387)
2 Hazard warning flasher switch (page 174)
3 Ventilators (page 272)
4 Tilt/Telescopic steering wheel (page 268)
5 Combination meter (page 175)
6 Driver's seat memory (page 52)
7 Remote control mirror switch (page 265)
8 Power window switches (page 152)
9 Fuse box (page 509)
10 Hood release knob (page 475)
11 Ignition switch (page 172)
12 Center information display (page 214)/Climate control (page 273)/Audio*/Navigation system*
13 Illumination brightness control dial (page 178)
14 Hands-Free Power Rear Gate off switch (page 162)
15 Power rear gate button (page 158)
16 EV (Electric Vehicle) drive mode switch (page 35)

*: For details about how to use the audio and navigation system (if equipped), refer to the separate navigation/audio Owner's Manual.

Steering Wheel

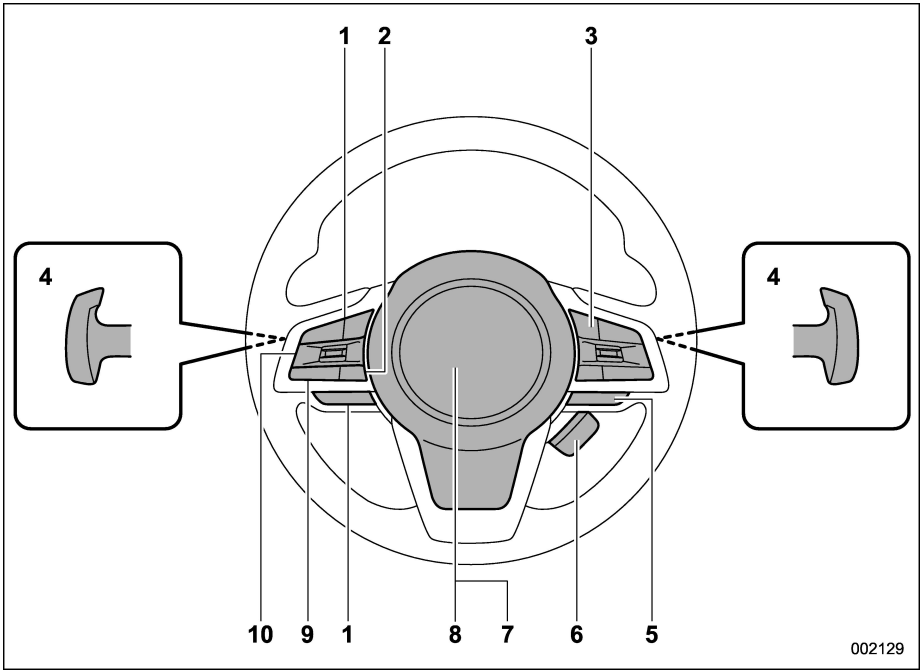

1 Audio control switch*1
2 Talk switch for voice command system*1
3 Cruise control switches*2/LIM switch*2
4 Shift paddles (page 327)
5 SI-DRIVE switch (page 329)
6 Heated Steering Wheel switch (page 269)
7 SRS airbag (page 96)
8 Horn (page 270)
9 Hands-free phone switch*1/mute switch for audio*1
10 Control switches for combination meter display (page 207)

*1: For details about how to use the switches, refer to the separate navigation/audio Owner's Manual.

*2: For the EyeSight system, refer to the Owner's Manual supplement for the EyeSight system.

Light Control and Wiper Control Levers/Switches

■ Type A

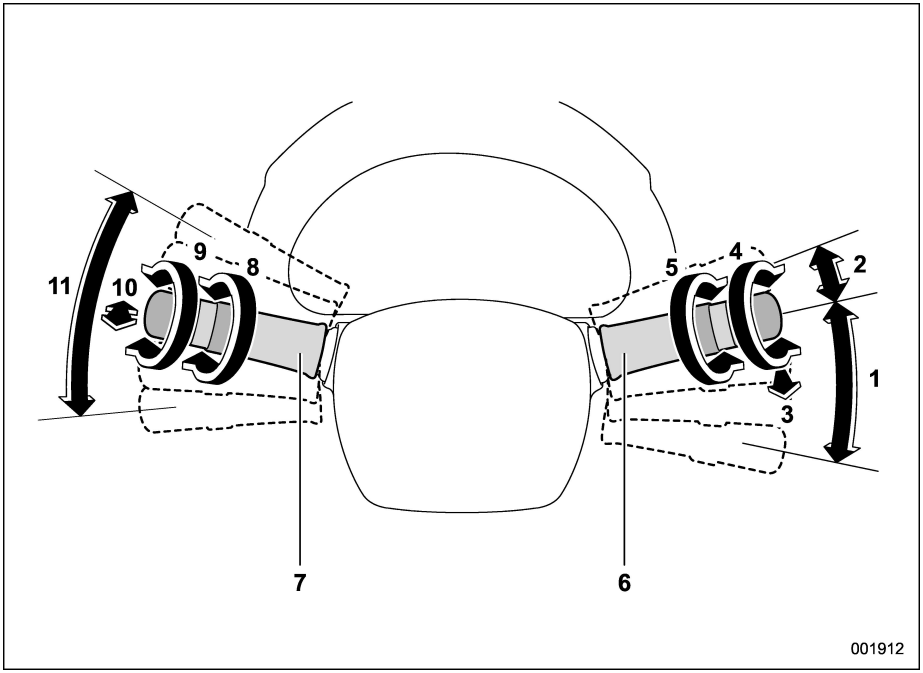

1 Windshield wiper (page 256)
2 Mist (page 259)
3 Windshield washer (page 260)
4 Rear window wiper and washer switch (page 261)
5 Sensor sensitivity control (page 260)
6 Wiper control lever (page 259)
7 Light control switch (page 243)
8 Fog light switch (page 254)
9 Headlight ON/OFF/AUTO (page 244)
10 Headlight flasher High/Low beam change (page 246)
11 Turn signal lever (page 256)

– CONTINUED –

■ Type B

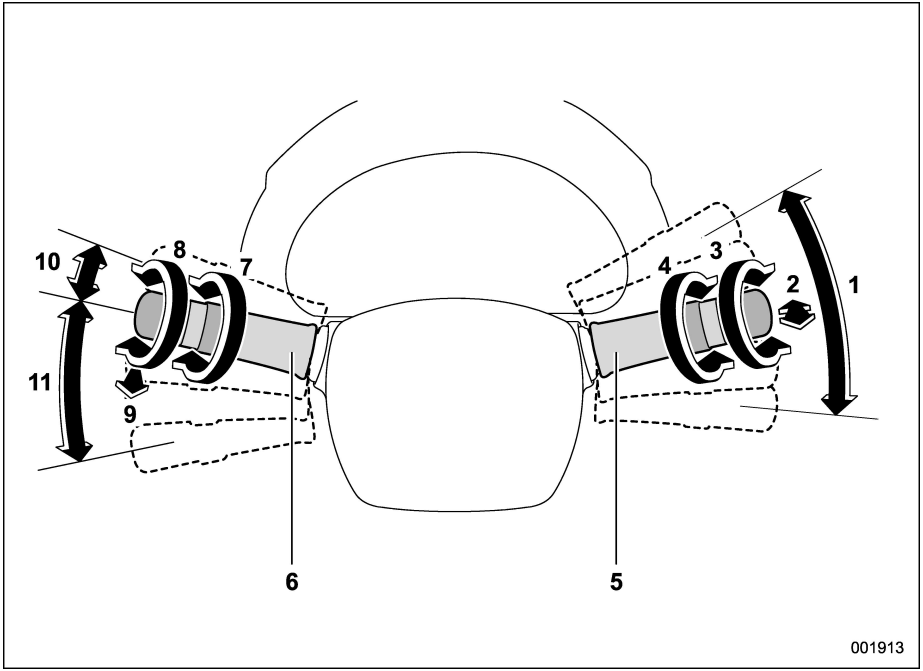

1 Turn signal lever (page 256)
2 Headlight flasher High/Low beam change (page 246)
3 Headlight ON/OFF/AUTO (page 244)
4 Fog light switch (page 254)
5 Light control switch (page 243)
6 Wiper control lever (page 256)
7 Sensor sensitivity control (page 260)
8 Rear window wiper and washer switch (page 261)
9 Windshield washer (page 260)
10 Mist (page 259)
11 Windshield wiper (page 259)

Combination Meter

■ 4.2-Inch Meter Display Models

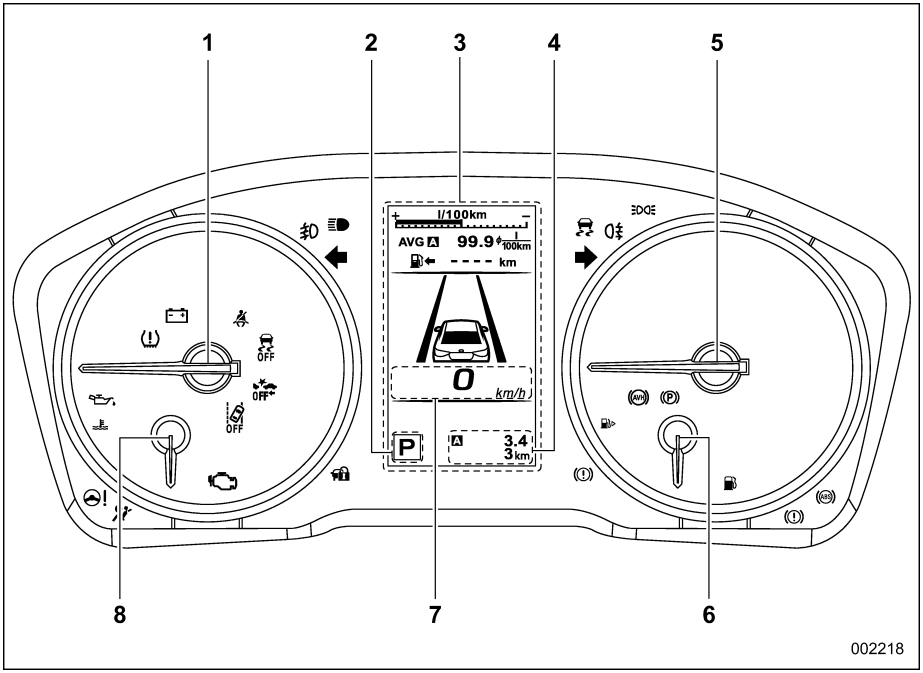

1 Power meter (page 175)
2 Select lever/gear position indicator (page 198)
3 Combination meter display (page 203)
4 Trip meter and odometer (page 176)
5 Speedometer (page 175)
6 Fuel gauge (page 177)
7 Digital speed screen (page 214)
8 Engine coolant temperature gauge (page 177)

– CONTINUED –

■ 12.3-Inch Meter Display Models

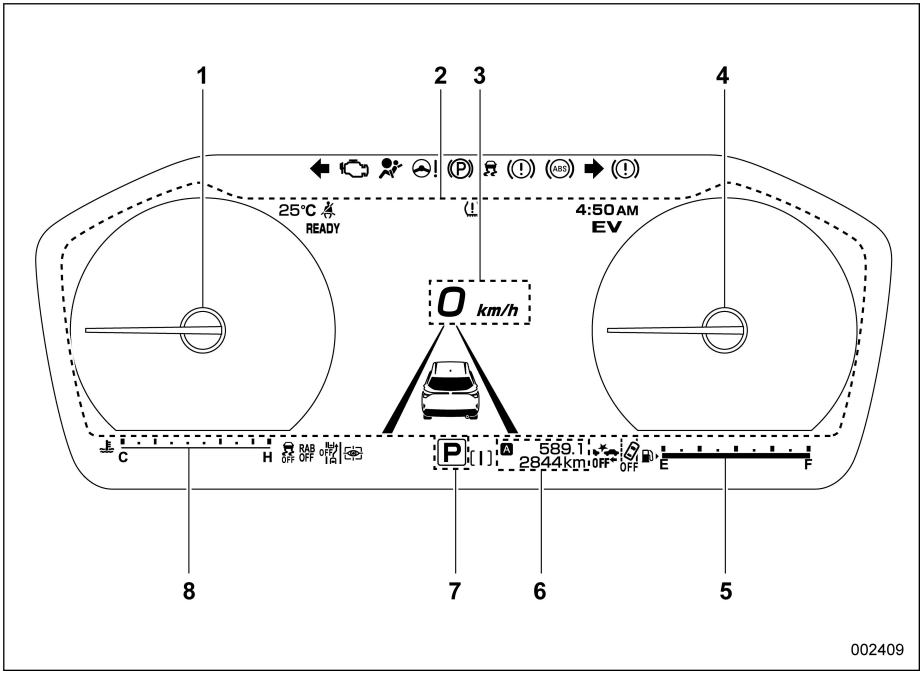

The illustration above is a typical example. For some models, the combination meter may be slightly different than that shown in the illustration.

1 Power meter (page 175)
2 Combination meter display (page 203)
3 Digital speed screen (page 214)
4 Speedometer (page 175)
5 Fuel gauge (page 177)
6 Trip meter and odometer (page 176)
7 Select lever/gear position indicator (page 198)
8 Engine coolant temperature gauge (page 177)

Warning and Indicator Lights

Mark	Name	Page
	Seatbelt warning light	180
	Front passenger's seatbelt warning light	180
	Rear seatbelt warning light	182
	SRS airbag system warning light	183
ON	Front passenger's frontal airbag ON indicator light (if equipped)	183
OFF	Front passenger's frontal airbag OFF indicator light (if equipped)	183
	Malfunction indicator light (Check Engine light)	184
	Charge warning light	184
	Oil pressure warning light	185
	Engine low oil level warning light	185
ABS	ABS warning light	187

Mark	Name	Page
	Brake system warning light (red)	188
	Electronic parking brake warning light/ Brake system warning light (yellow)	189
P	Electronic parking brake indicator light	189
	Door open indicator light	191
	Engine hood open warning light	191
	Low fuel warning light	191
AWD	All-Wheel Drive warning light	191
	Power steering warning light	191
AVH	Auto Vehicle Hold indicator light	190
	Vehicle Dynamics Control warning light/Vehicle Dynamics Control operation indicator light	192

Mark	Name	Page
OFF	Vehicle Dynamics Control OFF indicator light	193
	Access key warning indicator	193
	Immobilizer indicator light	198
	Turn signal indicator lights	199
	High beam indicator light	199
A	High beam assist indicator (if equipped)	199
A	Adaptive driving beam warning light (yellow) (if equipped)/Adaptive driving beam indicator light (green) (if equipped)	199
	Automatic headlight beam leveler warning light	199
	LED headlight warning light	199

Mark	Name	Page
SRH OFF	Steering Responsive Headlight OFF indicator light	199
SRH	Steering Responsive Headlight warning light	199
	Front fog light indicator light	200
	Rear fog light indicator light (if equipped)	200
	X-MODE indicator	200
	Hill descent control indicator light	200
	Headlight indicator light	199
	Low tire pressure warning light (if equipped)	185
	Windshield washer fluid warning light	191
	Subaru Rear Vehicle Detection warning indicator (if equipped)	200
OFF	Subaru Rear Vehicle Detection OFF indicator (if equipped)	200

Mark	Name	Page
	Vehicle detected in adjacent lane indicator (models with 12.3-inch meter display) (if equipped)	370
[I]	SI-DRIVE indicator	198
[S]	SI-DRIVE indicator	198
	Icy road surface warning light	201
RAB	RAB warning indicator (if equipped)	201
RAB OFF	RAB OFF indicator (if equipped)	201
P OFF	Sonar Audible Alarm OFF indicator (if equipped)	202
	Driver Monitoring System operation indicator light (green) (if equipped)	201
	Driver Monitoring System warning light (yellow) (if equipped)	201
OFF	Driver Monitoring System OFF indicator light (if equipped)	201

Mark	Name	Page
	Driver Monitoring System temporary stop indicator light (if equipped)	201
	Front Cross Traffic Braking warning indicator (if equipped)	202
OFF	Front Cross Traffic Braking OFF indicator (if equipped)	202
READY	e-BOXER system READY indicator light	202
	e-BOXER system fail lamp	202
	e-BOXER system overheat warning light	202
EV	EV (Electric Vehicle) indicator	203
EV MODE	EV (Electric Vehicle) drive mode indicator	35
OFF	Pedestrian alert system warning indicator light	202

e-BOXER System

- e-BOXER System Features 32
  - e-BOXER System Operation Mode.....33
  - Control When Driving in Each Mode.....33
  - EV (Electric Vehicle) Drive Mode 35
  - Pedestrian Alert System 36
  - Energy Flow Screen.....37
- e-BOXER System Precautions 38
  - High Voltage Battery and High Voltage Battery Air Intake.....42
  - Emergency Shut Off System.....42
  - e-BOXER System Warning Message 43
- Hybrid Vehicle Driving Tips..... 43
- Troubleshooting 45
  - When Messages Are Displayed.....45

e-BOXER System Features

The e-BOXER system is a system excellent in both economical efficiency of electric vehicles and practicality of hybrid vehicles.

The EV driving range will vary in accordance with conditions such as vehicle speed, the amount of charge remaining in the high voltage battery and the usage of the climate control system. The gasoline engine may also be used simultaneously in accordance with driving conditions.

If the amount of electricity remaining in the high voltage battery becomes low, the vehicle is automatically controlled in such a way that it can be driven as a hybrid vehicle through the joint use of the gasoline engine.

NOTE

- **However, as the gasoline engine is used depending on the situation even in driving using only the electric motor, and the gasoline engine is provided on board as a power source in driving using both the electric motor and engine. For that reason it is necessary to refuel the vehicle. Check the fuel amount and refill immediately when the fuel level becomes low. Refer to "Fuel" ☞P313.**
- **If the vehicle is not used for a long time, the 12 V battery may discharge. In this event, charge the 12 V battery. In order to prevent the high voltage battery from becoming extremely low in charge, and turn the ignition switch off after the gasoline engine has stopped automatically. (If the gasoline engine does not start up even after approximately 10 seconds have passed since the e-BOXER system READY indicator light came on, the ignition switch can be turned off without any further action.)**
- **There may be no engine sound or vibration even though the vehicle is able to move with the e-BOXER system READY indicator light is illuminated. For safety, apply the parking brake and make sure to shift the select lever position to "P" when parked.**
- **The following sounds or vibrations may occur when the e-BOXER system is operating and are not malfunctions.**
  - **Electric motor sounds may be made by the vehicle.**
  - **Sounds may be heard from the high voltage battery when the e-BOXER system starts or stops.**
  - **Relay operating sounds such as a snap or soft clank will be emitted from the high voltage battery, the cargo area, when the e-BOXER system is started or stopped.**
  - **Sounds from the e-BOXER system may be heard when the back door is open.**
  - **Sounds may be heard from the transmission when the gasoline engine starts or stops, when driving at low speeds, or during idling.**
  - **Engine sounds may be heard when accelerating sharply.**
  - **Sounds may be heard due to regenerative braking when the brake pedal is depressed or as the accelerator pedal is released.**
  - **Vibration may be felt when the gasoline engine starts or stops.**
  - **Cooling fan sounds may be heard from the air intake.**
- **For details about maintenance, repair, recycling, and disposal, we recommend that you contact your SUBARU dealer. Do not dispose of the vehicle yourself.**

■ e-BOXER System Operation Mode

The system switches automatically between being powered by only the electric motor and powered by both the electric motor and engine according to the driving conditions and changes in the charge level of the high voltage battery.

When in EV driving, the EV indicator illuminates on the combination meter. Refer to “EV (Electric Vehicle) Indicator” ☞P203.

NOTE

- **When the charge level of the high voltage battery is high, EV driving is used. However the engine may start automatically at times of high load or when driving at high speed.**
- **When the charge level of the high voltage battery is low, both the engine and electric motor are used for driving. However if the charge level recovers as a result of regenerative braking or other charging, EV driving can be used again.**

■ Control When Driving in Each Mode

▼ Driving using only the electric motor

The EV driving range will vary in accordance with conditions such as vehicle speed, the amount of charge remaining in the high voltage battery and the usage of the climate control system. In order to drive only on the electric motor power for a long time, observe the following.

- Avoid sudden acceleration, sudden deceleration and be sure to drive smoothly. If you repeatedly accelerate, the high voltage battery charge will deplete quickly. Also, EV driving may be canceled by rapid acceleration or high vehicle speed.
- Restrain your speed as much as possible. The distance that can be driven in driving using only the electric motor will reduce considerably at high speeds.

NOTE

- **EV driving range**
  - **The EV driving range changes in accordance with the charge status of the high voltage battery and the speed of the vehicle.**
  - **Even if there is enough charge remaining in the high voltage battery, EV driving may be canceled and both the gasoline engine and the electric motor are used depending on the situation.**
- **Even if there is a sufficient amount of electricity remaining in the high voltage battery, EV driving may be canceled and both the gasoline engine and the electric motor are used depending on the situation. EV driving will be returned automatically after EV driving becomes possible again.**
  EV driving may be canceled automatically in the following circumstances:
  - **Power is needed temporarily, for example when the accelerator pedal is depressed firmly or when accelerating suddenly.**
  - **The temperature of the e-BOXER system is high because the vehicle has been left in the sun, driven on a hill, driven at high speeds, etc.**
  - **The temperature of the e-BOXER system is low.**
  - **The climate control system is in operation.**
  - **The defroster button is pressed.**
  - **The system determines that the gasoline engine needs to be**

– CONTINUED –

started.
The gasoline engine may also operate in circumstances other than those listed above, depending on conditions.

▼ Driving using both the electric motor and engine

In driving using both the electric motor and engine, controls are primarily carried out as follows in accordance with the driving conditions.

- The gasoline engine stops when the vehicle is stopped.*
- During start off, the electric motor (traction motor) drives the vehicle.
- During normal driving, the gasoline engine and electric motor (traction motor) are controlled effectively, and the vehicle is driven with optimum fuel efficiency. Also, when necessary, the electric motor (traction motor) operates as an electrical generator to charge the high voltage battery.
- When the accelerator pedal is depressed heavily, the drive force from both the gasoline engine and the electric motor (traction motor) is used to accelerate.

*: When the high voltage battery requires charging or the engine is warming up, the gasoline engine will not automatically stop.

NOTE

- **The gasoline engine starts and stops automatically. However, it may not stop automatically in the following conditions:**
  - **During gasoline engine warm-up**
  - **During high voltage battery charging**
  - **When the temperature of the high voltage battery is high or low.**
  - **The defroster button is pressed.**
- **Depending on the circumstances, the gasoline engine may also not stop automatically in situations other than those above.**
- **Repeatedly driving short-distances when the gasoline engine is cold leads to poor fuel economy because the gasoline engine starts and stops frequently.**

▼ When braking (regenerative braking)

The electric motor (traction motor) charges the high voltage battery.

The EV driving range can be extended by actively using this regenerative braking to store electricity in the high voltage battery.

Moreover, as fuel consumption is also reduced when driving using both the electric motor and engine, the regenerative braking system can be used effectively.

NOTE

- **In the following situations, kinetic energy is converted to electric energy and deceleration force can be obtained in conjunction with the recharging of the high voltage battery.**
  - **The accelerator pedal is released while driving with the select lever position in “D” or “M”.**
  - **The brake pedal is depressed while driving with the select lever position in “D” or “M”.**
- **When the high voltage battery is fully charged, it is not recharged by regenerative braking.**

■ EV (Electric Vehicle) Drive Mode

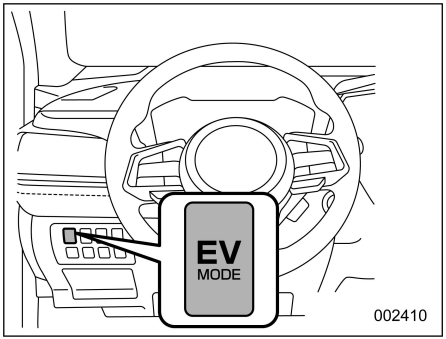

EV (Electric Vehicle) drive mode switch

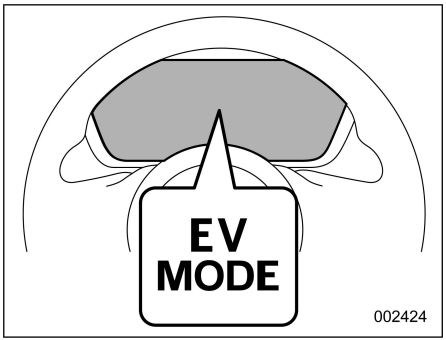

EV (Electric Vehicle) drive mode indicator

When you press the EV drive mode switch, the EV drive mode indicator lights up and you will be able to run the vehicle in EV drive mode.

When the EV drive mode switch is pressed again, the vehicle returns to the e-BOXER system driving mode (running the vehicle using the engine and the electric motor).

NOTE

- **In the following cases, the system may not switch the driving mode to EV drive mode. When the system does not switch to EV drive mode, a beep sounds and a warning message is displayed on the combination meter display.**
  - **The temperature of the e-BOXER system is high because the vehicle has been left in the sun, driven on a hill, driven at high speeds, etc.**
  - **The temperature of the e-BOXER system is low.**
  - **The engine is warming up.**
  - **The high voltage battery power icon displayed on the energy flow screen is low.**
  - **The vehicle speed is high.**
  - **Additional power is needed temporarily, for example when the accelerator pedal is depressed firmly or when the vehicle accelerates suddenly.**
  - **The defroster button is pressed.**
  - **The climate control system is in operation.**
  - **The EyeSight function is activated.**
- **If you start the e-BOXER system when the engine is cold, the system will automatically start warming up the engine, and it will not be possible to switch to EV drive mode. After the e-BOXER system starts operating and the e-BOXER system READY indicator light illuminates, press the EV drive mode switch before the engine starts.**
- **In the following cases, while you are driving the vehicle in EV drive mode, the system may automatically switch to the e-BOXER system driving (running the vehicle using the engine and the electric motor). This occurs when the EV drive mode is canceled. The EV drive mode indicator will then flash and turn off. A message will then be displayed on the combination meter display.**
  - **The power of the traction battery displayed on the energy flow screen is low.**
  - **The vehicle speed is high.**

– CONTINUED –

- **Additional power is needed temporarily, such as when you depress the accelerator pedal firmly or when the vehicle accelerates suddenly.**

■ Pedestrian Alert System

When driving with the gasoline engine stopped, a sound which changes in volume in accordance with the driving speed will sound in order to warn people nearby of the vehicle's approach. The sound will stop when the vehicle speed exceeds approximately 24 km/h (15 mph).

The sound is produced continuously by the system while the vehicle is reversing.

NOTE

- **The pedestrian alert system warning indicator light blinks when a malfunction occurs in the pedestrian alert system. We recommend that you have your vehicle inspected at a SUBARU dealer. Refer to "Pedestrian Alert System Warning Indicator Light" ☞P202.**
- **In the following cases, the pedestrian alert system may be difficult for surrounding people to hear.**
  - **In very noisy areas**
  - **In the wind or the rain**

Also, as the pedestrian alert system is installed on the front of the vehicle, it may be more difficult to hear from the rear of the vehicle.

■ Energy Flow Screen

The status of the energy flow is shown on the combination meter display as follows.

- Power from the engine to wheels: Orange
- Power from the electric motor to wheels: Green
- Charging energy flow from the engine and wheels to the high voltage battery: Aqua blue

Display	Status	Display	Status	Display	Status
	When driving using only the engine power		When there is no energy current		When charging the high voltage battery by using the engine power while the vehicle is stopped
	When driving using only the electric motor power		When the electric motor is assisting the engine	—	—
	When charging the high voltage battery while driving using the engine power		When charging the high voltage battery with the regenerative brakes	—	—

In addition, if a warning or malfunction is detected in the e-BOXER system, an interruption screen will be displayed on the combination meter display. For details, refer to “Telltale Screen” ☞P209.

NOTE

- **High voltage battery power is consumed more than usual when driving only using the electric motor power for a long time.**
- **High voltage battery power is consumed more than usual when the vehicle is continuously or repeatedly driven only using the electric motor power. Although this is not a problem, avoid stop-and-go driving as much as possible by methods such as checking traffic reports before you start driving.**

e-BOXER System Precautions

WARNING

- **Take care when handling the e-BOXER system, as it contains a high voltage system (about 650 V at maximum) as well as parts that become extremely hot when the e-BOXER system is operating. Obey the warning labels attached to the vehicle. The high voltage system is very dangerous and improper operation can cause severe burns and electric shock that may result in death or serious injury.**
- **When driving on the electric motor alone, there is no sound coming from the engine. Therefore, there is a possibility that the surrounding people do not notice the vehicle starting and approaching. Pay attention to your surroundings while driving.**

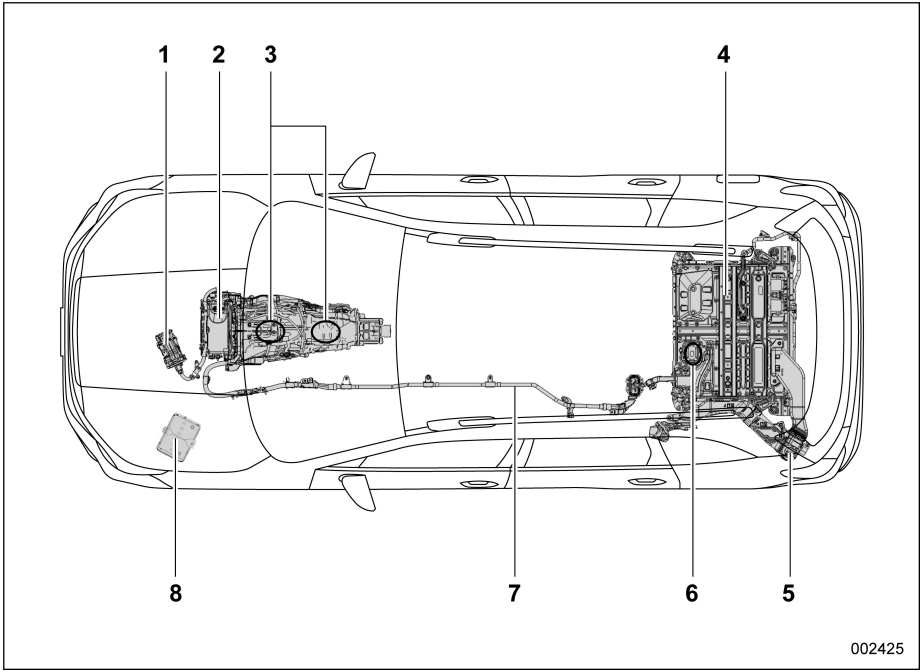

1 Air compressor
2 Power control unit
3 Electric motor (traction motor)
4 High voltage battery
5 High voltage battery cooling fan
6 Service plug
7 High voltage cable (orange)
8 12 V battery

CAUTION

Do not remove the warning label for high voltage battery attached to the top of the high voltage battery.

– CONTINUED –

WARNING

- **The vehicle has high voltage DC and AC systems as well as a 12-volt system. DC and AC high voltage is very dangerous and can cause severe burns and electric shock that may result in death or serious injury.**
  - **Never touch, disassemble, remove or replace the high voltage parts, cables or their connectors.**
  - **The e-BOXER system will become hot after starting as the system uses high voltage. Be careful of both the high voltage and the high temperature, and always obey the warning labels attached to the vehicle.**
- **Observe the following precautions to reduce the risk of death or serious injury when an accident occurs:**
  - **Pull your vehicle off the road, apply the parking brake, shift the select lever position to "P", and turn the e-BOXER system off.**
  - **Do not touch the high voltage parts, cables or connectors.**
  - **If electric wires are exposed inside or outside your vehicle, an electric shock may occur. Never touch exposed electric wires.**
  - **Do not touch the battery if liquid is leaking from or adhering to it.**
    If electrolyte (organic electrolyte) from the high voltage battery comes into contact with eyes or skin, it could cause blindness or skin wounds. In the event that it comes into contact with eyes or skin, wash it off immediately with a large amount of water, and seek immediate medical attention.
  - **If electrolyte is leaking from the high voltage battery, do not approach the vehicle.**
    In the event that the high voltage battery is damaged, the internal construction of the battery will prevent a large amount of electrolyte from leaking out. However, any electrolyte that does leak out will give off a vapor. This vapor is an irritant to skin and eyes and could cause acute poisoning if inhaled.
  - **Do not bring burning or high-temperature items close to the electrolyte. The electrolyte may ignite and cause a fire.**
  - **If a fire occurs in the hybrid vehicle, leave the vehicle as soon as possible. Never use a fire extinguisher that is not meant for electric fires. Using even a small amount of water may be dangerous.**
  - **Carefully inspect the ground under the vehicle. If you find that liquid has leaked onto the ground, the fuel system may have been damaged. Leave the vehicle as soon as possible.**
- **Never resell, hand over or modify the high voltage battery. To prevent accidents, hybrid batteries that have been removed from a disposed vehicle are collected through a SUBARU dealer. Do not dispose of the battery yourself. Unless the battery is properly collected, the following may occur, resulting in death or serious injury:**

– The high voltage battery may be illegally disposed of or dumped, and it is hazardous to the environment or someone may touch a high voltage part, resulting in an electric shock.
– The high voltage battery is intended to be used exclusively with your hybrid vehicle. If the high voltage battery is used outside of your vehicle or modified in any way, accidents such as electric shock, heat generation, smoke generation, explosion and electrolyte leakage may occur.
When reselling or handing over your vehicle, the possibility of an accident is extremely high because the person receiving the vehicle may not be aware of these dangers.

- If your vehicle is disposed of without the high voltage battery having been removed, there is a danger of serious electric shock if high voltage parts, cables and their connectors are touched. In the event that your vehicle must be disposed of, the high voltage battery must be disposed of by your SUBARU dealer. If the high voltage battery is not disposed of properly, it may cause electric shock that can result in death or serious injury.

NOTE

- High voltage parts and cables on the hybrid vehicles incorporate electromagnetic shielding. Therefore they emit approximately the same amount of electromagnetic waves as conventional gasoline powered vehicles or home electronic appliances.
- Your vehicle may cause sound interference in some third party-produced radio parts.
- The high voltage battery has a limited service life.
The high voltage battery capacity (the ability to hold a charge) reduces with time and use in the same way as other rechargeable batteries. The extent at which capacity reduces changes drastically depending on the environment (ambient temperature, etc.) and usage conditions, such as how the vehicle is driven and how the high voltage battery is charged. This is a natural characteristic of lithium-ion batteries, and is not a malfunction.
Also, even though the distance that can be driven using only the electric motor decreases when the high voltage battery capacity reduces, driveability does not significantly become worse.
- When the high voltage battery is extremely cold (below −30°C (−22°F)) under the influence of the outside temperature, it may not be possible to start the e-BOXER system. In this case, try to start the e-BOXER system again after the temperature of the high voltage battery increases due to the outside temperature increase.
- Do not place a ferromagnetic substance in the cargo area. It could have a negative impact on electric devices.

– CONTINUED –

■ High Voltage Battery and High Voltage Battery Air Intake

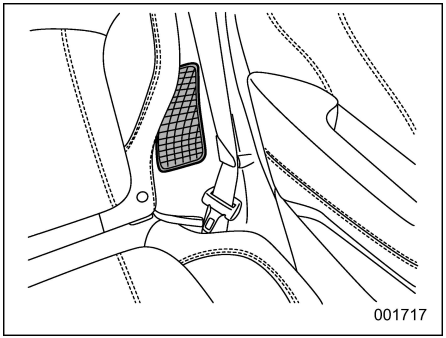

High voltage battery air intake

There is a high voltage battery air intake on the left side of the vehicle, near the rear seat for the purpose of cooling the high voltage battery. If the high voltage battery air intake become blocked, the high voltage battery may overheat, which will lead to a reduction in high voltage battery output.

⚠ CAUTION

- **Make sure not to block the high voltage battery air intake with anything, such as a plastic cover, or luggage. The high voltage battery may overheat and be damaged.**
- **Do not wet or allow foreign substances to enter the high voltage battery air intake as this may cause a short circuit and damage to the high voltage battery.**
- **Do not carry large amounts of water, such as water cooler bottles, in the vehicle. If water spills onto the high voltage battery, the battery may be damaged. We recommend that you have your vehicle inspected by your SUBARU dealer.**
- **Do not cover the high voltage battery air intake (located on the left next to the rear seat) with luggage or clothes. It is important that no liquids or any other substances or objects be allowed to enter the air intake. Please advise passengers in this area to use care around the air intake to prevent any debris from entering. Doing so may result in overheating or malfunctioning of the high voltage battery.**
- **Make sure to retract the seatbelts when they are not in use to prevent them from covering the high voltage battery air intake.**
- **If "High Voltage Battery Cooling Performance Reduced" and "Battery Air Cooling Filter Is Clogged Check Owner's Manual" are displayed on the combination meter display, check that nothing is blocking the battery air intake. If the message continues to be displayed when the high voltage battery air intake is not blocked, clean the high voltage battery air intake periodically to prevent it from clogging. Refer to "Cleaning the High Voltage Battery Air Intake" ☞P463.**
- **Clean the high voltage battery air intake periodically to prevent it from clogging. For details, refer to "Cleaning the High Voltage Battery Air Intake" ☞P463.**

■ Emergency Shut Off System

When a certain level of impact is detected by the impact sensor, the emergency shut off system blocks off the high voltage current and stops the fuel pump to minimize the risk of electrocution and fuel leakage. If the emergency shut off system activates, your vehicle will not restart. To

restart the e-BOXER system, we recommend that you contact your SUBARU dealer.

■ e-BOXER System Warning Message

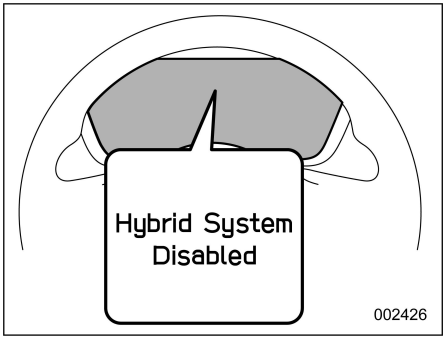

A message is automatically displayed when a malfunction occurs in the e-BOXER system or an improper operation is attempted.

If a warning message is shown on the combination meter display, read the message and follow the instructions.

NOTE

If a warning light comes on or a warning message is displayed, the e-BOXER system may not start. We recommend that you contact your SUBARU dealer.

Hybrid Vehicle Driving Tips

⚠ WARNING

- **Always start the e-BOXER system while sitting in the driver's seat. Do not depress the accelerator pedal while starting the e-BOXER system under any circumstances. Doing so may cause an accident resulting in death or serious injury.**
- **When restarting the e-BOXER system after an emergency shutdown while driving, press the ignition switch. When restarting the e-BOXER system after stopping the vehicle, change the select lever position to "P" and then press the ignition switch.**

For economical and ecological driving, pay attention to the following points.

- **Use of power meter**

Eco-friendly driving is possible by keeping the power meter within the Eco area. Refer to "Power Meter" ☞P175.

- **Select lever position operation**

Shift the select lever position to the "D" position when stopped at a traffic light, or when driving in heavy traffic.

Shift the select lever position to the "P" position when parking.

Selecting the "N" position has no positive effect on fuel consumption. In the "N" position, the gasoline engine operates but electricity cannot be generated. Also, when using the climate control system, etc., the high voltage battery power is consumed.

If the remaining power of the high voltage battery is low, the vehicle may become inoperable.

Even if you are able to drive the vehicle, the AWD system or EyeSight system may not function normally.

- **Accelerator pedal/brake pedal operation**
  - Drive your vehicle smoothly. Avoid abrupt acceleration and deceleration. Gradual acceleration and deceleration will make more effective use of the electric motor (traction motor) without having to use gasoline engine power.
  - Avoid repeated acceleration. Repeated acceleration consumes high voltage battery power, resulting in poor fuel consumption. Battery power can be restored by driving with the accelerator pedal slightly released.

– CONTINUED –

– Make sure to operate the brakes gently and in a timely manner when braking. A greater amount of electrical energy can be regenerated when slowing down.

- **Delays**

Repeated acceleration and deceleration, as well as long waits at traffic lights, will lead to high fuel and electricity consumption. Check traffic reports before leaving and avoid delays as much as possible. When driving in a traffic jam, gently release the brake pedal to allow the vehicle to move forward slightly while avoiding overuse of the accelerator pedal. Doing so can help control excessive electricity and fuel consumption.

- **Highway driving**

Control and maintain the vehicle at a constant speed. Before stopping at a toll booth or similar, allow plenty of time to release the accelerator and gently apply the brakes. A greater amount of electrical energy can be regenerated when slowing down.

Troubleshooting

■ When Messages Are Displayed

Messages related to the high voltage battery are displayed on the combination meter display. When this occurs, follow the instructions displayed on the screen.

Symptom	Likely cause	Correction procedure
If “Hybrid system Output Reduced” is displayed.	This message may appear while driving under severe operating conditions, not a malfunction. For example, when driving up a long steep hill or driving up a steep hill in reverse.	If this message is displayed, the e-BOXER system overheat warning light also illuminates at the same time. Refer to “e-BOXER System Overheat Warning Light” ☞P202.
If “High Voltage Battery Cooling Performance Reduced” and “Battery Air Cooling Filter Is Clogged Check Owner’s Manual” are displayed.	This message may appear if the high voltage battery cooling filter is clogged or the high voltage battery air intake is blocked or obstructed.	Clean the high voltage battery air intake to prevent it from clogging. Refer to “Cleaning the High Voltage Battery Air Intake” ☞P463.
If “High Voltage Battery Inspection Required See Your Retailer” is displayed.	The high voltage battery is scheduled to be inspected or replaced. If you continue to drive the vehicle without having the battery inspected, the e-BOXER system will eventually no longer start.	We recommend that you have your vehicle inspected by your SUBARU dealer.
If “High Voltage Battery Level Low” and “Charging Will Start after Shifting to Position Other Than N” are displayed.	The shift position is set to “N” for a certain period of time and the charge of the high voltage battery is low.	If you want to move the vehicle, set the shift position to “P” and restart the e-BOXER system.
If “No Driving” and “Check Owner’s Manual” are displayed.	A serious malfunction has occurred in the e-BOXER system that prevents the vehicle from running.	We recommend that you have your vehicle inspected by your SUBARU dealer.
If “Hybrid System Disabled” is displayed.	The e-BOXER system is in need of inspection.	We recommend that you have your vehicle inspected by your SUBARU dealer.

NOTE

If you see a message other than any of the above and the problem persists, we recommend that you contact your SUBARU dealer.

Seat, Seatbelt and SRS Airbags

1-1. Front Seats 48
Manual Seat (If Equipped) 50
Power Seat (If Equipped) 51
Driver's Seat Memory Function (If Equipped) 52
Head Restraint Adjustment 57
1-2. Rear Seats 58
Important Precautions about the e-BOXER System 59
Folding Down the Rear Seatback 59
Reclining the Seatback 61
Head Restraint Adjustment 62
Armrest 64
1-3. Seat Heater (If Equipped) 65
Front Seat Heater 65
Rear Seat Heater (If Equipped) 65
1-4. Seat Ventilation (If Equipped) 66
1-5. Seatbelts 67
Seatbelt Safety Tips 67
Emergency Locking Retractor (ELR) 69
Seatbelt Warning Light and Chime 69
Rear Seatbelt Warning Light and Chime 69
Fastening the Seatbelt 69
Seatbelt Maintenance 75
1-6. Seatbelt Pretensioners 75
Seatbelt with Shoulder Belt Pretensioner 76
Seatbelt with Shoulder Belt and Lap Belt Pretensioners 77
System Monitors 77
System Servicing 77
Precautions against Vehicle Modification 78
1-7. Rear Seat Reminder 78
1-8. Child Restraint Systems 79
Safety Precautions 79
Safety Tips for Installing Child Restraint Systems 80
Choosing a Child Restraint System 82
When Installing the Forward Facing Child Restraint System on the Front Passenger's Seat 85
Installing Child Restraint Systems with Seatbelt 86
Installing a Booster Seat or Booster Cushion 90
Installation of Child Restraint Systems Using ISOFIX Anchor Bars 92
Top Tether Anchorages 94
1-9. SRS Airbag (Supplemental Restraint System Airbag) 96
General Precautions Regarding SRS Airbag System 96
General Precautions Regarding SRS Airbag System for Accessories and Any Objects 98
General Precautions Regarding SRS Airbag System and Children 101
Components 104
SRS Airbag 108
System Operation 113
SRS Seat Cushion Airbag Operation 118
SRS Side Airbag, SRS Far-Side Airbag (If Equipped) and SRS Curtain Airbag Operation 119
SRS Airbag System Monitors 123
SRS Airbag System Servicing 123
Precautions against Vehicle Modification 124

1-1. Front Seats

WARNING

- **Never adjust the seat while driving, as it may cause loss of vehicle control and personal injury.**
- **Before adjusting the seat, make sure the hands and feet of rear seat passengers and cargo are clear of the adjusting mechanism.**
- **After adjusting the seat, move it back and forth to make sure it is securely locked. If the seat is not securely locked, it may move or the seatbelt may not operate properly.**
- **Do not put objects under the front seats. They may interfere with front seat locking and cause an accident.**
- **Seatbelts provide maximum restraint when the occupant sits well back and upright in the seat. To reduce the risk of sliding under the seatbelt in a collision, the front seatbacks should be always used in the upright position while the vehicle is running. If the front seatbacks are not used in the upright position in a collision, the risk of sliding under the lap belt and of the lap belt sliding up over the abdomen will increase, and both can result in serious internal injury or death.**
- **The SRS airbags deploy with considerable speed and force. Occupants who are not seated in the proper upright position when the SRS airbag deploys could suffer very serious injuries. Because the SRS airbag needs enough space for deployment, the driver should always sit upright and well back in the seat as far from the steering wheel as practical while still maintaining full vehicle control, and the front passenger should move the seat as far back as possible and sit upright and well back in the seat.**

102831-M

WARNING

SUBARU strongly recommends that ALL infants and children (including those in child restraint systems) sit in the REAR seat properly restrained in a child restraint system or in a seatbelt, whichever is appropriate for the child's age, height and weight. The SRS airbag deploys with considerable speed and force and can injure or even kill children, especially if they are not restrained or improperly restrained. Because children are lighter and weaker than adults, their risk of being injured from deployment is greater. According to accident statistics, children are safer when properly restrained

in the rear seating positions than in the front seating positions. For instructions and precautions concerning child restraint systems, refer to "Child Restraint Systems" ☞P79.

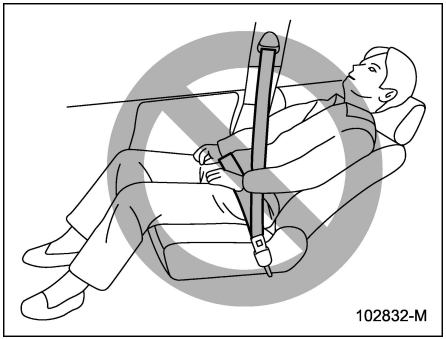

⚠ WARNING

To prevent the passenger from sliding under the seatbelt in the event of a collision, always put the seatback in the upright position while the vehicle is in motion. Also, do not place objects such as cushions between the passenger and the seatback. If you do so, the risk of sliding under the lap belt and of the lap belt sliding up over the abdomen will increase, and both can result in serious internal injury or death.

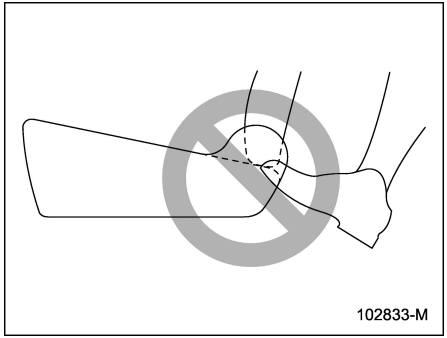

⚠ WARNING

Do not let rear passengers rest their feet between the front seatback and seat cushion. Doing so may interfere with the proper operation of the following systems and could result in serious injury.

- Occupant detection system
- SRS side airbag
- SRS seat cushion airbag
- SRS far-side airbag (if equipped)
- Front seat heater (if equipped)
- Power seat (if equipped)

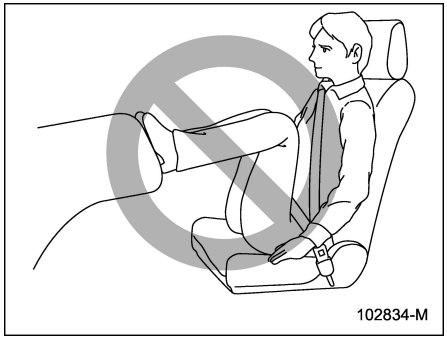

⚠ WARNING

Do not press your feet onto the instrument panel. Doing so may prevent the occupant detection function of the SRS airbag system and SRS airbag from functioning correctly. This may result in serious injury or death in the event of an accident.

– CONTINUED –

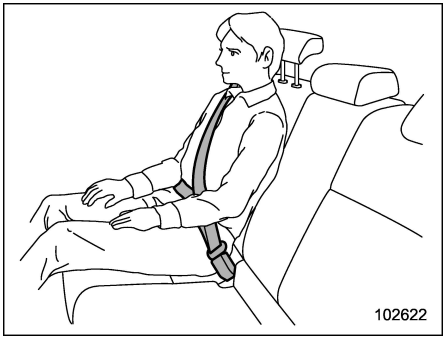

WARNING

Seatbelts provide maximum restraint when the occupant sits well back and upright in the seat. Do not put cushions or any other materials between occupants and seatbacks or seat cushions. If you do so, the risk of sliding under the lap belt and of the lap belt sliding up over the abdomen will increase, and both can result in serious internal injury or death.

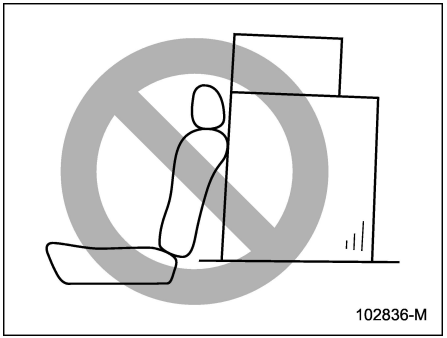

WARNING

Never stack luggage or other cargo higher than the top of the seatback because it could tumble forward and injure passengers in the event of a sudden stop or accident.

■ Manual Seat (If Equipped)

▼ Forward and backward adjustment

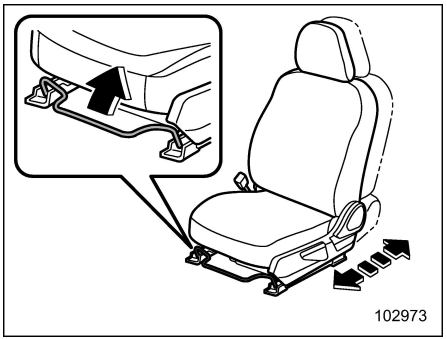

1. Sit in the seat to adjust.
2. Pull the lever upward, slide the seat to the desired position, and then release the lever.
3. Try to move the seat back and forth to make sure that it is securely locked into place.

▼ Reclining the seatback

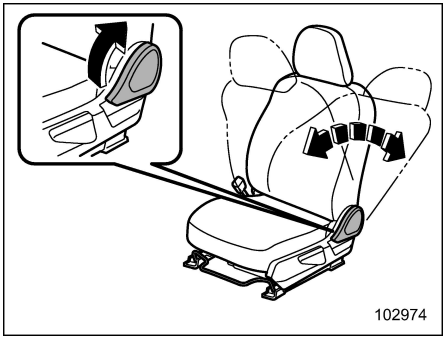

1. Pull up the reclining lever, adjust the seatback to the desired position, and then release the lever.
2. Make sure the seatback is securely locked into place.

The seatback placed in a reclined position can spring back upward with force when pulling the lever. While operating the lever to return the seatback, hold the seatback lightly so that it may be raised back gradually.

▼ Seat cushion height adjustment (driver's seat)

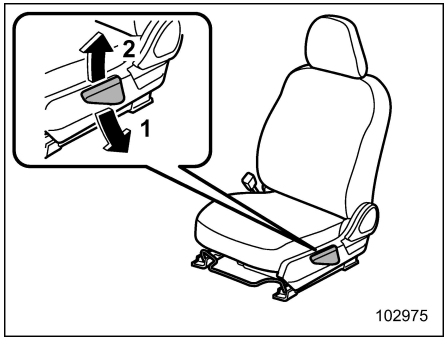

1 When the lever is pushed down, the seat is lowered.
2 When the lever is pulled up, the seat rises.

You can adjust the height of the seat by moving the seat cushion adjustment lever up or down.

■ Power Seat (If Equipped)

▼ Driver's seat

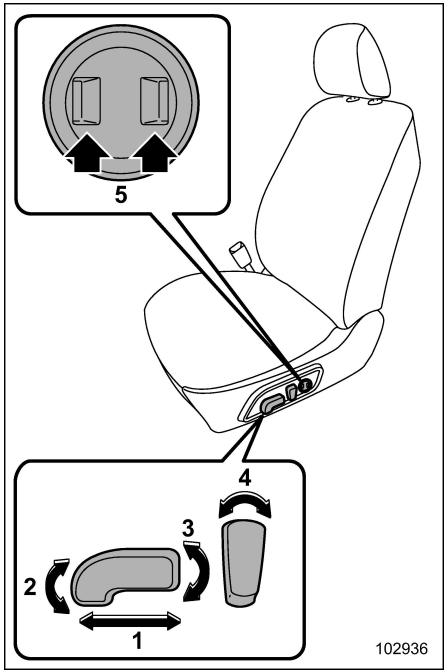

1 **Seat position forward/backward control switch**
To adjust the seat forward or backward, move the control switch forward or backward. During forward/backward ad-

– CONTINUED –

justment of the seat, you cannot adjust the seat cushion angle or seat cushion height.

2 **Seat cushion angle control switch**
To adjust the seat cushion angle, pull up or push down the front end of the control switch.

3 **Seat height control switch**
To adjust the seat height, pull up or push down the rear end of the control switch.

4 **Seatback angle (reclining) control switch**
To adjust the angle of the seatback, move the control switch.

5 **Lumbar support control switch**
To increase lower back support, push the front side of the switch. To decrease lower back support, push the rear side of the switch.

▼ **Front passenger's seat**

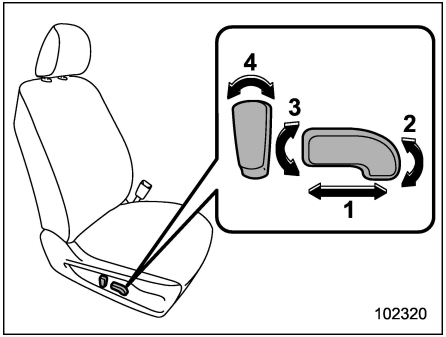

1 **Seat position forward/backward control switch**
To adjust the seat forward or backward, move the control switch forward or backward.

2 **Seat cushion angle control switch**
To adjust the seat cushion angle, pull up or push down the front end of the control switch.

3 **Seat height control switch**
To adjust the seat height, pull up or push down the rear end of the control switch.

4 **Seatback angle (reclining) control switch**
To adjust the angle of the seatback, move the control switch.

■ Driver's Seat Memory Function (If Equipped)

⚠ WARNING

- **To avoid loss of vehicle control or personal injury, never perform the following operations while driving.**
  - **Adjusting the seat**
  - **Retrieving the seat position**
- **Before adjusting the seat, make sure that cargo or the hands and feet of rear seat passengers are clear of the adjusting mechanism.**
- **Perform the seat position retrieval before driving. Be sure to confirm that the select lever is in the "P" position, and the parking brake is applied, when adjusting the seat position. Do not drive until the retrieval of the seat position is complete.**
- **When retrieving a registered seat position, make sure the hands, feet and possessions of rear seat passengers are clear of the seat adjusting mechanism.**
- **When any unusual conditions or malfunctions occur during the**

retrieval of the seat position, stop the retrieval of the seat position by performing any of the following.

- **Operate any of the power seat switches.**
- **Press the "SET" button.**
- **Press button "1" or "2".**
- **Operate the outside mirror control switch.**

Some seat positions can be registered. Register the seat position with button "1" or "2" or each of the key fobs and retrieve the seat position.

The following seat positions can be registered.

- Forward/backward position of the seat
- Angle of the seatback
- Angle of the seat cushion
- Height of the seat
- Angle of the outside mirrors
- Angle of the outside mirrors while the vehicle is in reverse

NOTE

The seat position can also be retrieved with the Driver Monitoring System user information. To do so, perform user registration in the Driver Monitoring System settings. Refer to "Using the Driver Monitoring System" ☞P396.

▼ Registration of memory position with button "1" or "2"

1. Adjust the seat position under the following conditions.
   - The parking brake is applied.
   - The ignition switch is in the "ON" position.
   - The select lever is in the "P" position.
2. Register the adjusted positions by either of the following procedures.
   - Press the "SET" button, then press either "1" or "2" until a chirp sounds within 5 seconds.
   - While pressing and holding the "SET" button, press either "1" or "2" until a chirp sounds within 5 seconds.

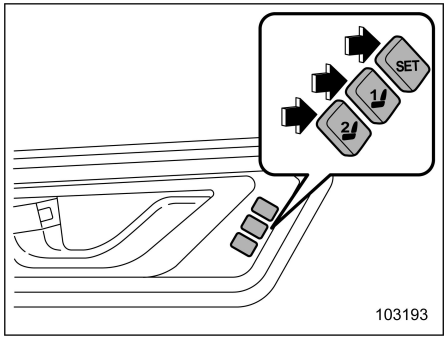

A chirp will sound once to signal that the following items were registered.

- Driver's seat position
- Both outside mirrors' angles
- Reverse tilt-down mirror angles (passenger's side only)

NOTE

If a new position is registered for the same button, the previously registered memory position is deleted.

▼ Registration of the reverse tilt-down mirror angle with button "1" or "2"

⚠ CAUTION

Depress the brake pedal when registering the reverse tilt-down mir-

– CONTINUED –

ror angle.

1. Move the select lever to the “R” position, then the outside mirror angle will move to the reverse tilt-down position.
2. Adjust the outside mirror angle. For details about the settings, refer to “Remote control mirror switch” ☞P265.
3. Move the select lever to the “P” position, then the outside mirror angle will return to its original position.
4. Register the adjusted positions by either of the following procedures.
   - Press the “SET” button, then press either “1” or “2” until a chirp sounds within 5 seconds.
   - While pressing and holding the “SET” button, press either “1” or “2” until a chirp sounds within 5 seconds.

A chirp will sound once to signal that the following items were registered.

- Driver’s seat position
- Both outside mirrors’ angles
- Reverse tilt-down mirror angles (passenger’s side only)

NOTE

The factory setting (default setting) for this function is set as the front passenger’s side mirror. The setting of the right and left side mirror/front passenger’s side mirror operation can be changed by a SUBARU dealer. We recommend that you contact your SUBARU dealer for details.

▼ Registration of memory position with a key fob

1. Adjust the seat position under the following conditions.
   - The parking brake is applied.
   - The ignition switch is in the “OFF” position.
   - The select lever is in the “P” position.
2. Hold the access key fob and press and hold the “SET” button, then press the “🔓” button of the access key fob.

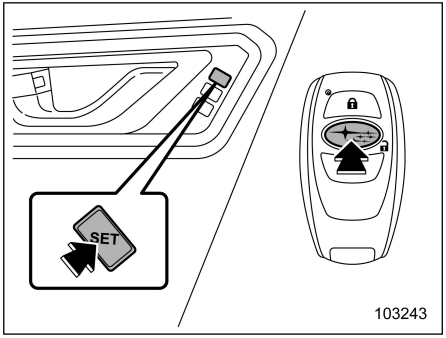

A chirp will sound once to signal that the following items were registered.

- Driver’s seat position
- Both outside mirrors’ angles
- Reverse tilt-down mirror angles (passenger’s side only)

NOTE

When registering the seat position, carry the access key that you want to register with you. If you are carrying 2 or more access keys, registration may not be possible.

▼ **Registration of the reverse tilt-down mirror angle with the key fob**

⚠ CAUTION

Depress the brake pedal when registering the reverse tilt-down mirror angle.

1. Move the select lever to the “R” position, then the outside mirror angle will move to the reverse tilt-down position.
2. Adjust the outside mirror angle. For details about the settings, refer to “Remote control mirror switch” ☞P265.
3. Move the select lever to the “P” position, then the outside mirror angle will return to its original position.
4. Turn the ignition switch to the “OFF” position.
5. Hold the access key fob and press and hold the “SET” button, then press the “🔒” button of the access key fob.

A chirp will sound once to signal that the following items were registered.

- Driver’s seat position
- Both outside mirrors’ angles
- Reverse tilt-down mirror angles (passenger’s side only)

NOTE

- **The factory setting (default setting) for this function is set as the front passenger’s side mirror. The setting of the right and left side mirror/front passenger’s side mirror operation can be changed by a SUBARU dealer. We recommend that you contact your SUBARU dealer for details.**
- **The system stores the adjusted mirror angle for approximately 45 seconds after the ignition switch is turned to the “OFF” position. Register the mirror angle while the memory function is available.**

▼ **Retrieval of memory position registered with button “1” or “2”**

⚠ WARNING

Be sure to press the correct button to retrieve your registered seat position. If the seat position is not optimum for you, it may adversely affect your driving and may reduce the effectiveness of the seatbelt. That could result in an accident involving serious injury or death.

1. Turn the ignition switch to the “ON” position.
2. Put the select lever is in the “P” position and apply the parking brake, then press button “1” or “2”.

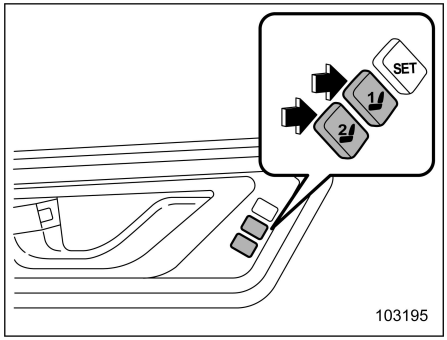

A chirp will sound and the seat and outside mirror move to the registered position.

When the select lever is moved to the “R” position, the outside mirror will move to the registered reverse tilt-down position.

NOTE

- **If the 12 V battery is removed, the registered memory position data will not be deleted.**
- **When the button “1” or “2” is pressed within 45 seconds after the driver’s door is opened, the registered memory position can be retrieved even if the ignition switch is in the “OFF” position.**

– CONTINUED –

- **If buttons “1” and “2” are pressed at the same time, execution of seat position retrieval may not be possible.**
- **When the retrieved position is the same as the current seat position, a chirp will sound twice.**

▼ Retrieval of the memory position registered with access key fob

1. Hold the registered access key fob.
2. Unlock the driver’s door by pressing the “🔓” button or touching the sensor behind the door handle.

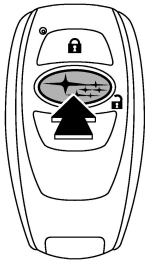

101978

3. Open the driver’s door.

A chirp will sound and the seat and angle of the outside mirrors moves to the registered position.

When the select lever is moved to the “R” position, the outside mirror will move to the registered reverse tilt-down position.

NOTE

- **A retrieved seat position might deviate as the function is used continuously over time.**
- **A retrieved seat position might deviate if you attempt to continue operating the registered seat in the same direction when the registered seat is already at the farthest possible point of adjustment in any direction.**
- **If the registered memory position cannot be retrieved after performing the previous procedures, try the following procedures.**
  (1) Press the “SET” button on the driver’s door.
  (2) Press the “🔒” button on the access key fob or the door lock button to lock the doors.
  (3) Perform the prior procedures again.
- **If the keyless access function is disabled, the memory position cannot be retrieved by touching the sensor behind the driver’s door handle. However, the memory position can still be retrieved by pressing the “🔓” button on the access key fob. For information about how to enable/disable the keyless access function, refer to “Disabling Keyless Access Function” ☞P138.**
- **If a new position is registered for the same access key fob, the previously registered memory position data will be deleted.**
- **If you are carrying 2 or more access keys, seat position retrieval may not be possible.**
- **If, while carrying an access key, 45 seconds passed after you enter the operating range of the keyless access function, it may not be possible to retrieve the registered memory position even if the door is open. For the operating range of the keyless access function, refer to “Locking and Unlocking by Holding the Access Key Fob” ☞P131.**

▼ Clearing the registered seat position with access key fob

1. Close the driver’s door.
2. Hold the access key fob and press and hold the “SET” button, then press the “🔒” button on the access key fob.

A chirp will sound, and the registered seat position and outside mirror angle on the

passenger's side will be cleared.

NOTE

After deleting the seat position, wait for a few moments before registering a new seat position.

■ Head Restraint Adjustment

⚠ WARNING

- **Never drive the vehicle with the head restraints removed because they are designed to reduce the risk of serious neck injury in the event that the vehicle is struck from the rear. Also, never install the head restraints the opposite way round. Doing so will prevent the head restraints from functioning as intended. Therefore, when you remove the head restraints, you must reinstall all head restraints correctly to protect vehicle occupants.**
- **All occupants, including the driver, should not operate a vehicle or sit in a vehicle's seat until the head restraints are placed in their proper positions in order to minimize the risk of neck injury in the event of a crash.**
- **The front seat head restraints are designed to be installed into the front seats only. The rear seat head restraints are designed to be installed into the rear seats only. Do not attempt to install the front seat head restraints into the rear seats, or the rear seat head restraints into the front seats.**

Both the driver's seat and front passenger's seat are equipped with head restraints. Both head restraints are adjustable in the following ways.

▼ **Head restraint height adjustment**

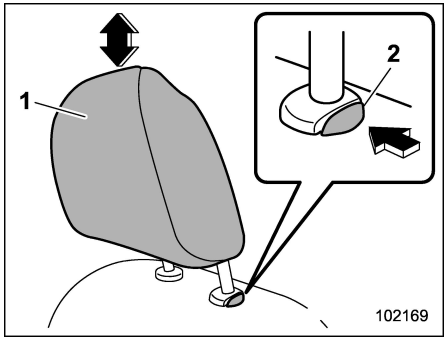

1 Head restraint
2 Release button

To raise:

Pull the head restraint up.

To lower:

Push the head restraint down while pressing the release button on the top of the seatback.

To remove:

While pressing the release button, pull out the head restraint.

To install:

Install the head restraint into the holes that are located on the top of the seatback until the head restraint locks. Press and hold the release button to lower the head restraint.

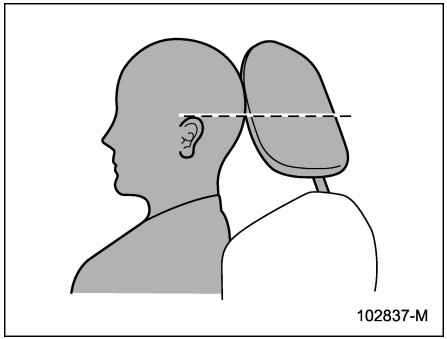

Each head restraint should be adjusted so that the center of the head restraint is closest to the top of the occupant's ears.

– CONTINUED –

NOTE

When the head restraint cannot be pulled out or installed due to insufficient clearance between the head restraint and the roof, tilt the seat and then perform the installation and removal tasks.

1-2. Rear Seats

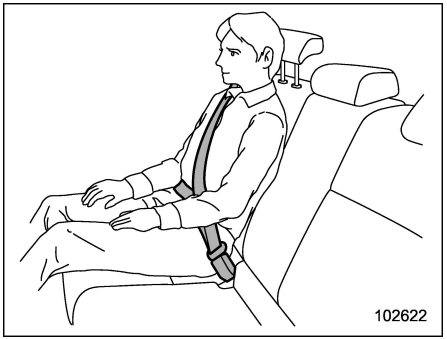

WARNING

Seatbelts provide maximum restraint when the occupant sits well back and upright in the seat. Do not put cushions or any other materials between occupants and seatbacks or seat cushions. If you do so, the risk of sliding under the lap belt and of the lap belt sliding up over the abdomen will increase, and both can result in serious internal injury or death.

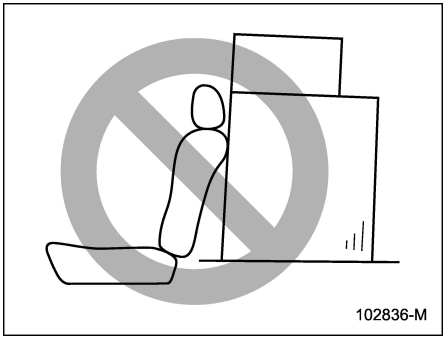

WARNING

Never stack luggage or other cargo higher than the top of the seatback because it could tumble forward and injure passengers in the event of a sudden stop or accident.

Important Precautions about the e-BOXER System

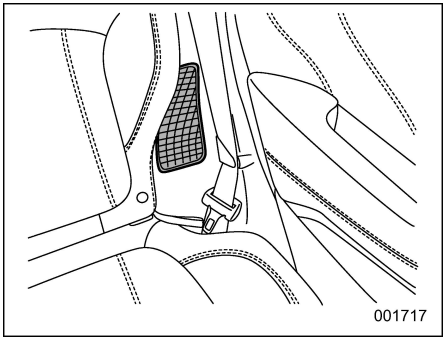

High voltage battery air intake

CAUTION

The high voltage battery air intake is located next to the rear seat on the left. Conform to the following instructions to prevent overheating of the high voltage battery or malfunction of the e-BOXER system.

- **Do not put any objects near the high voltage battery air intake.**
- **Clean the high voltage battery air intake periodically to prevent it from clogging.**
- **Make sure to retract the seatbelts when they are not in use to prevent them from covering the high voltage battery air intake.**
- **It is important that no liquids or any other substances or objects be allowed to enter the air intake. Advise passengers in this area to use care around the air intake to prevent any debris from entering.**
- **If water or any objects enter it, it may malfunction. When a large amount of water or any objects enter it, contact your SUBARU dealer for inspection.**

Folding Down the Rear Seatback

WARNING

- **When you fold down the seatback, check that there are no passengers or objects on the rear seat. Not doing so creates a risk of injury or property damage if the seatback suddenly folds down.**
- **Never allow passengers to ride on the folded rear seatback or in the cargo area. Doing so may result in serious injury or death.**
- **Secure all objects and especially long items properly to prevent them from being thrown around inside the vehicle and causing serious injury during a sudden stop, a sudden steering maneuver or a rapid acceleration.**
- **When you return the seatback to its original position, shake the seatback slightly to confirm that it is securely fixed in place. If the seatback is not securely fixed in place, the seatback may suddenly fold down in the event of sudden braking, or objects may move out from the cargo area, which could cause serious injury or death.**

– CONTINUED –

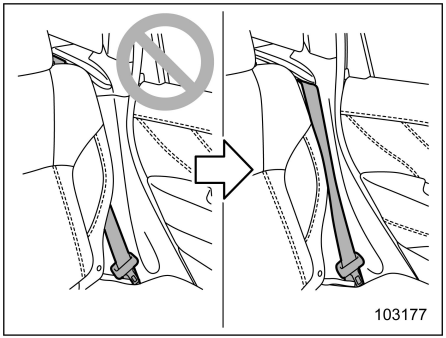

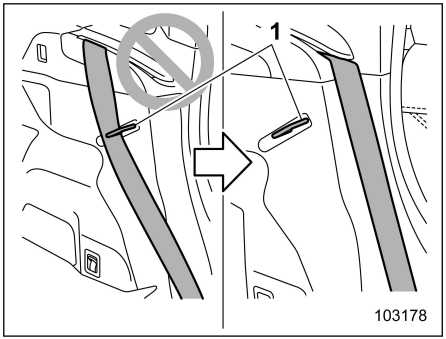

1 Striker

WARNING

When the seatback is returned to its original position, observe the following precautions. Failure to do so may lead to serious injury or an accident because the operation efficiency of the seatbelt is inhibited.

- **The seatbelt should not be caught in the seatback and it should be fully visible.**
- **The seatbelt should not pass behind the striker for the seatback.**

CAUTION

Do not hang luggage etc. on the striker. The possibility exists that the seatback may not be able to be fixed firmly in place. This could lead to unexpected accidents

▼ Folding down the rear seatback

1. Lower the head restraint of the rear center seating position.

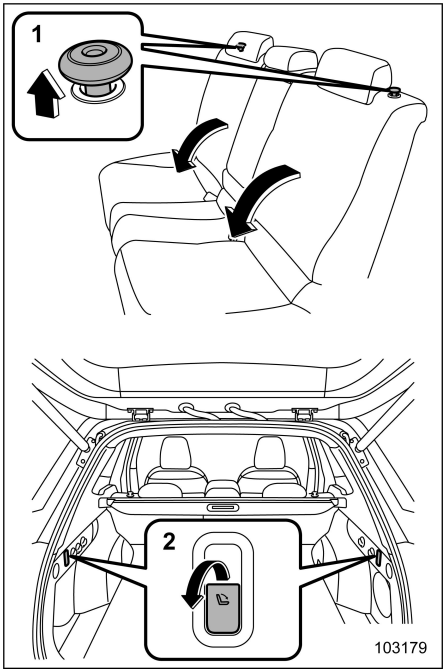

1 Release knob
2 Release lever

2. Unlock the seatback by pulling the lock

release knob or release lever and then fold the seatback down.

▼ **Return the rear seatback**

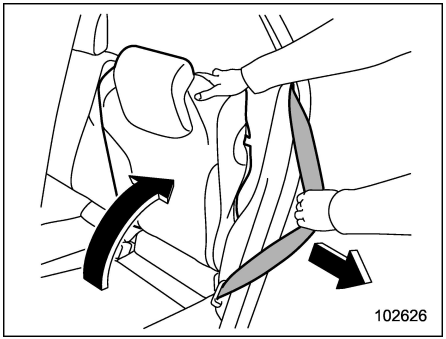

WARNING

- **When returning the seatback to its original position, observe the following precaution.**

  Failure to observe the precaution may damage the seatbelt, impairing its effectiveness, and possibly result in a serious injury.
- **When returning the seatback to its original position, pull the seatbelt out towards the vehicle exterior so that it will not be caught between the seatback and the trim.**

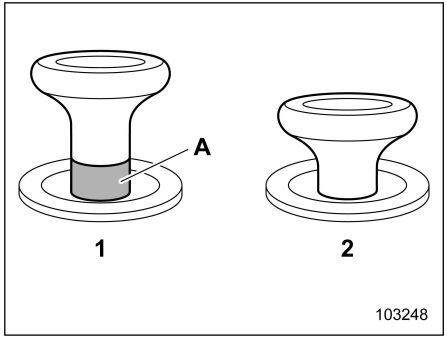

Lock release knob
1 Unlocked
2 Locked
A Unlocking marker in red

To return the seatback to its original position, raise the seatback until it locks into place and make sure that the unlocking marker on the lock release knob is no longer visible.

WARNING

When you return the seatback to its original position, check that the unlocking marker on the lock release knob is not visible. Also, shake the seatback slightly to confirm that it is securely fixed in place. If the seatback is not securely fixed in place, the seatback may suddenly fold down in the event of sudden braking, or objects may move out from the cargo area, which could cause serious injury or death.

■ Reclining the Seatback

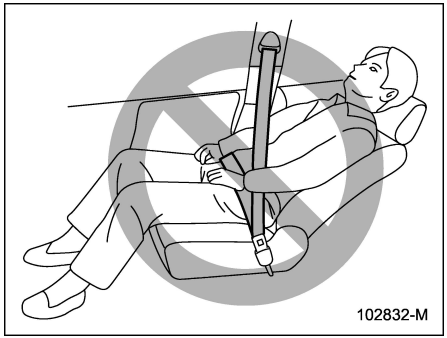

WARNING

To prevent the passenger from sliding under the seatbelt in the event of a collision, observe the following precautions:

- **Keep the seatback in the upright position while the vehicle is in motion.**

– CONTINUED –

- **Do not place objects such as cushions between the passenger and the seatback.**

Otherwise, the risk of sliding under the lap belt and of the lap belt sliding up over the abdomen will increase, and both can result in serious internal injury or death.

⚠ CAUTION

If your vehicle is equipped with a cargo area cover, observe the following precautions.

- **Be careful not to pinch your hand between the head restraint and the cargo area cover when you recline the rear seat.**
- **Move the front cover of the cargo area cover backward so that the cover is not damaged by the reclined seatback. Refer to "Cargo Area Cover" ☞P307.**

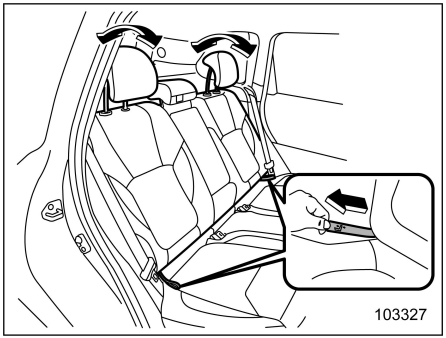

Pull the strap and adjust the seatback to the desired position.

Then release the strap and move the seatback back and forth to confirm that it is securely fixed in place.

■ Head Restraint Adjustment

Both the rear window side seats and the rear center seat are equipped with head restraints.

⚠ WARNING

- **Never drive the vehicle with the head restraints removed because they are designed to reduce the risk of serious neck injury in the event that the vehicle is struck from the rear. Therefore, when you have removed the head restraints, you must reinstall all head restraints to protect vehicle occupants.**
- **All occupants, including the driver, should not operate a vehicle or sit in a vehicle's seat until the head restraints are placed in their proper positions in order to minimize the risk of neck injury in the event of a crash.**
- **The front seat head restraints are designed to be installed into the front seats only. The rear seat head restraints are designed to be installed into the rear seats only. Do not attempt to install the front seat head restraints into the rear seats, or the rear seat head restraints into the front seats.**

▼ **Rear window side seating position**

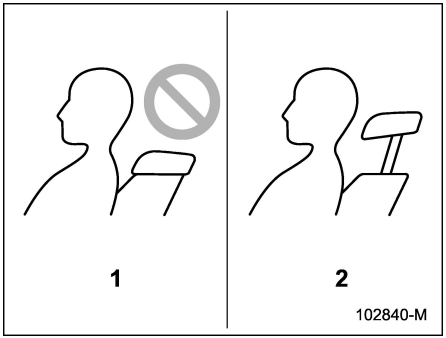

1 When not used (retracted position)
2 When used (extended position)

⚠ CAUTION

The head restraint is not intended to be used in the retracted position.

Before sitting on the seat, raise the head restraint to the extended position.

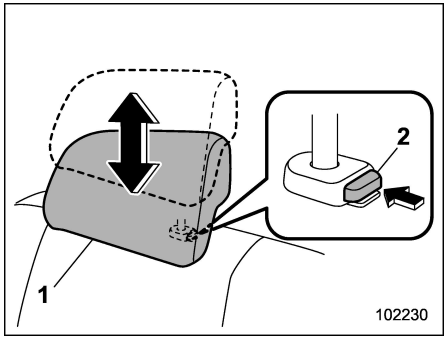

1 Head restraint
2 Release button

To raise:

Pull the head restraint up.

To lower:

Push the head restraint down while pressing the release button on the top of the seatback.

To remove:

While pressing the release button, pull out the head restraint.

To install:

Install the head restraint into the holes that are located on the top of the seatback until the head restraint locks. Press and hold the release button to lower the head restraint.

The head restraint should be adjusted so that the center of the head restraint is closest to the top of the occupant's ears.

When the seats are not occupied, lower the head restraints to improve rearward visibility.

▼ **Rear center seating position**

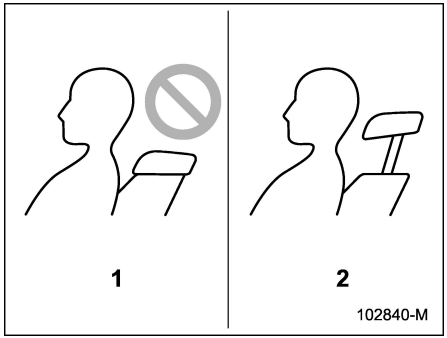

1 When not used (retracted position)
2 When used (extended position)

⚠ CAUTION

The head restraint is not intended to be used in the retracted position. Before sitting on the seat, raise the head restraint to the extended position.

– CONTINUED –

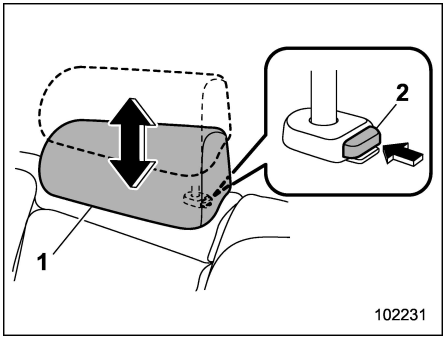

1 Head restraint
2 Release button

To raise:

Pull the head restraint up.

To lower:

Push the head restraint down while pressing the release button on the top of the seatback.

To remove:

While pressing the release button, pull out the head restraint.

To install:

Install the head restraint into the holes that are located on the top of the seatback until the head restraint locks. Press and hold the release button to lower the head restraint.

When the rear center seating position is occupied, raise the head restraint to the extended position. When the rear center seating position is not occupied, lower the head restraint to improve rearward visibility.

■ Armrest

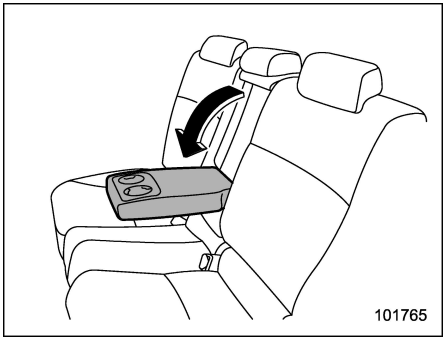

To lower the armrest, pull on the top edge of the armrest.

⚠ WARNING

- **Make sure the rear passengers wear their seatbelts before lowering the armrest. If the rear passengers wear the seatbelts after lowering the armrest, the seatbelts cannot provide maximum restraint, which may result in serious injuries.**
- **To avoid serious injury and vehicle damage, passengers must never be allowed to sit on the center armrest.**

1-3. Seat Heater (If Equipped)

The seat heater operates when the ignition switch is in the “ON” position.

CAUTION

- **Do not put hard or heavy objects or ones with protrusions on the seat, and do not stab the seat with sharp objects, such as pins or needles.**
- **People with delicate skin may suffer slight burns even at low temperatures if they use the seat heater for a long period of time. When using the heater, always be sure to warn the persons concerned.**
- **Do not put anything on the seat which insulates against heat, such as a blanket, cushion, or similar items. This may cause the seat heater to overheat.**
- **When the seat is warmed enough or before you leave the vehicle, be sure to turn off the seat heater.**

NOTE

Use of the seat heater for a long period of time while the e-BOXER system is not running can cause battery discharge.

■ Front Seat Heater

Adjust the front seat heater function on the center information display.

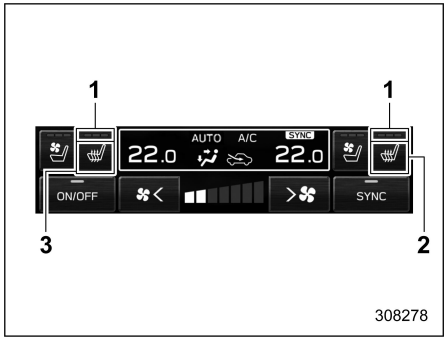

1 Seat heater indicator
2 Right side seat heater icon
3 Left side seat heater icon

Touch the left side/right side seat heater icon on the climate control screen. Each time you touch the icon, the mode will change as follows.

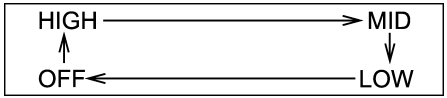

HIGH:
3 indicator lights are illuminated.
MID:
2 indicator lights are illuminated.
LOW:
1 indicator light is illuminated.
OFF:
All indicator lights turn off.

Selecting HIGH mode will cause the seat to heat up quicker.
Holding and releasing the seat heater icon turns the seat heater off in any mode.

NOTE

The front seat heater function cannot be used simultaneously with the seat ventilation (if equipped).

■ Rear Seat Heater (If Equipped)

CAUTION

Do not open and close the center console lid while operating the rear seat heater switch. There is the risk of fingers being caught in the lid.

– CONTINUED –

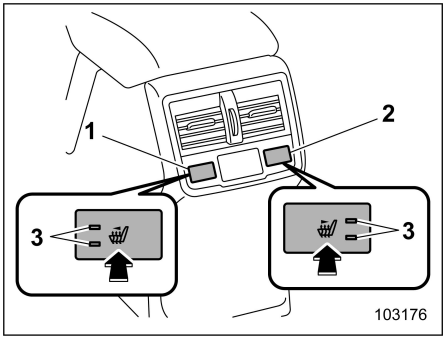

1 Left side
2 Right side
3 Indicator lights

Press the rear seat heater switch. Each time you press the switch, the mode will change as follows.

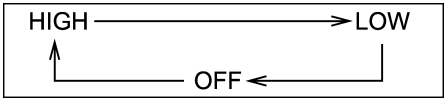

HIGH:
2 indicator lights are illuminated.
LOW:
1 indicator light is illuminated.
OFF:
All indicator lights turn off.

Selecting “HIGH” mode will cause the seat to heat up quicker.

NOTE

Only the front seat heater switches retain the previous switch position even if the vehicle has restarted. The rear seat switch will reset.

1-4. Seat Ventilation (If Equipped)

The seat ventilation are equipped in the front seats.

The seat ventilation operate when the ignition switch is in the “ON” position.

CAUTION

- **Do not put hard or heavy objects or ones with protrusions on the seat, and do not stab the seat with sharp objects, such as pins or needles.**
- **When cleaning the seat, do not use organic solvents, such as thinner, benzene, or alcohol.**
- **If water or liquid is spilled on the seat, wipe it off with a dry cloth immediately.**

NOTE

- **Use of the seat ventilation for a long period of time while the engine is not running can cause battery discharge.**
- **The seat ventilation function cannot be used simultaneously with the front seat heater.**

- **When using for a long period of time, we recommend setting the seat ventilation to the MID or LOW position. Use the HIGH position for only quick cooling at the start of the function usage.**

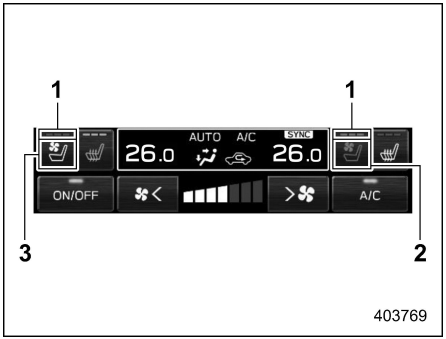

1 Seat ventilation indicator
2 Right-hand side seat ventilation icon
3 Left-hand side seat ventilation icon

Touch the left-hand side/right-hand side seat ventilation icon on the climate control screen.

Each time you touch the icon, the mode will change as follows.

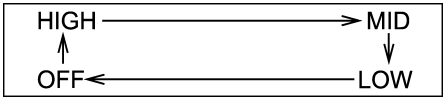

HIGH:
3 indicator lights are illuminated.
MID:
2 indicator lights are illuminated.
LOW:
1 indicator light is illuminated.
OFF:
All indicator lights turn off.

Holding and releasing the seat ventilation icon turns the seat ventilation off in any mode.

1-5. Seatbelts

■ Seatbelt Safety Tips

⚠ WARNING

- **All persons in the vehicle must fasten their seatbelts BEFORE the vehicle starts to move. Otherwise, the possibility of serious injury becomes greater in the event of a sudden stop or accident.**
- **All belts should fit snugly in order to provide full restraint. Loose fitting belts are not as effective in preventing or reducing injury.**
- **Each seatbelt is designed to support only one person. Never use a single belt for two or more persons – even children. Otherwise, in an accident, serious injury or death could result.**
- **Replace all seatbelt assemblies including retractors and attaching hardware worn by occupants of a vehicle that has been in a serious accident. The entire assembly should be replaced even if damage is not obvious.**

– CONTINUED –

- **When replacing a seatbelt, the new seatbelt must be type-approved and intended for installation in the same position as the replaced seatbelt.**
- **When wearing the seatbelt, insert the tongue plate into the correct buckle. Otherwise, in an accident, serious injury or death could result.**
- **Do not fasten your seatbelt with a child on your knees. Otherwise, in an accident, serious injury or death could result.**
- **Never use a belt that is twisted or reversed. In an accident, this can increase the risk or severity of injury.**
- **Keep the lap belt as low as possible on your hips. In a collision, this spreads the force of the lap belt over stronger hip bones instead of across the weaker abdomen.**
- **Seatbelts provide maximum restraint when the occupant sits well back and upright in the seat. To reduce the risk of sliding under the seatbelt in a collision, the front seatbacks should be always used in the upright position while the vehicle is running. If the front seatbacks are not used in the upright position in a collision, the risk of sliding under the lap belt and of the lap belt sliding up over the abdomen will increase, and both can result in serious internal injury or death.**
- **Do not put cushions or any other materials between occupants and seatbacks or seat cushions. If you do so, the risk of sliding under the lap belt and of the lap belt sliding up over the abdomen will increase, and both can result in serious internal injury or death.**

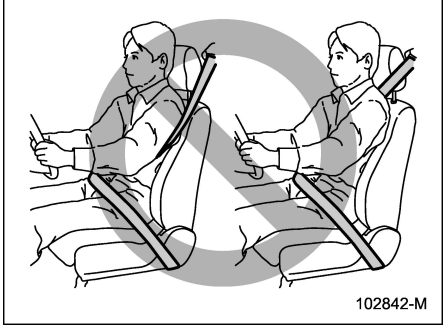

WARNING

Never place the shoulder belt under the arm or behind the back. If an accident occurs, this can increase the risk or severity of injury.

CAUTION

Metallic parts of the seatbelt can become very hot in a vehicle that has been closed up in sunny weather; they could burn an occupant. Do not touch such hot parts until they cool.

▼ Infants or small children

Use a child restraint system that is suitable for your vehicle. Refer to “Child Restraint Systems” ☞P79.

▼ Children

WARNING

SUBARU strongly recommends that ALL infants and children (including those in child restraint systems) sit in the REAR seat properly restrained in a child restraint system or in a seatbelt, whichever is appropriate for the child’s age, height and weight. The SRS airbag deploys with

considerable speed and force and can injure or even kill children, especially if they are not restrained or improperly restrained. Because children are lighter and weaker than adults, their risk of being injured from deployment is greater. According to accident statistics, children are safer when properly restrained in the rear seating positions than in the front seating positions. For instructions and precautions concerning child restraint systems, refer to "Child Restraint Systems" ☞P79.

If a child is too big for a child restraint system, the child should sit in the rear seat and be restrained using the seatbelts. Never allow a child to stand up or kneel on the seat.

Seatbelts are designed under the assumption that adult-sized occupants will use them. If the shoulder portion of the belt crosses the face or neck, move the child closer to the belt buckle to help provide a good shoulder belt fit. Care must be taken to securely place the lap belt as low as possible on the hips and not on the child's waist. If the shoulder portion of the belt cannot be properly positioned, a child restraint system should be used. Never place the shoulder belt under the child's arm or behind the child's back.

▼ **Expectant mothers**

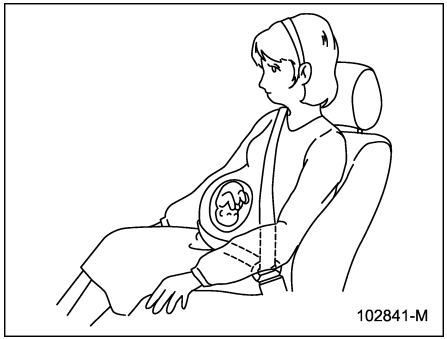

Expectant mothers also need to use the seatbelts. They should consult their doctor for specific recommendations. The lap belt should be worn securely and as low as possible over the hips, not over the waist.

■ Emergency Locking Retractor (ELR)

All seatbelts in the vehicle have an Emergency Locking Retractor (ELR).

The emergency locking retractor allows normal body movement but the retractor locks automatically during a sudden stop, impact or if you pull the belt very quickly out of the retractor.

■ Seatbelt Warning Light and Chime

Refer to "Seatbelt Warning Light and Chime" ☞P180.

■ Rear Seatbelt Warning Light and Chime

Refer to "Rear Seatbelt Warning Light and Chime" ☞P182.

■ Fastening the Seatbelt

▼ **Front seatbelts**

1. Adjust the seat position:

Driver's seat: Adjust the seatback to the upright position. Move the seat as far from the steering wheel as practical while still maintaining full vehicle control.

Front passenger's seat: Adjust the seatback to the upright position. Move the seat as far back as possible.

2. Sit well back in the seat.
3. Pick up the tongue plate and pull the belt out slowly. Do not let it get twisted.
   - If the belt stops before reaching the buckle, return the belt slightly and pull it out more slowly.
   - If the belt still cannot be unlocked, let the belt retract slightly after giving it a strong pull, then pull it out slowly

– CONTINUED –

again.

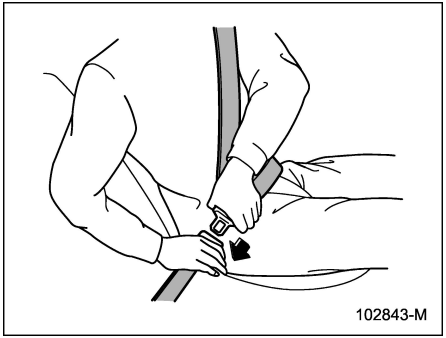

4. Insert the tongue plate into the buckle until you hear a click.

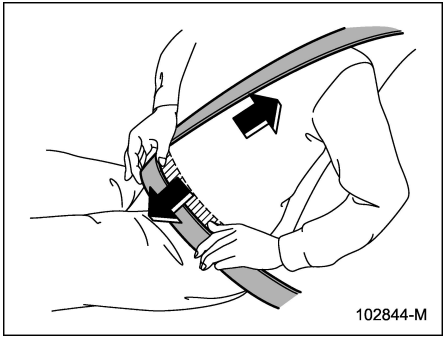

5. To make the lap part tight, pull up on the shoulder belt.

6. Place the lap belt as low as possible on your hips, not on your waist.

▽ Adjusting the front seat shoulder belt anchor height

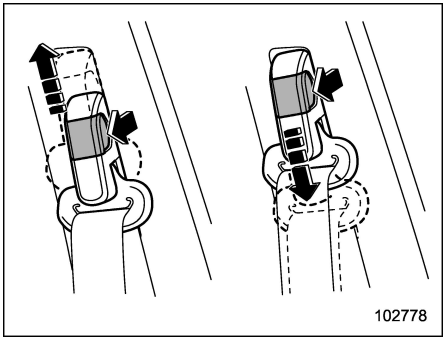

Adjust the shoulder belt anchor height to the position best suited for the driver/front passenger. Always adjust the anchor height so that the shoulder belt passes over the middle of the shoulder without touching the neck.

To raise:

Pull the release knob and slide the anchor up.

To lower:

Pull the release knob and slide the anchor down.

Pull down on the anchor to make sure that it is locked in place.

⚠ WARNING

When wearing the seatbelts, make sure the shoulder portion of the webbing does not pass over your neck. If it does, adjust the seatbelt anchor to a lower position. Placing the shoulder belt over the neck may result in neck injury during sudden braking or in a collision.

▽ Unfastening the seatbelt

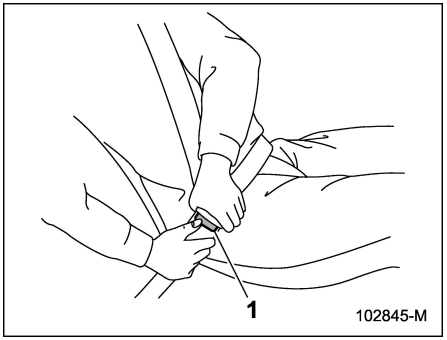

1 Button

1. Push the button on the buckle.
2. Have the seatbelt retracted slowly to

avoid the seatbelt being tangled or twisted.

Before closing the door, make sure that the belts are retracted properly to avoid catching the belt webbing in the door.

▼ Rear seatbelts (except rear center seatbelt)

1. Sit well back in the seat.
2. Pick up the tongue plate and pull the belt out slowly. Do not let it get twisted.
   - If the belt stops before reaching the buckle, return the belt slightly and pull it out more slowly.
   - If the belt still cannot be unlocked, let the belt retract slightly after giving a strong pull on it, then pull it out slowly again.

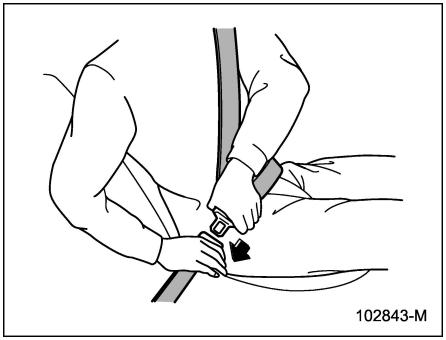

3. Insert the tongue plate into the buckle until you hear a click.

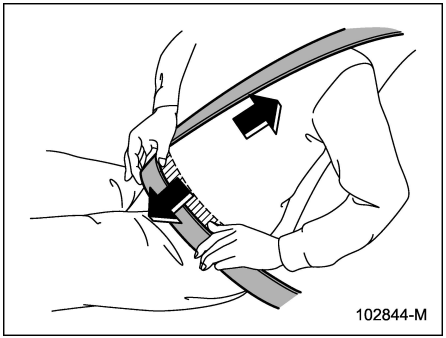

4. To make the lap part tight, pull up on the shoulder belt.
5. Place the lap belt as low as possible on your hips, not on your waist.

▽ Unfastening the seatbelt

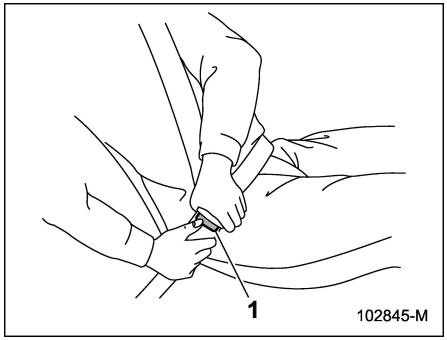

1 Button

1. Push the button on the buckle.
2. Have the seatbelt retracted slowly to avoid the seatbelt being tangled or twisted.

Before closing the door, make sure that the belts are retracted properly to avoid catching the belt webbing in the door.

– CONTINUED –

▼ Rear center seatbelt

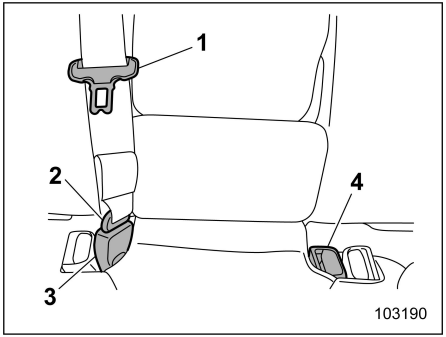

1 Center seatbelt tongue plate
2 Anchor tongue plate
3 Anchor buckle
4 Center seatbelt buckle

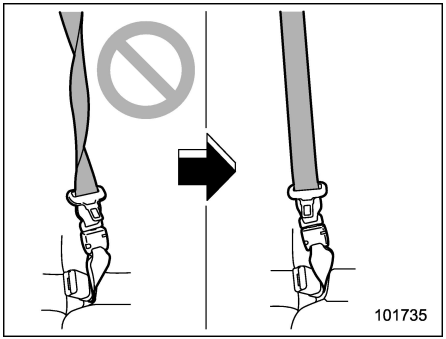

⚠ WARNING

Fastening the seatbelt with the webbing twisted can increase the risk or severity of injury in an accident. When fastening the belt after it is pulled out from the retractor, especially when inserting the anchor tongue plate into the mating buckle (on right-hand side), always check that the webbing is not twisted.

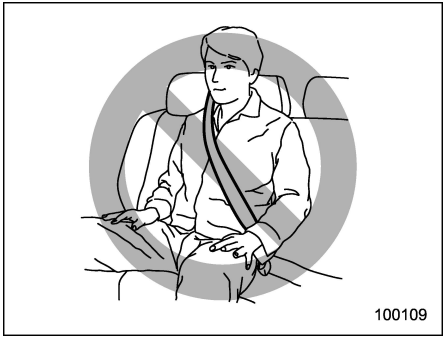

⚠ WARNING

- **Be sure to fasten both tongue plates to the respective buckles. If the seatbelt is used only as a shoulder belt (with the anchor tongue plate not fastened to the anchor buckle on the right-hand side), it cannot properly restrain the wearer in position in an accident, possibly resulting in serious injury or death.**
- **Before fastening the seatbelt, confirm that the seatbelt is routed through the belt guide. A seatbelt not routed through the belt guide can cause neck injuries during sudden braking or in a collision, since it may slip up on the neck.**

Rear center seatbelt is stowed in the recess of the ceiling.

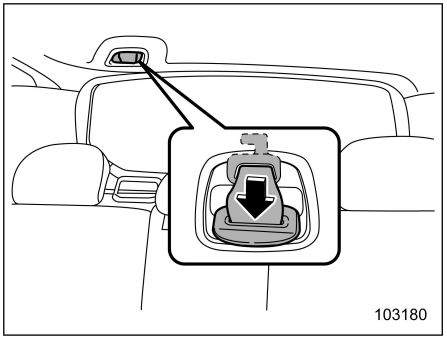

1. Retrieve the anchor tongue plate from the slot in the recess by pulling the anchor tongue plate, then pull out the

seatbelt slowly.

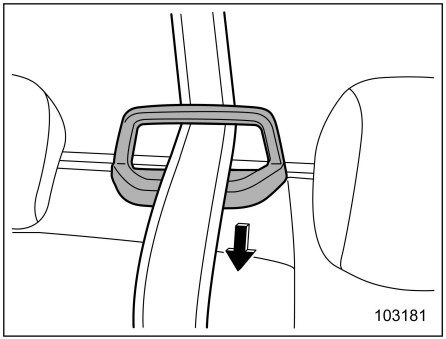

2. Pass the seatbelt through the belt guide.

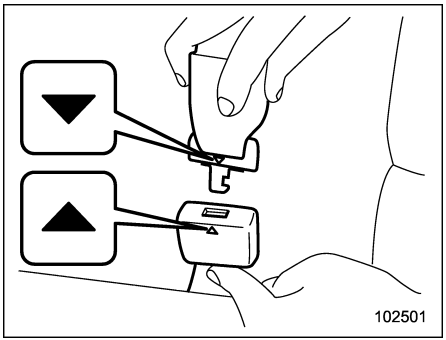

3. Make sure that the "▼" mark on the anchor tongue plate and the "▲" mark on the anchor buckle face outwards.

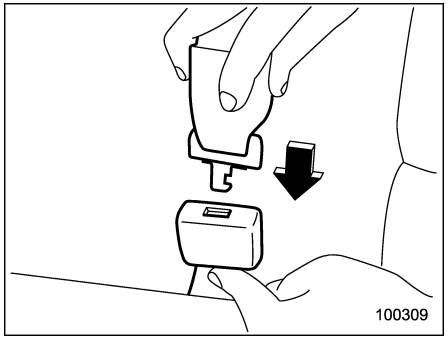

4. After confirming that the webbing is not twisted, insert the anchor tongue plate attached at the webbing end into the buckle on the right-hand side until a click is heard.
   - If the belt stops before reaching the buckle, return the belt slightly and pull it out more slowly.
   - If the belt still cannot be unlocked, let the belt retract slightly after giving it a strong pull, then pull it out slowly again.

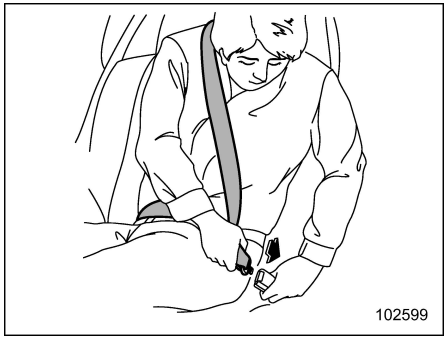

5. Insert the center seatbelt tongue plate into the center seatbelt buckle until it clicks.

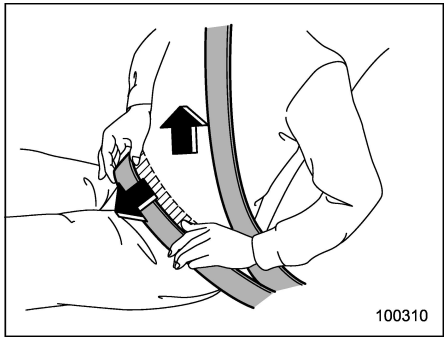

6. To make the lap part tight, pull up on the shoulder belt. And place the lap belt as low as possible on your hips,

– CONTINUED –

not on your waist.

▽ **Unfastening the seatbelt**

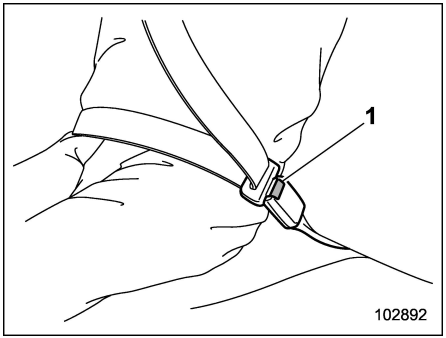

1 Button

1. Push the release button of the center seatbelt buckle (on the left-hand side) to unfasten the seatbelt.

NOTE

When the seatback is folded down for greater cargo area, it is necessary to disconnect the anchor tongue plate.

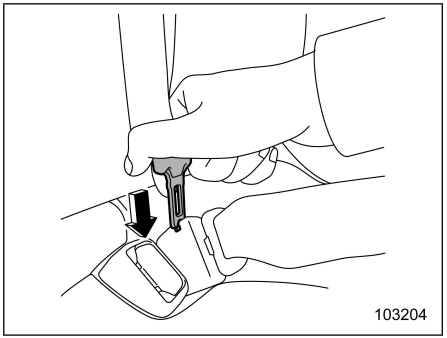

2. Insert a center seatbelt tongue plate or other hard pointed object into the slot in the anchor buckle on the right-hand side and push it in. The anchor tongue plate will then disconnect from the buckle.

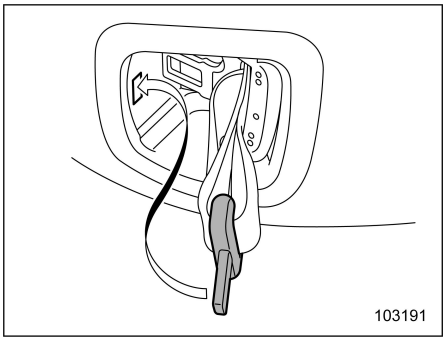

3. With the belt held by hand, allow the retractor to roll up the belt slowly. You should hold the webbing end and guide it back into the retractor while it is rolling up. Neatly store the tongue plate in the recess on the ceiling and then insert the anchor tongue plate into the slot located at the front of the recess.

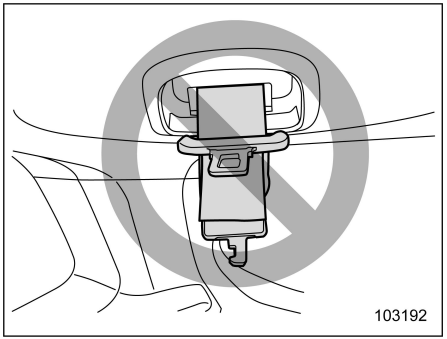

⚠ CAUTION

Observe the following precautions. Otherwise, the tongue plate can hit against the trim, causing damage to the trim.

- **Do not allow the retractor to roll up the seatbelt too quickly.**
- **Have the seatbelt fully rolled up so that the tongue plates are**

neatly stored.

■ Seatbelt Maintenance

To clean the seatbelts, use a mild soap and lukewarm water. Never bleach or dye the belts because this could seriously affect their strength.

Inspect the seatbelts and attachments including the webbing and all hardware periodically for cracks, cuts, gashes, tears, damage, loose bolts or worn areas. Replace the seatbelts even if only minor damage is found.

⚠ CAUTION

- **Keep the belts free of polishes, oils, chemicals and particularly battery acid.**
- **Never attempt to make modifications or changes that will prevent the seatbelt from operating properly.**

1-6. Seatbelt Pretensioners

The following seatbelts have a seatbelt pretensioner.

- Driver's seatbelt
- Front passenger's seatbelt
- Window-side rear passenger's seatbelts

The seatbelt pretensioners are designed to be activated in the event of an accident involving a moderate to severe frontal or side collision.

⚠ WARNING

- **To obtain maximum protection, the occupants should sit in an upright position with their seatbelts properly fastened. Refer to "Seatbelts" ☞P67.**
- **Do not modify, remove or strike the seatbelt retractor assemblies equipped with seatbelt pretensioners or surrounding area. This could result in accidental activation of the seatbelt pretensioners or could make the system inoperative, possibly resulting in serious injury. Seatbelt pretensioners have no user-serviceable parts. For required servicing of seatbelt retractors equipped with seatbelt pretensioners, we recommend that you consult your SUBARU dealer.**
- **When discarding seatbelt retractor assemblies equipped with seatbelt pretensioners or scrapping the entire vehicle due to collision damage or for other reasons, we recommend that you consult your SUBARU dealer.**

NOTE

- **Seatbelt pretensioners are not designed to activate in minor impacts or in rear impacts.**
- **The driver's and passenger's seatbelt pretensioners and SRS frontal airbags operate simultaneously. Even if the front passenger's SRS frontal airbag does not operate as the front passenger's seat is not occupied, the seatbelt pretensioner for the front passenger's seat will operate in combination with the driver's SRS frontal airbag/seatbelt pretensioner.**
- **Pretensioners are designed to function on a one-time-only basis. In the event that a pretensioner is acti-**

– CONTINUED –

vated, both the driver's and front passenger's seatbelt retractor assemblies should be replaced only by an authorized SUBARU dealer. When replacing seatbelt retractor assemblies, use only genuine SUBARU parts.

- **If a seatbelt that has a seatbelt pretensioner does not retract or cannot be pulled out due to a malfunction or activation of the pretensioner, we recommend that you contact your SUBARU dealer as soon as possible.**
- **If the seatbelt retractor assembly or surrounding area has been damaged, we recommend that you contact your SUBARU dealer as soon as possible.**
- **When you sell your vehicle, we urge you to inform the buyer that the vehicle is equipped with seatbelt pretensioners. Also, notify the buyer of the contents in this section.**

■ Seatbelt with Shoulder Belt Pretensioner

NOTE

This section is applicable to the following components.

- **Front passenger's seatbelt**
- **Window-side rear passenger's seatbelts**

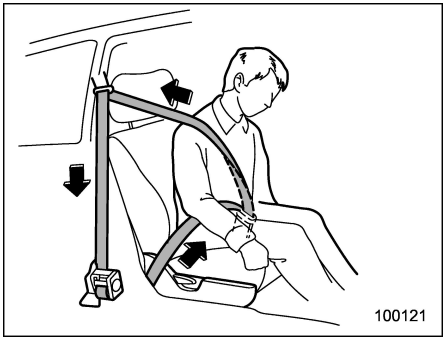

The pretensioner can also be activated by the following sensors.

- Front impact sensor
- Side impact sensor

If the sensor detects a certain predetermined amount of force during frontal or side collisions, any seatbelt that has a seatbelt pretensioner is quickly drawn back in by the retractor to take up the slack so that the belt more effectively restrains the seat occupant.

The window-side rear passenger's seatbelt pretensioner includes a tension reducing device that limits the peak forces exerted by the seatbelt on the occupant in the event of a collision.

The front passenger's seatbelt pretensioner includes a tension reducing device which limits the peak forces exerted by the seatbelt on the occupant in the event of a collision.

- Adaptive force limiter (if equipped)

The front passenger's side adaptive force limiter will select a reducing load to suit the body size of the occupant as detected by the occupant detection sensor.

When a seatbelt pretensioner is activated, an operating noise will be heard and a small amount of smoke will be released. These occurrences are normal and not harmful. This smoke does not indicate a fire in the vehicle.

Once the seatbelt pretensioner has been activated, the seatbelt retractor remains locked. Consequently, the seatbelt can not be pulled out and retracted and therefore must be replaced.

The front passenger's seatbelt pretensioner includes a tension reducing device which limits the peak forces exerted by the seatbelt on the occupant in the event of a collision. The front passenger's side adaptive force limiter will select a reducing load to suit the body size of the occupant as

detected by the occupant detection sensor.

■ Seatbelt with Shoulder Belt and Lap Belt Pretensioners

NOTE

This section is applicable to the driver's seatbelt.

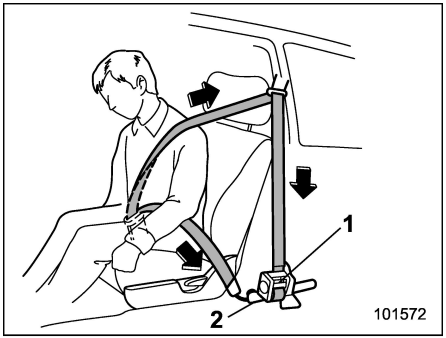

1 Seatbelt retractor assembly (shoulder belt pretensioner and adaptive force limiter (if equipped))
2 Lap belt pretensioner

The pretensioner can also be activated by the following sensors.

- Front impact sensor
- Side impact sensor

If the sensor detects a certain predetermined amount of force during frontal or side collisions, any seatbelt that has a seatbelt pretensioner is quickly drawn back in by the retractor to take up the slack so that the belt more effectively restrains the seat occupant.

The driver's seatbelt pretensioner includes a tension reducing device which limits the peak forces exerted by the seatbelt on the occupant in the event of a collision.

- Adaptive force limiter (if equipped)

The driver's side adaptive force limiter will select a reducing load to suit the body size of the occupant as detected by the driver's seat position sensor.

- When a seatbelt pretensioner is activated.

An operating noise will be heard and a small amount of smoke will be released. These occurrences are normal and not harmful. This smoke does not indicate a fire in the vehicle.

Once the seatbelt pretensioner has been activated, the seatbelt retractor remains locked. Consequently, the seatbelt cannot be pulled out and retracted and therefore must be replaced.

■ System Monitors

A diagnostic system continually monitors the readiness of the seatbelt pretensioner with the ignition switch in the "ON" position. The seatbelt pretensioners share the control module with the SRS airbag system. Therefore, if any malfunction occurs in a seatbelt pretensioner, the SRS airbag system warning light will illuminate. For details, refer to "SRS Airbag System Monitors" ☞P123.

■ System Servicing

⚠ WARNING

- **When discarding a seatbelt retractor assembly or scrapping the entire vehicle damaged by a collision, we recommend that you consult your SUBARU dealer.**
- **Tampering with or disconnecting the system's wiring could result in accidental activation of the seatbelt pretensioner and/or SRS airbag or could make the system inoperative, which may result in serious injury. Do not use electrical test equipment on any circuit related to the seatbelt pretensioner and SRS airbag sys-**

– CONTINUED –

tems. For required servicing of the seatbelt pretensioner, we recommend that you consult your nearest SUBARU dealer.

CAUTION

For the locations of the sensors and SRS airbag control module, refer to "Components" ☞P104.

If you need service or repair in those areas or near the seatbelt retractors, we recommend that you have the work performed by your authorized SUBARU dealer.

NOTE

If the front or side part of the vehicle is damaged in an accident to the extent that the seatbelt pretensioner does not operate, we recommend that you contact your SUBARU dealer as soon as possible.

■ Precautions against Vehicle Modification

We recommend that you consult your SUBARU dealer if you want to install any accessory parts to your vehicle.

CAUTION

Do not perform any of the following modifications. Such modifications can interfere with proper operation of the seatbelt pretensioners.

- **Attachment of any equipment (bush bar, bull bar, winches, snow plow, skid/sump plate, etc.) to the front end other than genuine SUBARU accessory parts or parts that match the quality of genuine SUBARU accessory parts.**
- **Modification of the suspension system or front end structure.**
- **Installation of a tire of different size and construction from the tires specified on the vehicle placard attached to the driver's door pillar or specified for individual vehicle models in this Owner's Manual.**

1-7. Rear Seat Reminder

This function prompts the driver to confirm the presence of passengers and cargo in the rear.

This function will be activated when the rear doors are opened and closed.

It alerts the driver by warning messages on the combination meter display and beeps when the ignition switch is turned from the "ON" position to the "OFF" position.

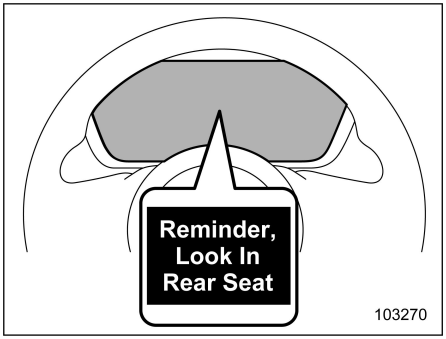

NOTE

- **This function does not directly detect passengers and cargo in the rear seat.**
- **This function detects the opening and closing of the rear doors. In this situation, there is the possibility that**

the following phenomenon may occur.
  - It may alert the driver even if there are no passengers or cargo in the rear seat.
  - It may not alert the driver even if there are passengers and cargo in the rear seat.
- This function can be set to on or off by "Car settings". For details, refer to "Car settings" ☞P229.
- The ON/OFF setting will not be changed even if the ignition switch is turned to the "OFF" position.
- The ON/OFF setting will be returned to the default setting if the battery is removed.

1-8. Child Restraint Systems

■ Safety Precautions

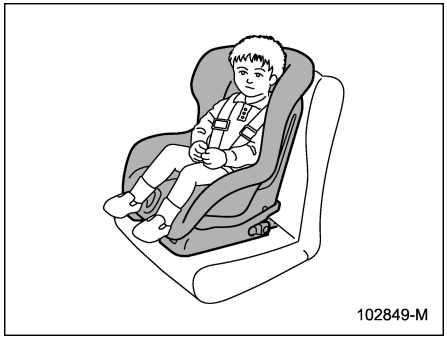

Infants and children should be placed in an infant or child restraint system on the rear seat while riding in the vehicle. You should use an infant or child restraint system that is appropriate for the child's age and size. All child restraint systems are designed to be secured in the vehicle seats. Children could be endangered in an accident if their child restraint systems are not properly secured in the vehicle.

When installing the child restraint system, carefully follow the manufacturer's instructions. According to accident statistics, children are safer when properly restrained in the rear seating positions than in the front seating positions.

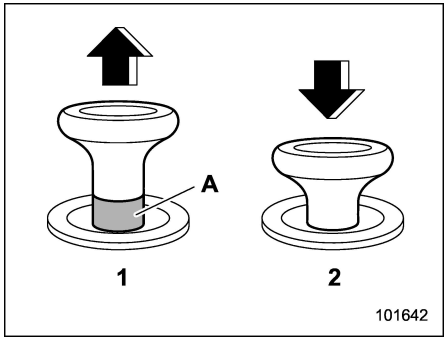

Lock release knob
1 Unlocked
2 Locked
A Unlocking marker in red

⚠ WARNING

- **Before installing a child restraint system, check that the unlocking marker on the seatback lock release knob cannot be seen to confirm that the rear seatback is securely locked in position. If the rear seatback is not locked securely, serious injury may result.**

– CONTINUED –

- **Do not leave children in the car unattended. High interior temperatures may cause heat stroke and dehydration that result in serious injury or death.**

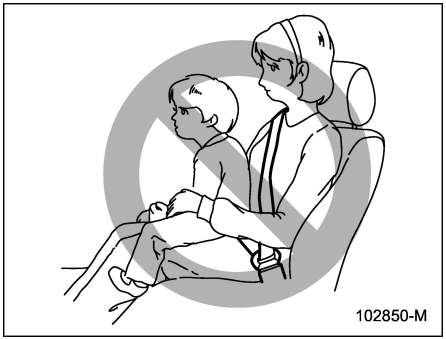

WARNING

Never let a passenger hold a child on their lap or in their arms while the vehicle is moving. The passenger cannot protect the child (or infant) from injury in a collision, because the child will be caught between the passenger and objects inside the vehicle. Additionally, if a passenger holds a child on their lap or in their arms in the front seat, they expose the child to another serious danger. Since the SRS airbag deploys with considerable speed and force, the child could be injured or even killed.

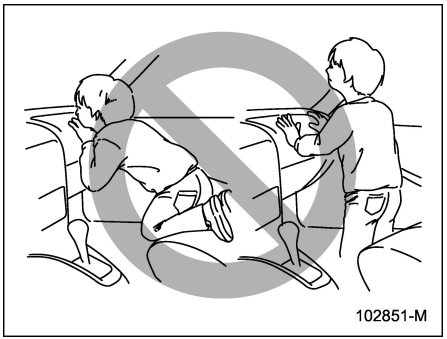

WARNING

Children should be properly restrained at all times when in the vehicle. Never allow a child to stand or kneel on any seat. An unrestrained child will be thrown forward during a sudden stop or in an accident and can be injured seriously. Additionally, a child who stands or kneels on or in front of the front seat is exposed to another serious danger. Since the SRS airbag deploys with considerable speed and force, the child could be injured or even killed.

Safety Tips for Installing Child Restraint Systems

WARNING

- **Child restraint systems and seatbelts can become hot in a vehicle that has been closed up in sunny weather; they could burn a small child. Check the child restraint system before you place a child in it.**
- **Attach the child restraint system to the anchors properly. When using the ISOFIX anchors, be sure that there are no foreign objects around the anchors.**

  Also, the seatbelts should not be caught behind the child restraint system. Make sure the child restraint system is securely attached. Otherwise, it may cause death or serious injury to children or other passengers in sudden braking, swerving, or accidents.
- **Do not leave an unsecured child restraint system in your vehicle.**

Unsecured child restraint systems can be thrown around inside of the vehicle in a sudden stop, turn or accident; they can strike and injure vehicle occupants as well as result in serious injuries or death to the child.

- Several types of child restraint systems may conceal the buckle of the neighboring seat. If the occupant of the neighboring seat cannot correctly fasten the seatbelt, that person must move to a different seat. If the seatbelt cannot be correctly fastened, there is the risk of serious injury or death in the event of sudden braking or a collision.
- If the child restraint system cannot be correctly installed because it contacts the driver's seat, move the child restraint system to a different seat. If it cannot be installed in a different seat (other than the driver's seat), adjust the front seat so that contact does not occur.

CAUTION

When you install a child restraint system, follow the manufacturer's instructions supplied with it. After installing the child restraint system, check to ensure that it is held securely in position. If it is not held tight and secure, the danger of your child suffering personal injury in the event of an accident may be increased.

▼ **Warning label**

WARNING

- **Warning labels are located on both sides of the front passenger's sun visor. The warning label indicates that it is forbidden to install a rearward facing child restraint system in the front passenger's seat.**
- **NEVER use a rearward facing child restraint on a seat protected by an ACTIVE AIRBAG in front of it, DEATH or SERIOUS INJURY to the CHILD can occur.**

Warning label

A AIRBAG

– CONTINUED –

■ Choosing a Child Restraint System

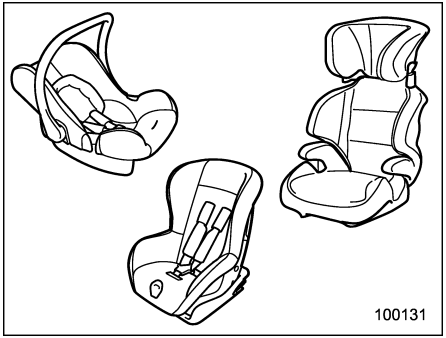

NOTE

Some sizes of child restraint systems may not fit the vehicle seat. Before purchasing a child restraint system, check whether it fits on the vehicle seat.

Choose a child restraint system that is appropriate for the child's size and age to provide the child with proper protection.

Also it is important that the child restraint system meets safety standards applicable to your country.

In most European countries, child restraint systems must meet the requirement of UN regulation No. 44 or No. 129. It can be identified by looking for the approval label on the child restraint system or the manufacturer's statement of compliance on the box and the system.

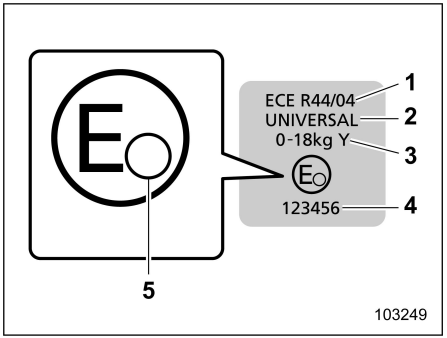

1 Regulation number
2 Category
3 Mass group
4 Approval number
5 Country code

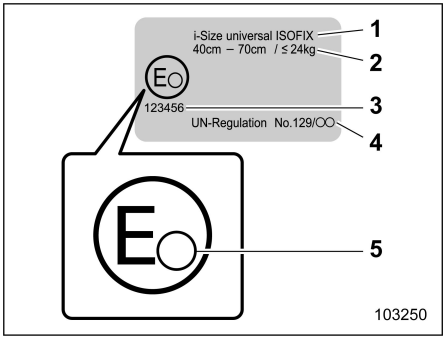

1 Category
2 Size and weight indication
3 Approval number
4 Regulation number
5 Country code

▼ Child Restraint System

Child restraint system suitability for each seating position

Seat position number	1	2	3	4
Seat position	Front passenger	2nd row left	2nd row center	2nd row right
Seating position suitable for universal belted	Forward only	Applicable	Applicable*1	Applicable
i-Size seating position (if applicable)	—	Applicable	—	Applicable
Seating position suitable for lateral fixture (L1/L2)	—	Not applicable	—	Not applicable
Suitable rearward facing fixture (R1/R2X/R2/R3)	—	R1/R2X/R2/R3	—	R1/R2X/R2/R3
Suitable forward facing fixture (F2X/F2/F3)	—	F2X/F2/F3	—	F2X/F2/F3
Suitable booster fixture (B2/B3)	—	B2/B3	—	B2/B3

*1: Child restraint system with a support leg cannot be used on the rear center seat position due to vehicle floor shape.
—: Seats that are not equipped with the lower anchorages for child restraint systems.

– CONTINUED –

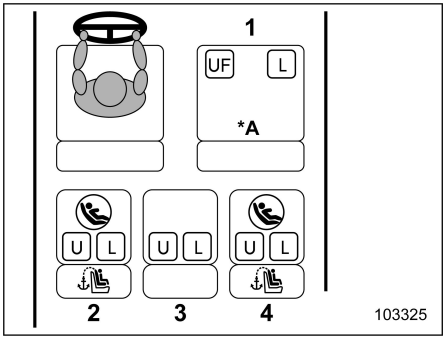

Left-hand drive models

*A: Front passenger seat adjustment
Seatback: upright
Seat cushion height: uppermost position (models with seat cushion height adjustment)
Forward and backward adjustment: rearmost position

1 Front passenger
2 2nd row left
3 2nd row center
4 2nd row right

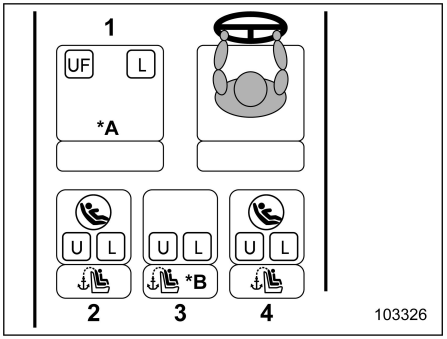

Right-hand drive models

*A: Front passenger seat adjustment
Seatback: upright
Seat cushion height: uppermost position (models with seat cushion height adjustment)
Forward and backward adjustment: rearmost position

*B: Top tether anchorages: for center seat (Australia models)

1 Front passenger
2 2nd row left
3 2nd row center
4 2nd row right

Mark	Description
U	Suitable for universal category child restraint system.
UF	Suitable for forward facing universal category child restraint systems that are installed using the seatbelt.
L	For a child restraint system permitted to be installed on FORESTER e-BOXER, refer to the applicable vehicle model list for the child restraint system or the child restraint system manufacturer's web site.
	Suitable for ISOFIX child restraint systems.
	Top tether anchorages are equipped.

■ When Installing the Forward Facing Child Restraint System on the Front Passenger's Seat

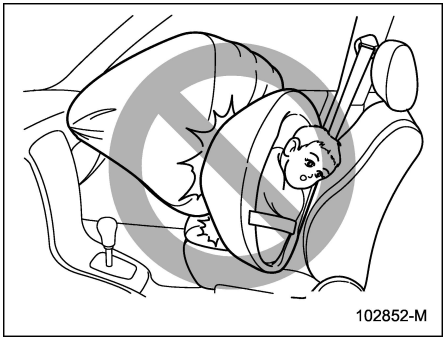

⚠ WARNING

- **NEVER INSTALL A REARWARD FACING CHILD RESTRAINT SYSTEM ON THE FRONT PASSENGER'S SEAT. DOING SO RISKS SERIOUS INJURY OR DEATH TO THE CHILD BY PLACING THE CHILD'S HEAD TOO CLOSE TO THE SRS AIRBAG.**
- **The front passenger's seat is not equipped with tether anchorages. Therefore, when installing a child restraint system that uses tether straps, do not install it on the front passenger's seat.**
- **When you install a child restraint system, follow the manufacturer's instructions supplied with it. After installing the child restraint system, check to ensure that it is held securely in position. If it is not held tight and secure, the danger in the event of an accident may be increased.**
- **Do not place the removed head restraint in the passenger compartment to prevent it from being thrown around in a sudden stop or a sharp turn.**
- **When the SRS airbag system warning indicator illuminates, install the child restraint system to the rear seat.**

⚠ CAUTION

For safety reasons, install a child restraint system to the rear seat. When it is unavoidable, only forward facing child restraint system should be installed in the front passenger's seat. For details, refer to "When installing the child restraint system to the front passenger's seat" ☞P85.

▼ When installing the child restraint system to the front passenger's seat

Only forward facing child restraint systems (including booster seats) can be installed on this seat and should only be installed when it is unavoidable. When you install a forward facing child restraint system to the front passenger's seat, perform the following procedure.

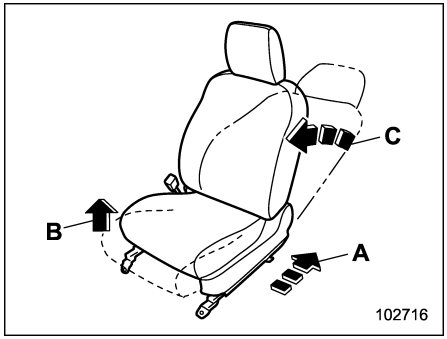

A Seat position: Rearmost
B Seat cushion height (if equipped): Uppermost
C Seatback: Upright

1. Adjust the front passenger's seat as illustrated.

– CONTINUED –

2. Install the child restraint system to the front passenger's seat. Refer to "Installing Child Restraint Systems with Seatbelt" ☞P86.
3. Place and secure the child (or infant) in the child restraint system.
4. Check that the child restraint system does not contact the head restraint. If the child restraint system does make contact with the head restraint, raise the head restraint to the extended position. If the child restraint system still makes contact, remove the head restraint. For details, refer to "Head Restraint Adjustment" ☞P57.

▼ Installation procedure

For the installation procedure, refer to "Installing Child Restraint Systems with Seatbelt" ☞P86.

■ Installing Child Restraint Systems with Seatbelt

⚠ CAUTION

- **When you install a child restraint system, follow the manufacturer's instructions supplied with it. After installing the child restraint system, check to ensure that it is held securely in position. If it is not held tight and secure, the danger of your child suffering personal injury in the event of an accident may be increased.**
- **When installing a child restraint system in the rear center seating position, set both seatbacks to the original position. Otherwise, the child restraint system cannot be securely restrained, which may result in death or serious injuries in the event of sudden stop, sudden steering maneuver or an accident.**

▼ Installing a rearward facing child restraint system

⚠ WARNING

- **NEVER INSTALL A REARWARD FACING CHILD RESTRAINT SYSTEM ON THE FRONT PASSENGER'S SEAT. DOING SO RISKS SERIOUS INJURY OR DEATH TO THE CHILD BY PLACING THE CHILD'S HEAD TOO CLOSE TO THE SRS AIRBAG.**
- **Before installing a child restraint system, be sure to confirm that the seatback is securely locked into place. Otherwise, in an accident, serious injury or death could result.**

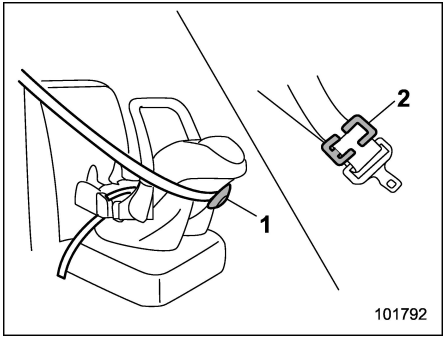

1 Lock-off device
2 Locking clip

NOTE

If using the lock-off device or the locking clip is recommended by the manufacturer's instructions supplied with the child restraint system, use the lock-off device or the locking clip to secure the child restraint system.

1. Place the child restraint system in the rear seating position.

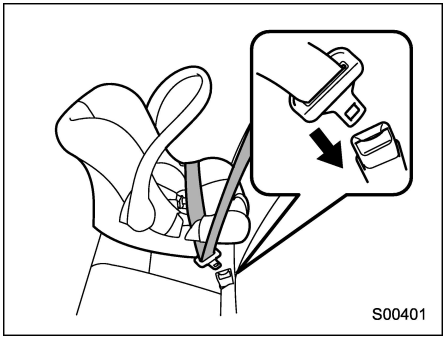

2. Run the lap and shoulder belt through or around the child restraint system following the instructions provided by its manufacturer.
3. Insert the tongue plate into the buckle until you hear a click.

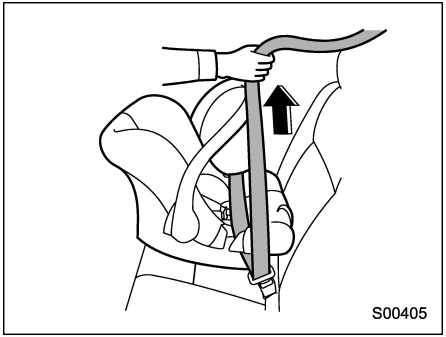

4. Take up the slack in the lap belt.

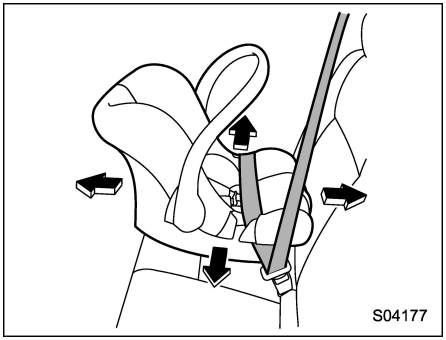

5. Before having a child sit in the child restraint system, try to move it back and forth and right and left to check if it is firmly secured. Sometimes a child restraint system can be more firmly secured by pushing it down into the seat cushion and then tightening the seatbelt.

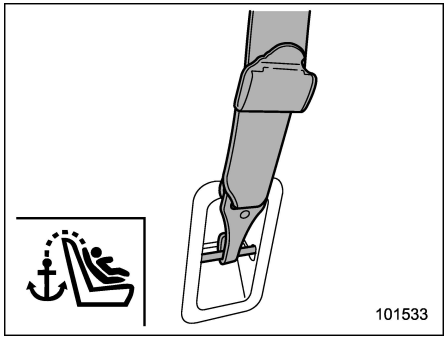

6. If the child restraint system requires a top tether, attach the hook onto the top tether anchorage and tighten the top tether strap. For additional instructions, refer to “Top Tether Anchorages” ☞P94.
7. To remove the child restraint system, press the release button on the seatbelt buckle.

▼ Installing a forward facing child restraint system

⚠ WARNING

When you intend to install a child restraint system in the rear center seating position, if the child restraint system does not fit snugly against

– CONTINUED –

the contours of the rear center seat cushion, install the child restraint system in the window-side seating position to be safe.

1. Place the child restraint system in the appropriate position.
2. If there is a gap between the child restraint system and the seatback, adjust the seatback angle until good contact is achieved.

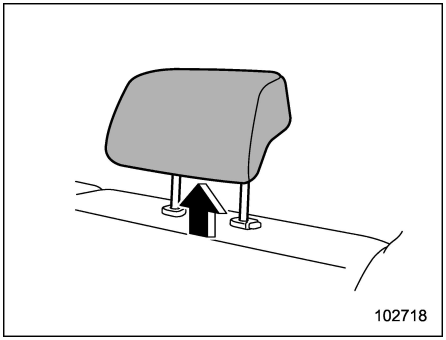

3. If the child restraint system makes contact with the head restraint, raise the head restraint to the extended position. If the child restraint system still makes contact, remove the head restraint. For details, refer to “Head Restraint Adjustment” ☞P62.

⚠ CAUTION

Store the removed head restraint in the cargo area. Do not place the head restraint in the passenger compartment to prevent it from being thrown around in the passenger compartment in a sudden stop or a sharp turn.

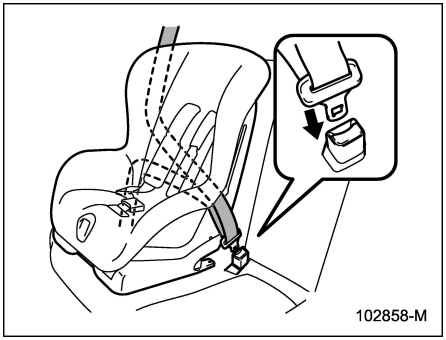

4. Run the lap and shoulder belt through the child restraint system following the instructions provided by its manufacturer.
5. Insert the tongue plate into the buckle until you hear a click.

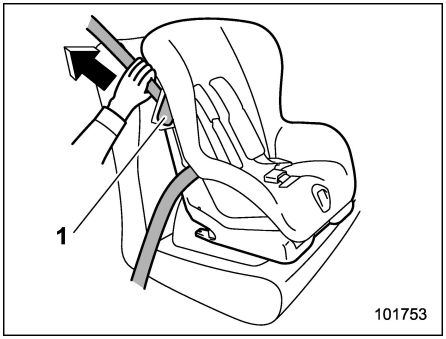

1 Lock-off lever

6. Release the child restraint system lock-off lever and pass the shoulder belt through the lock-off lever.
7. Take up the slack in the lap belt. At this time, to secure the child restraint system more firmly, apply your weight to push it down into the seat cushion as you tighten the seatbelt.

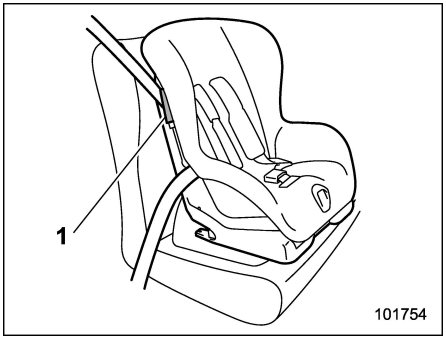

1 Lock-off lever

8. Lock the child restraint system lock-off lever to fix the shoulder belt.

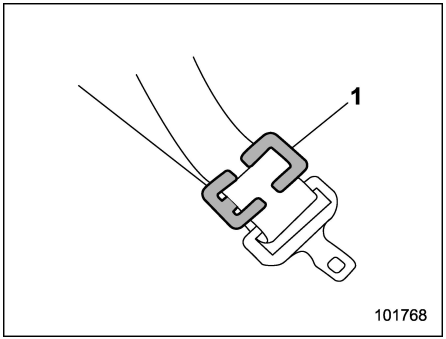

1 Locking clip

9. If your child restraint system is not equipped with a lock-off (a seatbelt locking feature), secure the child restraint system using a locking clip.

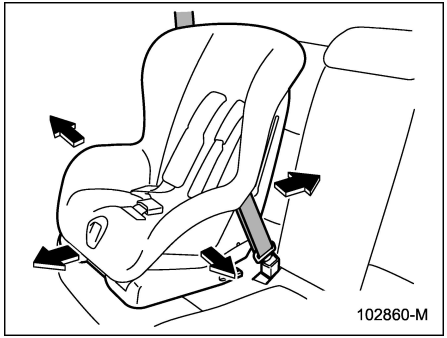

10. Before having a child sit in the child restraint system, try to move it back and forth and right and left to check if it is firmly secured. Sometimes a child restraint system can be more firmly secured by pushing it down into the seat cushion and then tightening the seatbelt.

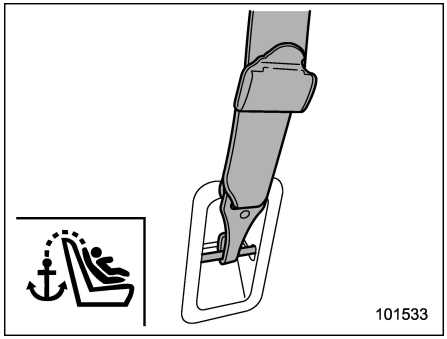

11. If the child restraint system requires a top tether, attach the hook onto the top tether anchorage and tighten the top tether strap. For additional instructions, refer to “Top Tether Anchorages” ☞P94.

– CONTINUED –

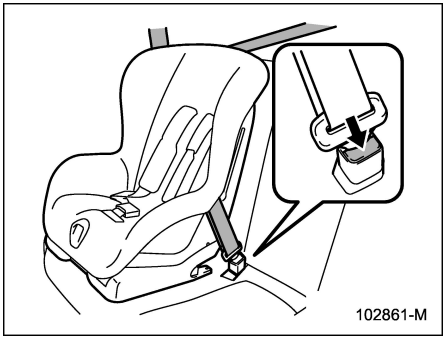

12. To remove the child restraint system, press the release button on the seat-belt buckle.

■ Installing a Booster Seat or Booster Cushion

⚠ CAUTION

When you install a booster seat/cushion, follow the manufacturer's instructions supplied with it. After installing the booster seat/cushion, check to ensure that it is held securely in position. If it is not held tight and secure, the danger of your child suffering personal injury in the event of an accident may be increased.

Booster seat

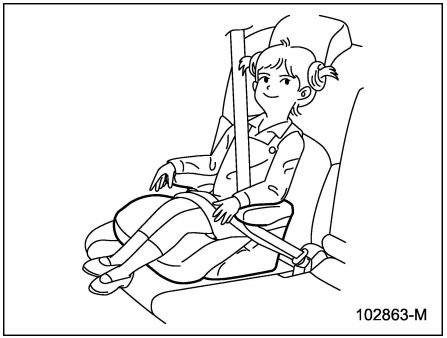

Booster cushion

1. Adjust the head restraint as follows.

For booster seat:

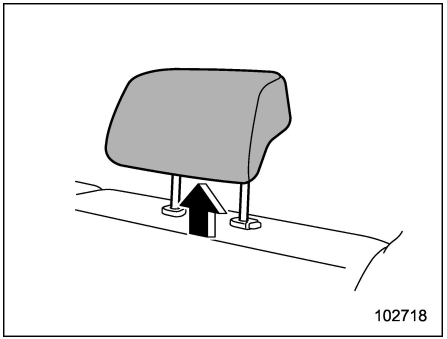

If the booster seat makes contact with the head restraint, raise the head restraint to the extended position. If the booster seat

still makes contact, remove the head restraint. For details, refer to “Head Restraint Adjustment” ☞P62.

⚠ CAUTION

Store the removed head restraint in the cargo area. Do not place the head restraint in the passenger compartment to prevent it from being thrown around in the passenger compartment in a sudden stop or a sharp turn.

For booster cushion:

Raise the head restraint to the extended position. Do not remove the head restraint.

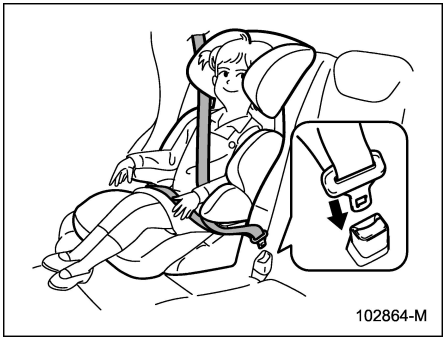

2. Place the booster seat/cushion and then sit the child on it. The child should sit well back on the booster seat/cushion.
3. If there is a gap between the booster seat/cushion and the seatback, adjust the seatback angle until good contact is achieved.
4. Run the lap and shoulder belt following the instructions provided by its manufacturer.
5. Insert the tongue plate into the buckle until you hear a click. Take care not to twist the seatbelt.
   Make sure the shoulder belt is positioned across the center of child’s shoulder and that the lap belt is positioned as low as possible on the child’s hips.

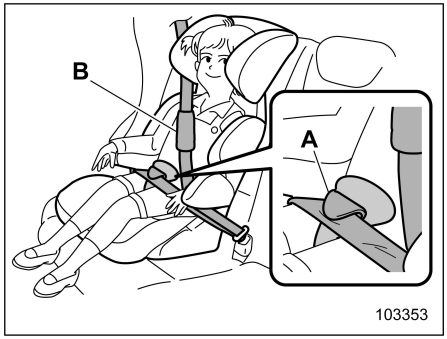

A SecureGuard
B XP-PAD

6. When using a child restraint system with a belt guide, perform the following two things.
   - Attach the SecureGuard to the lap belt.
   - Attach the XP-PAD to the shoulder belt.

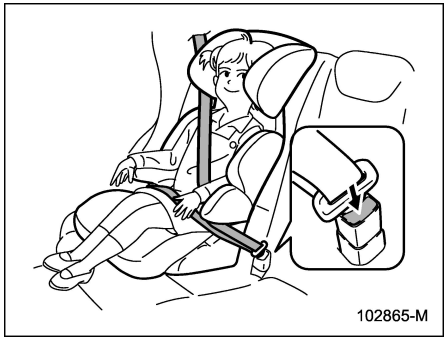

7. To unfasten the seatbelt, press the release button on the seatbelt buckle and allow the belt to retract.

⚠ WARNING

- **Never use a belt that is twisted or reversed. In an accident, this can increase the risk or severity of injury to the child.**
- **Never place the shoulder belt**

– CONTINUED –

under the child's arm or behind the child's back. If an accident occurs, this can increase the risk or severity of injury to the child.

- **The seatbelt should fit snugly in order to provide full restraint. Loose fitting belts are not as effective in preventing or reducing injury.**
- **Place the lap belt as low as possible on the child's hips. A high-positioned lap belt will increase the risk of sliding under the lap belt and of the lap belt sliding up over the abdomen, and both can result in serious internal injury or death.**
- **Make sure the shoulder belt is positioned across the center of child's shoulder. Placing the shoulder belt over the neck may result in neck injury during sudden braking or in a collision.**

■ Installation of Child Restraint Systems Using ISOFIX Anchor Bars

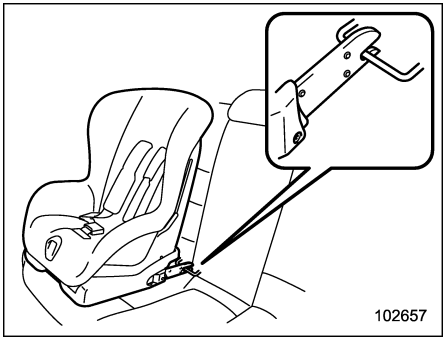

Your vehicle is equipped with ISOFIX anchor bars that allow an approved ISOFIX child restraint system to be installed on the rear seat without use of a seatbelt.

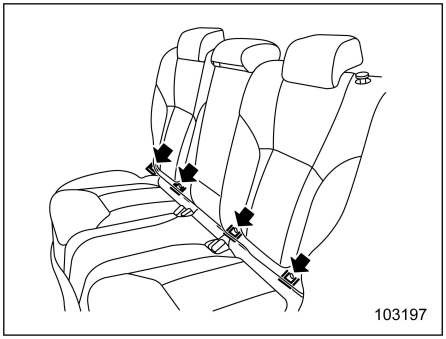

The ISOFIX anchor bars allow you to install a child restraint system only in the rear seat window-side seating positions. For each window-side seating position, two anchor bars are provided.

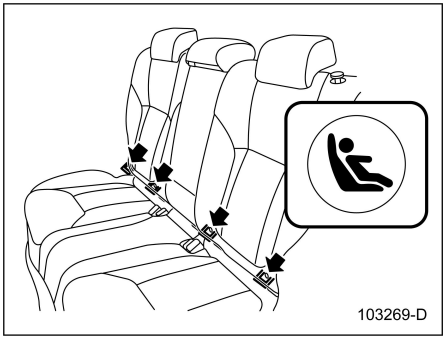

You will find the marks "" at the bottom of the rear seatback. These marks indicate the positions of the ISOFIX anchor bars.

1. Move the seatback back and forth to confirm that it is securely locked into place. For details, refer to "Folding Down the Rear Seatback" ☞P59.

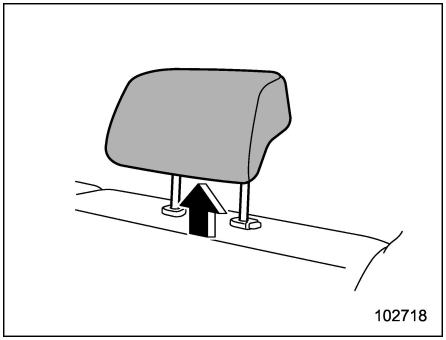

2. If the child restraint system makes contact with the head restraint of the rear seating position where the child restraint system is to be installed, raise the head restraint to the extended position. If the child restraint system still makes contact, remove the head restraint.

For details, refer to "Head Restraint Adjustment" ☞P62.

CAUTION

Store the removed head restraint in the cargo area. Do not place the head restraint in the passenger compartment to prevent it from being thrown around in the passenger compartment in a sudden stop or a sharp turn.

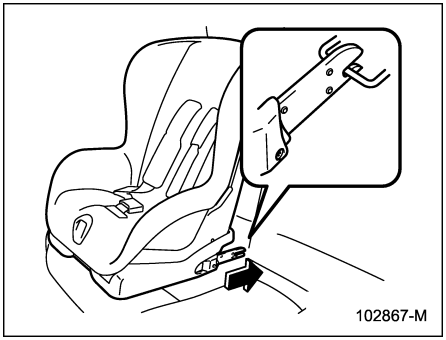

3. While following the instructions supplied by the child restraint system manufacturer, connect the connectors of the child restraint system to the anchor bars. When the connectors are fastened, make sure that the adjacent seatbelts are not caught.

4. If there is a gap between the child restraint system and the seatback, adjust the seatback angle until good contact is achieved.

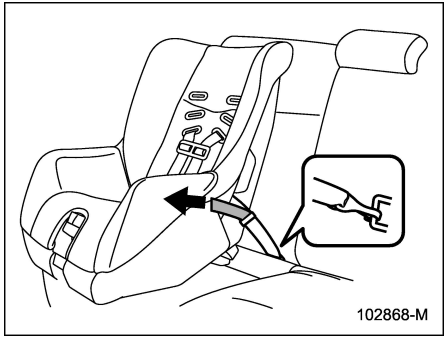

5. If your child restraint system is a flexible attachment type (which uses tether belts), push the child restraint system into the seat cushion and pull both left and right lower tether belts up to secure the child restraint system by taking up the slack in the belt.

– CONTINUED –

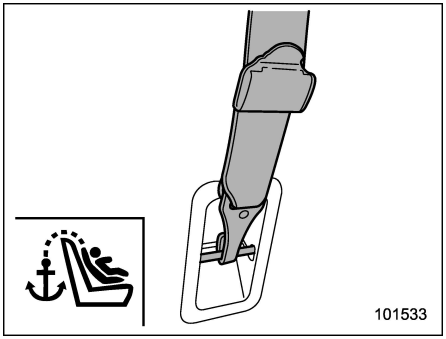

6. If the child restraint system requires a top tether, attach the hook onto the top tether anchorage and tighten the top tether strap. For additional instructions, refer to “Top Tether Anchorages” ☞P94.

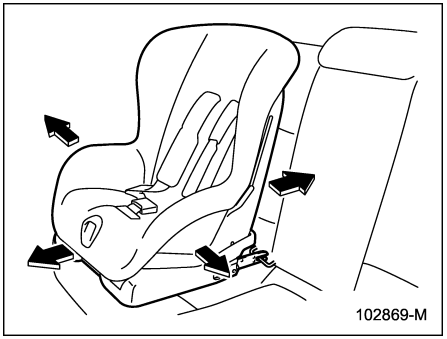

7. Before having a child sit in the child restraint system, try to move it back and forth and right and left to check if it is firmly secured. Sometimes a child restraint system can be more firmly secured by pushing it down into the seat cushion.

For further information, refer to the instruction manual supplied by the child restraint system manufacturer.

⚠ CAUTION

When you install a child restraint system, follow the manufacturer’s instructions supplied with it. After installing the child restraint system, check to ensure that it is held securely in position. If it is not held tight and secure, the danger of your child suffering personal injury in the event of an accident may be increased.

NOTE

Before installing a child restraint system, ask the manufacturer of the system to confirm that it is one approved for your vehicle.

■ Top Tether Anchorages

Your vehicle is provided with two or three top tether anchorages so that a child restraint system having a top tether can be installed in the rear seat. When installing a child restraint system using top tether, proceed as follows, while observing the instructions by the child restraint system manufacturer.

Since a top tether can provide additional stability by offering another connection between a child restraint system and the vehicle, we recommend that you use a top tether whenever one is required or available.

⚠ WARNING

Child restraint anchorages are designed to withstand only those

loads imposed by correctly fitted child restraints. Under no circumstances are they to be used for adult seatbelts, harnesses, or for attaching other items or equipment to the vehicle.

▼ Anchorage location

Anchorages are installed as shown in the following illustrations.

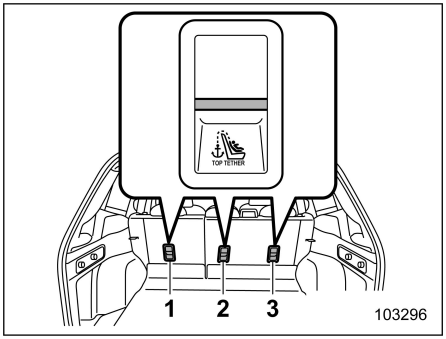

1 For the left seat
2 For the center seat (Australia models)
3 For the right seat

▼ To hook the top tether

⚠ CAUTION

- **When attaching the child restraint system using the top tether, remove the head restraint.**
- **Store the head restraint that has been removed in the cargo area. Do not place the head restraint in the passenger compartment to prevent it from being thrown around in the passenger compartment in a sudden stop or a sharp turn.**

1. Remove the head restraint of the rear seating position where the child restraint system is to be installed. For details, refer to “Head Restraint Adjustment” ☞P62.

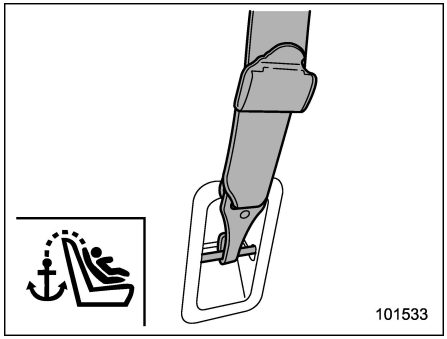

2. Attach the top tether hook to the appropriate top tether anchorage.
3. Tighten the top tether strap securely.

We recommend that you contact your SUBARU dealer if you have any questions regarding the installation of a child restraint system.

1-9. SRS Airbag (Supplemental Restraint System Airbag)

Supplemental Restraint System (SRS) name is used because the airbag system supplements the vehicle's seatbelts.

Your vehicle is equipped with a supplemental restraint system in addition to a lap/shoulder belt at each front seating position and each rear window-side seating positions.

These SRS airbags are designed only to be a supplement to the primary protection provided by the seatbelt.

The system also controls seatbelt pretensioners. For operation instructions and precautions concerning the seatbelt pretensioner, refer to "Seatbelt Pretensioners" ☞P75.

■ General Precautions Regarding SRS Airbag System

⚠ WARNING

To obtain maximum protection in the event of an accident, the driver and all passengers must always wear seatbelts when in the vehicle. The SRS airbags are designed only to be a supplement to the primary protection provided by the seatbelt. They do not eliminate the need to fasten seatbelts. Used in combination with the seatbelts, the SRS airbag offers vehicle occupants the best possible protection in the event of a serious accident.

Not wearing a seatbelt increases the chance of severe injury or death in a crash even when the vehicle has the SRS airbag.

For instructions and precautions concerning the seatbelt system, refer to "Seatbelts" ☞P67.

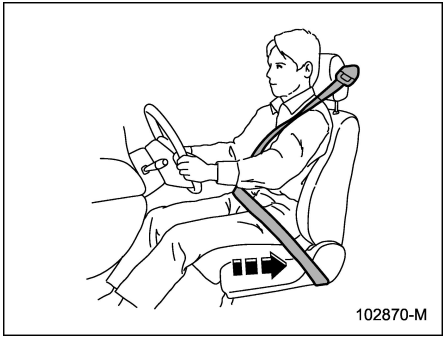

⚠ WARNING

The SRS airbags deploy with considerable speed and force. Occupants who are not seated in the proper upright position when the SRS airbag deploys could suffer very serious injuries. Because the SRS airbag needs enough space for deployment, the driver should always sit upright and well back in the seat as far from the steering wheel as practical while still maintaining full vehicle control, and the front passenger should move the seat as far back as possible and sit upright and well back in the seat.

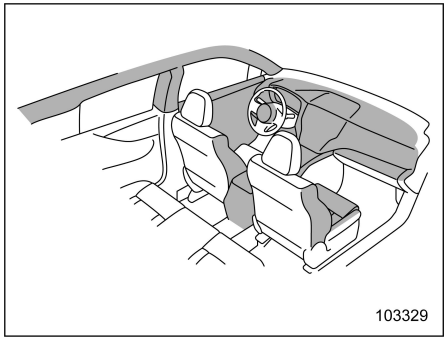

WARNING

- If you notice any damage or cracks where an SRS airbag is stored, have it replaced by an authorized SUBARU dealer, SUBARU authorized repairer, or any reliable repairer.
- Do not strike the area around SRS airbag system component parts or subject the area to impact.

WARNING

- Do not sit or lean close to either front door. The SRS side airbags are stored in both front seat seatbacks next to the door, and they provide protection by deploying rapidly in the event of a side impact collision. However, the force of SRS side airbag deployment can injure an occupant if they are too close to an SRS airbag.
- Since this vehicle is equipped with SRS curtain airbags, do not sit or lean close to the front or rear door on either side. Do not put body parts out of the window. The SRS curtain airbags on both sides of the cabin are stored in the roof side (between the front pillar and a point over the rear seat), and they provide protection by deploying rapidly in the event of a side impact or an offset frontal collision. However, the force of its deployment may cause injuries if your head is too close to it.
- Make sure the driver and front seat passenger remain seated upright at all times. The SRS far-side airbag (if equipped) is stored in the center of the seatback of the driver's seat. It provides protection by quickly deploying in the event of a side impact collision. Leaning into the deployment path of the SRS airbag can prevent the SRS airbag from deploying properly, increasing your risk of serious injury.
- Do not sit or lean close to the SRS airbag. Because the SRS airbag deploys with considerable speed and force to protect in high speed collisions, the force of an airbag can injure an occupant whose body is too close to SRS airbag.

  It is also important to wear a seatbelt to help avoid injuries that can result when the SRS airbag contacts an occupant who is not seated in the proper position.

  Even when properly positioned, there remains a possibility that an occupant may suffer minor injuries, such as abrasions and bruises to the face or arms, because of the SRS airbag deployment force.

– CONTINUED –

WARNING

- **Keep arms away from either door or its internal trim. Vehicle occupants could be injured in the event of SRS side airbag deployment.**
- **Do not open the lid of the center console box while driving. Doing so can interface with the proper operation of the SRS far-side airbag (if equipped) or cause injury to someone if the SRS far-side airbag (if equipped) inflates while the lid is open.**
- **Do not place any objects over or near the SRS airbag cover or between you and the SRS airbag. If the SRS airbag deploys, these objects could interfere with its proper operation and could be propelled inside the vehicle, causing injury.**

CAUTION

- **When the SRS airbag deploys, some smoke will be released. This smoke could cause breathing problems for people with a history of asthma or other breathing trouble. If you or your passengers have breathing problems after SRS airbag deploys, get fresh air promptly.**
- **A deploying SRS airbag releases hot gas. Occupants could get burned if they come into direct contact with the hot gas.**

NOTE

- **When you sell your vehicle, we urge you to inform the buyer that the vehicle is equipped with SRS airbags. Also, notify the buyer of the applicable section in this Owner's Manual.**
- **If the SRS airbag deploys, fuel supply will be cut off to reduce the risk of fire caused by leaking fuel. For details about restarting of the e-BOXER system, refer to "If Your Vehicle Is Involved in an Accident" ☞P453.**

General Precautions Regarding SRS Airbag System for Accessories and Any Objects

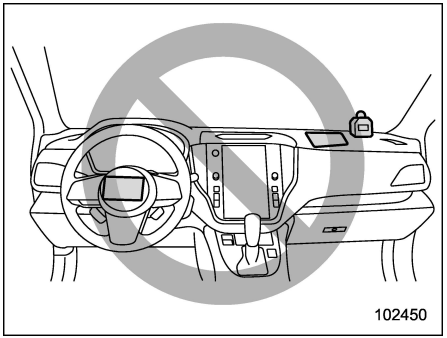

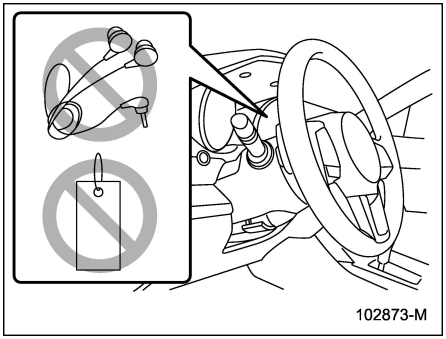

WARNING

- **Do not put any objects (including straps or cords) over the steering wheel pad, column cover, or dashboard.**
  - **These objects could be entangled with the steering wheel, preventing the SRS frontal airbag, etc. from operating properly.**
  - **If the SRS frontal airbag deploys, these objects could be propelled inside the vehicle, causing injury.**
- **Do not put any objects under the driver's side of the instrument panel. If the SRS knee airbag deploys, the objects could interfere with its proper operation and could be propelled inside the vehicle and cause injury.**

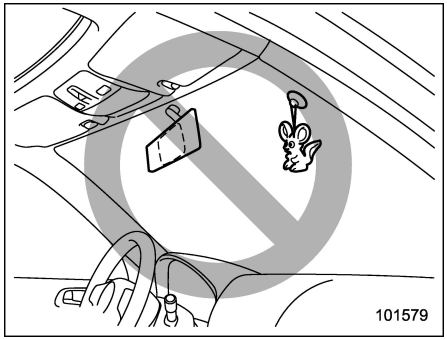

WARNING

Do not attach accessories to the windshield, or fit an extra-wide mirror over the inside rear view mirror. If the SRS airbag deploys, those objects could become projectiles that could seriously injure vehicle occupants.

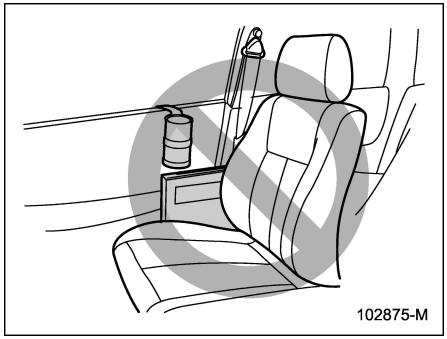

WARNING

- **Do not attach accessories to the door trim, near the SRS side airbags or the SRS far-side airbag (if equipped). In addition, do not place objects near the SRS side airbags or the SRS far-side airbag (if equipped). In the event the SRS side airbag or SRS far-side airbag (if equipped) deploys, these accessories or objects could become projectiles and cause injuries to the vehicle's occupants.**
- **Do not attach a hands-free microphone or any other accessory to a front pillar, a center pillar, a rear**

– CONTINUED –

pillar, the windshield, a side window, an assist grip, or any other cabin surface that would be near a deploying SRS curtain airbag. A hands-free microphone or other accessory in such a location could be propelled through the cabin with great force by the curtain airbag, or it could prevent correct deployment of the curtain airbag. In either case, the result could be serious injuries.

- Never hang or place coat hangers or other hard or pointed objects near the side windows. If such items are present when the SRS curtain airbags deploy, they could be thrown through the passenger compartment and cause serious injuries. They could also prevent proper operation of the SRS curtain airbags.

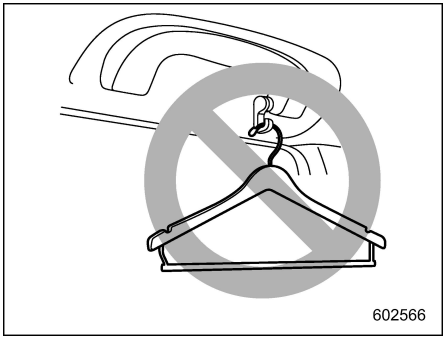

WARNING

Do not hang coat hangers or other hard or pointed objects on the coat hooks. If such items were hanging on the coat hooks during deployment of the SRS curtain airbags, they could cause serious injuries by coming off the coat hooks and being thrown through the cabin or by preventing deployment of the curtain airbags.

Before hanging clothing on the coat hooks, make sure there are no sharp objects in the pockets. Hang clothing directly on the coat hooks without using hangers.

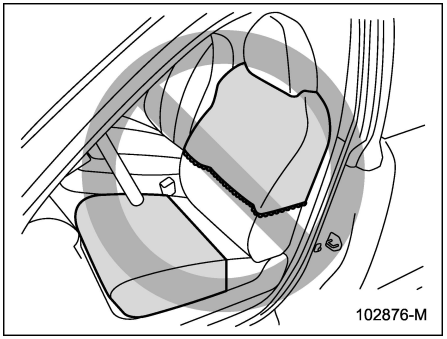

WARNING

- Do not put any kind of clothes or other objects over the front seat back, and do not attach labels or stickers to the front seat surface on or near the SRS side airbag, the SRS seat cushion airbag or the SRS far-side airbag (if equipped). Doing so could prevent proper deployment of the SRS side airbag, the SRS seat cushion airbag or the SRS far-side airbag (if equipped), reducing the protection of the front seat occupant.
- Do not install a seat cover unless it is a genuine SUBARU seat

cover exclusively designed for use with the SRS airbag. Even when using a genuine SUBARU seat cover, the SRS side airbag, the SRS seat cushion airbag or the SRS far-side airbag (if equipped) may not function normally if the seat cover is not installed correctly.

■ General Precautions Regarding SRS Airbag System and Children

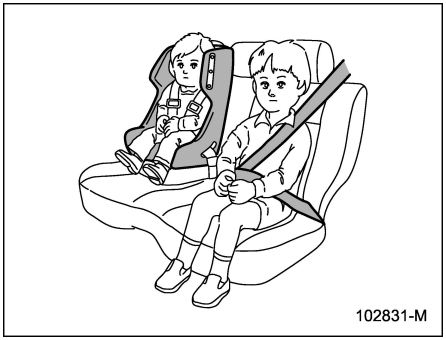

⚠ WARNING

SUBARU strongly recommends that ALL infants and children (including those in child restraint systems) sit in the REAR seat properly restrained in a child restraint system or in a seatbelt, whichever is appropriate for the child's age, height and weight. The SRS airbag deploys with considerable speed and force and can injure or even kill children, especially if they are not restrained or improperly restrained. Because children are lighter and weaker than adults, their risk of being injured from deployment is greater. According to accident statistics, children are safer when properly restrained in the rear seating positions than in the front seating positions. For instructions and precautions concerning child restraint systems, refer to "Child Restraint Systems" ☞P79.

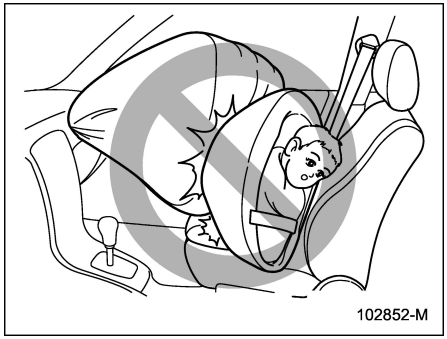

⚠ WARNING

NEVER use a rearward facing child restraint on a seat protected by an ACTIVE AIRBAG in front of it, DEATH or SERIOUS INJURY to the CHILD can occur.

– CONTINUED –

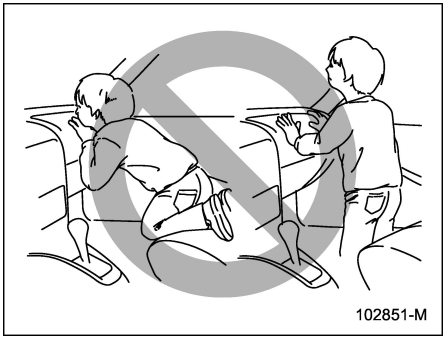

WARNING

Never allow a child to stand up or kneel on the front passenger's seat. The SRS airbag deploys with considerable force and can injure or even kill the child.

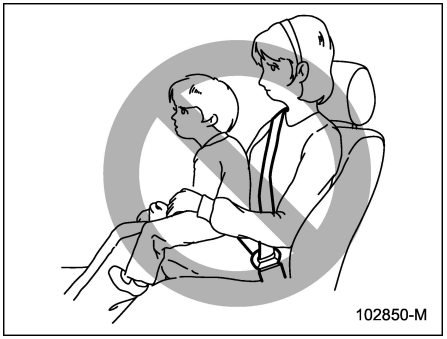

WARNING

Never hold a child on your lap or in your arms. The SRS airbag deploys with considerable force and can injure or even kill the child.

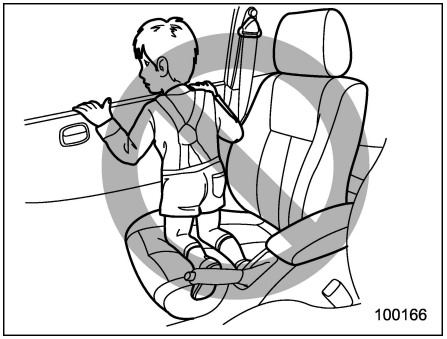

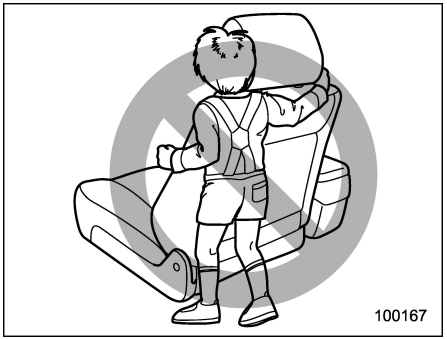

WARNING

- **Never allow a child to do the following.**
  - **Kneel on any passenger's seat facing the side window.**
  - **Wrap his/her arms around the front seat seatback.**
  - **Put his/her head, arms or other parts of the body out of the window.**

  In the event of an accident, the deployment force of the SRS side airbag, SRS curtain airbag or SRS far-side airbag (if equipped) could injure the child seriously, if their head, arms or other body parts are too close to the SRS side airbag, SRS curtain airbag or SRS far-side airbag (if equipped).
- **Since your vehicle is also equipped with a front passenger's SRS frontal airbag, infants and children should be placed on the rear seat anyway and should be properly restrained at all times.**

– CONTINUED –

■ Components

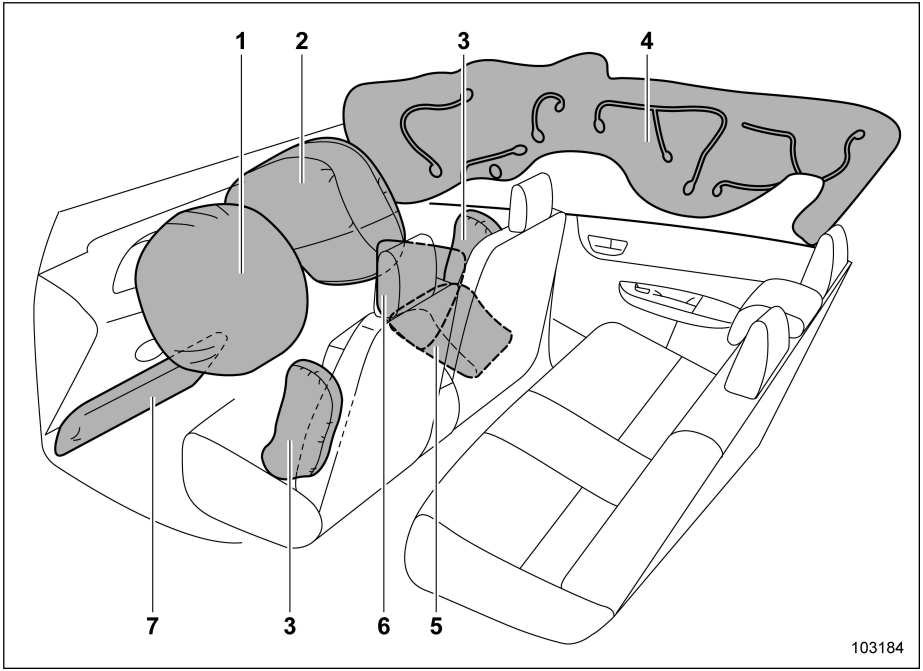

The SRS airbags are stowed in the following locations.

1 **Driver's SRS frontal airbag:** in the center portion of the steering wheel
2 **Front passenger's SRS frontal airbag:** near the top of the dashboard
3 **SRS side airbag:** in the door side of each front seat seatback
4 **SRS curtain airbag:** in the roof side (between the front pillar and a point over the rear seat)
5 **SRS seat cushion airbag:** in the front passenger's seat cushion
6 **SRS far-side airbag (if equipped):** on the seatback of the driver's seat (located toward the center of the vehicle)
7 **SRS knee airbag:** under the steering column

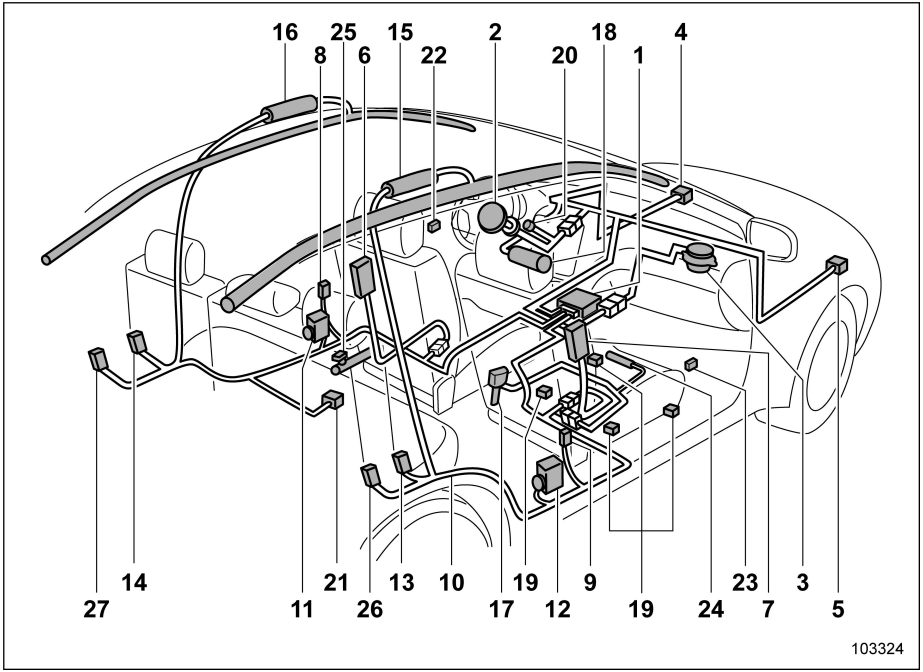

Left-hand drive models

1 Airbag control module (including impact sensors)
2 Frontal airbag module (driver's side)
3 Frontal airbag module (front passenger's side)
4 Front impact sensor (left-hand side)
5 Front impact sensor (right-hand side)
6 Side airbag module (driver's side)
7 Side airbag module (front passenger's side)
8 Side impact sensor (center pillar left-hand side)
9 Side impact sensor (center pillar right-hand side)
10 Airbag wiring
11 Seatbelt pretensioner (all models) and adaptive force limiter (if equipped) (driver's side)
12 Seatbelt pretensioner (all models) and adaptive force limiter (if equipped) (front passenger's side)
13 Side impact sensor (rear wheel house right-hand side)
14 Side impact sensor (rear wheel house left-hand side)
15 Curtain airbag module (right-hand side)
16 Curtain airbag module (left-hand side)
17 Seatbelt buckle switch (front passenger's side)
18 Knee airbag module (driver's side)
19 Front passenger's occupant detection sensor
20 SRS airbag system warning light
21 Side impact sensor (under the rear center seat)

– CONTINUED –

22 Side impact sensor (front door left-hand side)
23 Side impact sensor (front door right-hand side)
24 Seat cushion airbag module (front passenger's side)
25 Lap belt pretensioner (driver's side)
26 Rear seatbelt pretensioner (right-hand side)
27 Rear seatbelt pretensioner (left-hand side)

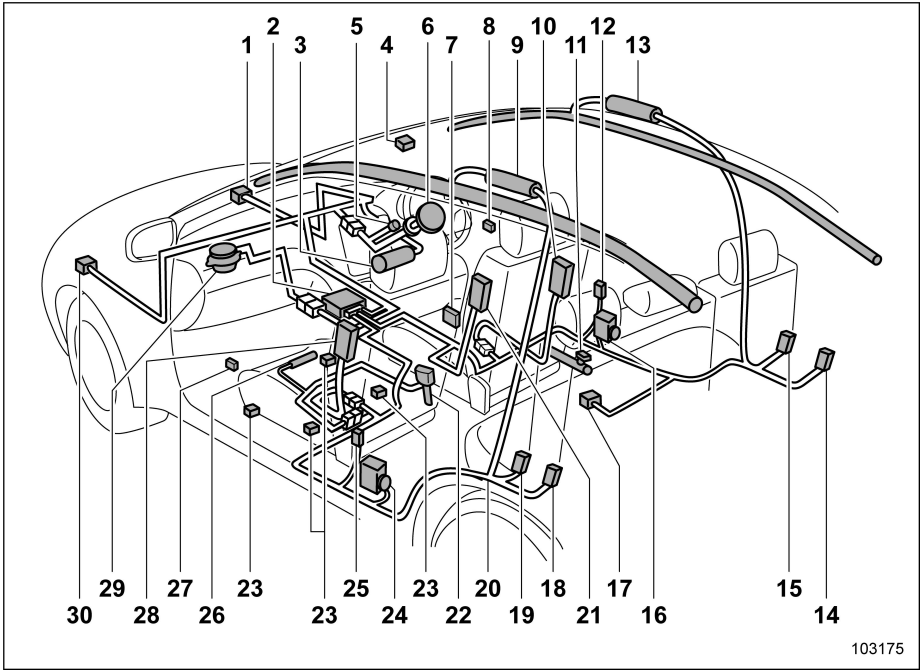

Right-hand drive models

1 Front impact sensor (right-hand side)
2 Airbag control module (including impact sensors)
3 Knee airbag module (driver's side)
4 Front passenger's frontal airbag ON and OFF indicator lights (if equipped)
5 SRS airbag system warning light
6 Frontal airbag module (driver's side)
7 Driver's seat position sensor (if equipped)
8 Side impact sensor (front door right-hand side)
9 Curtain airbag module (left-hand side)
10 Side airbag module (driver's side)
11 Lap belt pretensioner (driver's side)
12 Side impact sensor (center pillar right-hand side)
13 Curtain airbag module (right-hand side)
14 Rear seatbelt pretensioner (right-hand side)
15 Side impact sensor (rear wheel house right-hand side)
16 Seatbelt pretensioner (all models) and adaptive force limiter (if equipped) (driver's side)
17 Side impact sensor (under the rear center seat)
18 Rear seatbelt pretensioner (left-hand side)
19 Side impact sensor (rear wheel house left-hand side)
20 Airbag wiring
21 Far-side airbag module (driver's side) (if equipped)

– CONTINUED –

22 Seatbelt buckle switch (front passenger's side)
23 Front passenger's occupant detection sensor
24 Seatbelt pretensioner (all models) and adaptive force limiter (if equipped) (front passenger's side)
25 Side impact sensor (center pillar left-hand side)
26 Seat cushion airbag module (front passenger's side)
27 Side impact sensor (front door left-hand side)
28 Side airbag module (front passenger's side)
29 Frontal airbag module (front passenger's side)
30 Front impact sensor (left-hand side)

■ SRS Airbag

⚠ WARNING

Warning labels are located on both sides of the front passenger's sun visor. Carefully read the description in "Warning label" ☞P81.

For the locations of the SRS airbags, refer to "Components" ☞P104.

In a moderate to severe frontal collision, the following components deploy.

- SRS frontal airbag for driver
- SRS frontal airbag for front passenger
- SRS seat cushion airbag for front passenger
- SRS curtain airbag*
- SRS knee airbag for driver

*: When an offset frontal collision that is severe enough to deploy the front airbag occurs.

These components supplement the seatbelts by reducing the impact to the occupant's head, chest and knees.

In a moderate to severe side impact collision, the SRS side airbag on the impacted side of the vehicle deploys between the occupant and the door panel and supplements the seatbelt by reducing the impact to the occupant's chest and waist. The SRS side airbag operates only for front seat occupants.

In a moderate to severe side impact collision, the SRS far-side airbag (if equipped) on the impacted side of the vehicle deploys between the driver and the front passenger, and it supplements the seatbelt by reducing the impact to the occupant's head. The SRS far-side airbag (if equipped) operates only for the protection of front seat occupants.

In a moderate to severe side impact collision, the SRS curtain airbag on the impacted side of the vehicle deploys between the occupant and the side window and supplements the seatbelt by reducing the impact to the occupant's head.

▼ Occupant detection system

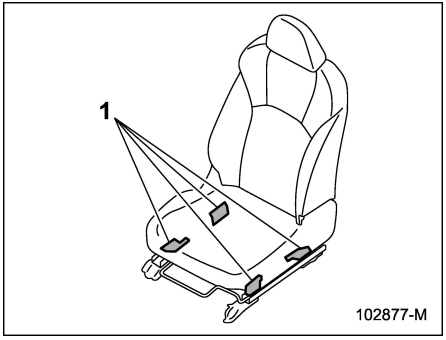

1 Occupant detection sensors

The occupant detection sensors are installed between the seat and seat rails, and monitor the physique and posture of the front passenger. Using this information, the occupant detection system determines whether the front passenger's SRS frontal airbag and front passenger's SRS seat cushion airbag should be deployed or not. The occupant detection system may not inflate the front passenger's SRS frontal airbag even when the driver's

SRS frontal airbag deploys. This is normal.

WARNING

Do not kick the front passenger seat or subject it to severe impact. Otherwise, the SRS airbag system warning light may illuminate to indicate a malfunction of the front passenger occupant detection system. In this case, we recommend that you contact your SUBARU dealer immediately.

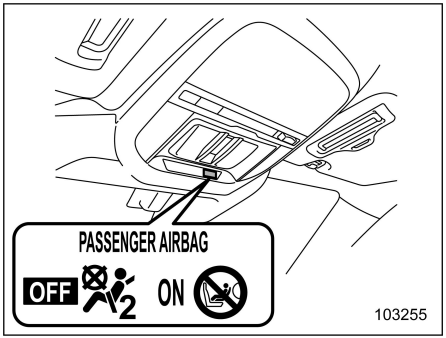

OFF: Front passenger's frontal airbag OFF indicator light

ON: Front passenger's frontal airbag ON indicator light

If the front passenger's frontal airbag ON and OFF indicator lights do not work properly, do not allow anyone to sit on the front passenger's seat and have the occupant detection system checked by your SUBARU dealer.

Also, if luggage are placed on the front passenger's seat, this may adversely affect the ability of the system to determine deployment. This may prevent the front passenger's frontal airbag ON and OFF indicator lights from working properly. Check that the indicators work properly.

When the OFF indicator light turns off and the ON indicator light illuminates, the front passenger's frontal airbag may deploy during a collision. Remove luggage from the front passenger's seat.

▼ **Front passenger's SRS frontal airbag**

CAUTION

Observe the following precautions. Failure to do so may prevent the front passenger's SRS frontal airbag from functioning correctly or cause the system to fail.

- **Do not apply any strong impact to the front passenger's seat such as by kicking.**
- **Do not let rear passengers rest their feet between the front seatback and seat cushion.**
- **Do not insert objects between the front seatback and seat cushion.**
- **Do not remove or disassemble the front passenger's seat.**
- **Do not install any accessory (such as an audio amplifier) other than a genuine SUBARU accessory or an equivalent under the front passenger's seat.**
- **Do not place anything (shoes, umbrella, etc.) under the front passenger's seat.**
- **Do not place any objects (books, etc.) around the front passenger's seat.**
- **Do not use the front passenger's seat with the head restraint removed.**
- **Do not leave any articles on the front passenger's seat or the seatbelt tongue and buckle engaged when you leave your vehicle.**
- **Do not put sharp object(s) on the seat or pierce the seat upholstery.**

– CONTINUED –

- **Do not place a magnet near the seatbelt buckle and the seatbelt retractor.**
- **For models with a manual seat, do not use front seats with their forward-backward position and seatback not being locked into place securely. If any of them are not locked securely, adjust them again. For adjusting procedure, refer to "Manual Seat" ☞P50 (models equipped with manual seats only).**

If the seatbelt buckle switch and/or front passenger's occupant detection system have failed, the SRS airbag system warning light will illuminate. We recommend that you have the system inspected by your SUBARU dealer immediately if the SRS airbag system warning light illuminates.

If your vehicle has sustained impact, this may affect the proper function of the front passenger's SRS frontal airbag system. We recommend that you have your vehicle inspected at your SUBARU dealer. Do not use the front passenger's seat while driving the vehicle to your SUBARU dealer or another service center.

▼ Passenger's frontal airbag ON and OFF indicator lights (if equipped)

Refer to "Front Passenger's Frontal Airbag ON and OFF Indicator Lights" ☞P183.

▼ Conditions in which front passenger's SRS frontal airbag is not activated

The front passenger's SRS frontal airbag will not be activated when any of the following conditions are met regarding the front passenger's seat:

- The seat is empty.
- The seat is equipped with an appropriate child restraint system and an infant is restrained in it. (See WARNING that follows.)
- The front passenger's occupant detection system is malfunctioning.

⚠ WARNING

SUBARU strongly recommends that ALL infants and children (including those in child restraint systems) sit in the REAR seat properly restrained in a child restraint system or in a seatbelt, whichever is appropriate for the child's age, height and weight. The SRS airbag deploys with considerable speed and force and can injure or even kill children, especially if they are not restrained or improperly restrained. Because children are lighter and weaker than adults, their risk of being injured from deployment is greater. According to accident statistics, children are safer when properly restrained in the rear seating positions than in the front seating positions. For instructions and precautions concerning child restraint systems, refer to "Child Restraint Systems" ☞P79.

⚠ CAUTION

When the front passenger's seat is occupied by an infant in an appropriate child restraint system, observe the following precautions. Failure to do so may interfere with the proper operation of the occupant detection system, activating the front passenger's SRS frontal airbag even though that seat is occupied by the infant in the child restraint system.

- **Do not place any article on the seat other than the infant in the child restraint system.**

- **Do not place more than one infant in the child restraint system.**
- **Do not install any accessory such as a table or TV onto the seatback.**
- **Do not store a heavy load in the seatback pocket.**
- **Do not allow the rear seat occupant to place his/her hands or legs on the front passenger's seatback, or allow him/her to pull the seatback.**

▽ **If the front passenger's frontal airbag ON indicator light illuminates and the OFF indicator light turns off even when an infant or a small child is in a child restraint system (including booster seat)**

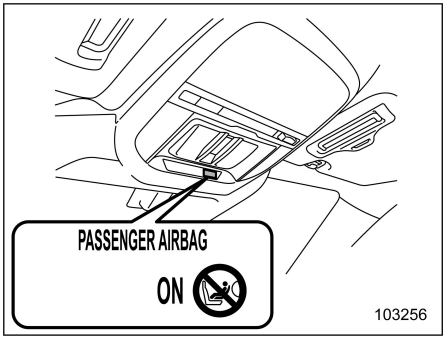

ON : Front passenger's frontal airbag ON indicator light

1. Turn the ignition switch to the "OFF" position.
2. Remove the child restraint system from the seat.
3. By referring to the child restraint manufacturer's recommendations as well as the child restraint system installation procedures in "Child Restraint Systems" ☞P79, correctly install the child restraint system.
4. Turn the ignition switch to the "ON" position and make sure that the front passenger's frontal airbag ON indicator light turns off and the OFF indicator light illuminates.

If still the ON indicator light remains illuminated while the OFF indicator light turns off, take the following actions.

- Ensure that no article is placed on the seat other than the child restraint system and the child occupant.
- Ensure that the backward-forward position and seatback of the front passenger's seat are locked into place securely by moving the seat back and forth (models with manual seat only).
- Ensure that there is no article left in the seatback pocket.

If the ON indicator light still remains illuminated while the OFF indicator light turns off after taking the relevant corrective actions described above, relocate the child restraint system to the rear seat and we recommend that you immediately contact your SUBARU dealer for an inspection.

NOTE

When a child who has outgrown a child restraint system or a small adult is seated in the front passenger's seat, the SRS frontal airbag system may or

– CONTINUED –

may not activate the front passenger's SRS frontal airbag depending on the occupant's seating posture. Children should always wear a seatbelt when sitting in the seat irrespective of whether the airbag is deactivated or activated. If the front passenger's SRS frontal airbag is activated (the ON indicator light remains illuminated while the OFF indicator light turns off), take the following action.

- **Ensure that no article is placed on the seat other than the occupant.**

If the ON indicator light still remains illuminated while the OFF indicator light turns off despite the fact that the actions noted above have been taken, seat the child in the rear seat and we recommend that you immediately contact your SUBARU dealer for an inspection. Even if the system has passed the dealer inspection, it is recommended that on subsequent trips the child always take the rear seat.

Children who have outgrown a child restraint system should always wear the seatbelt irrespective of whether the airbag is deactivated or activated.

▼ Conditions in which front passenger's SRS frontal airbag is activated

The front passenger's SRS frontal airbag will be activated for deployment upon impact when any of the following conditions are met regarding the front passenger's seat.

- When the seat is occupied by an adult.
- When certain items (e.g. jug of water) are placed on the seat.

⚠ CAUTION

- **When the front passenger's seat is occupied by an adult, do not place anything (shoes, umbrella, etc.) under the front passenger's seat.**
- **Doing so may deactivate the front passenger's SRS frontal airbag despite the fact that the seat is occupied by an adult. This may result in personal injury.**
- **Do not allow the rear seat occupant to lift the front passenger's seat cushion using his/her feet.**
- **Do not place any article under the front passenger's seat, or squeeze any article from behind and under the seat.**
- **Do not squeeze any article between the front passenger's seat and side trim/pillar, door or center console box. This may lift the seat cushion.**

▽ If the passenger's frontal airbag OFF indicator light illuminates and the ON indicator light turns off even when the front passenger's seat is occupied by an adult

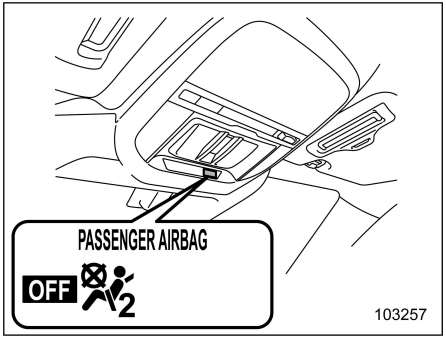

OFF 2: Front passenger's frontal airbag OFF indicator light

This can be caused by the adult incorrectly sitting in the front passenger's seat.

1. Turn the ignition switch to the "OFF" position.

2. Ask the front passenger to set the seatback to the upright position, sit up straight in the center of the seat cushion, correctly fasten the seatbelt, position his/her legs out forward, and adjust the seat to the rearmost position.
3. Turn the ignition switch to the “ON” position.

If the OFF indicator light remains illuminated while the ON indicator light remains off, take the following actions.

1. Turn the ignition switch to the “OFF” position.
2. Make sure that the front passenger does not use a blanket, seat cushion, seat cover, seat heater or massager, etc.
3. If wearing excessive layers of clothing, the front passenger should remove any unnecessary items before sitting in the front passenger’s seat, or should sit in a rear seat.
4. Turn the ignition switch to the “ON” position and wait 6 seconds to allow the system to complete self-checking. Following the system check, both indicators turn off for 2 seconds. Now, the ON indicator light should illuminate while the OFF indicator light remains off.

If the OFF indicator light still remains illuminated while the ON indicator light remains off, ask the occupant to move to the rear seat and we recommend that you immediately contact your SUBARU dealer for an inspection.

■ System Operation

⚠ CAUTION

Do not touch the SRS airbag system components with bare hands right after deployment. Doing so can cause burns because the components can be very hot as a result of deployment.

The SRS airbags can function only when the ignition switch is in the “ON” position.

When SRS airbags deploy, a sudden, fairly loud inflation noise will be heard and some smoke will be released. These occurrences are a normal result of the deployment. This smoke does not indicate a fire in the vehicle.

– CONTINUED –

▼ SRS frontal airbag operation

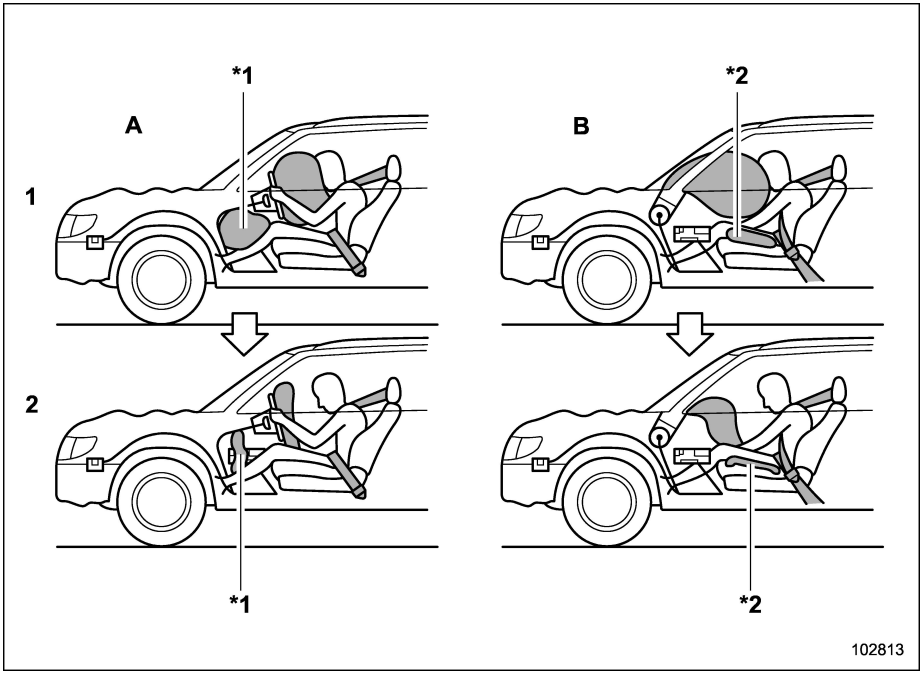

A Driver's side
B Passenger's side
1 SRS AIRBAGs deploy as soon as a collision occurs.
2 After deployment, SRS AIRBAGs start to deflate immediately so that the driver's vision is not obstructed.
*1: Knee airbag
*2: Seat cushion airbag

If the following sensors detect a predetermined amount of force during a frontal collision, the control module sends signals to the airbag module(s) (only driver's module or both driver's and front passenger's modules) instructing the module(s) to inflate the SRS frontal airbag(s).

- The front impact sensors
- The impact sensors in the airbag control module

Then both airbag modules produce gas, which instantly inflates the driver's and passenger's SRS frontal airbags. The SRS knee airbag is also inflated in combination with the SRS frontal airbags.

▼ After deployment

After deployment, the SRS airbag immediately starts to deflate so that the driver's vision is not obstructed and the driver's ability to maintain control of the vehicle is not impaired.

This vehicle is equipped with the occupant detection system for the front passenger's seat. The SRS system detects whether the front passenger's seat is occupied by a passenger or not. If the seat is not occupied, the system does not inflate the front passenger's SRS airbag.

▼ Example of the type of accident

The SRS frontal airbags (and also the SRS knee airbags) are designed as follows.

- To deploy in the event of an accident involving a moderate to severe frontal collision
- To function on a one-time-only basis

The SRS frontal airbags (and also the SRS knee airbags) are not designed as follows.

- To deploy in most lesser frontal impacts*1
- To deploy in most side or rear impacts or in most rollover accidents*2

*1: Because the necessary protection can be achieved by the seatbelt alone.

*2: Because deployment of only the driver's SRS frontal airbag or both the driver's and front passenger's SRS frontal airbags would not protect the occupant in those situations.

SRS airbag deployment depends on the level of force experienced in the passenger compartment during a collision. That level differs from one type of collision to another, and it may have no bearing on the visible damage done to the vehicle itself.

▽ When will the SRS frontal airbag most likely deploy?

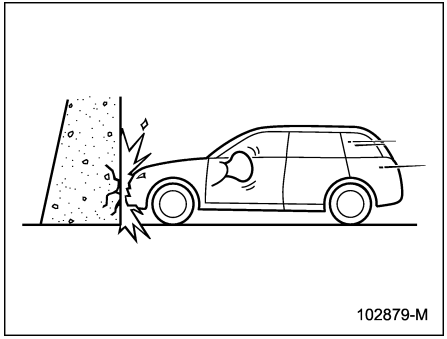

A head-on collision against a thick concrete wall at a vehicle speed of 20 to 30 km/h (12 to 19 mph) or higher activates the SRS frontal airbag. The SRS frontal airbag will also be activated when the vehicle is exposed to a frontal impact similar in fashion and magnitude to the collision described above.

▽ At what other times might the SRS frontal airbag deploy?

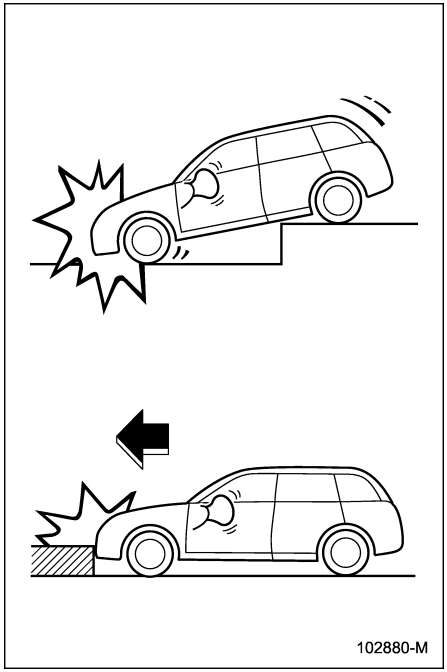

– CONTINUED –

The SRS frontal airbag may be activated when the vehicle sustains a hard impact in the undercarriage area from the road surface (such as when the vehicle plunges into a deep ditch, is severely impacted or knocked hard against an obstacle on the road such as a curb).

▽ **When is the SRS frontal airbag unlikely to deploy?**

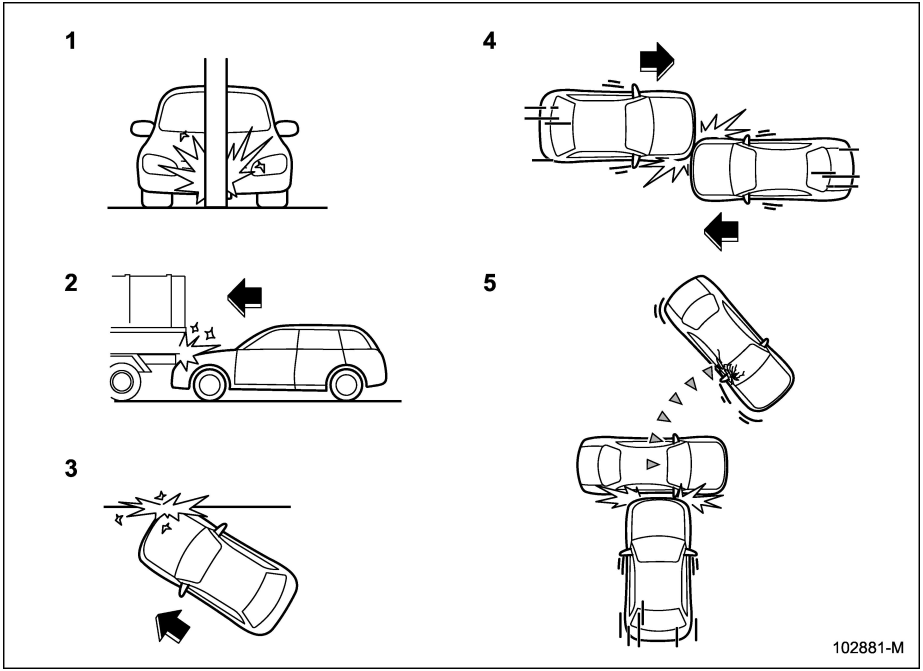

1 The vehicle strikes an object, such as a telephone pole or sign pole.
2 The vehicle slides under the load bed of a truck.
3 The vehicle sustains an oblique offset frontal impact.
4 The vehicle sustains an offset frontal collision.
5 The vehicle strikes an object that can move or deform, such as a parked vehicle.

There are many types of collisions which might not necessarily require SRS frontal airbag deployment. In the event of accidents like those illustrated, the SRS frontal airbag may not deploy depending on the level of accident forces involved.

– CONTINUED –

▽ When will the SRS frontal airbag not deploy?

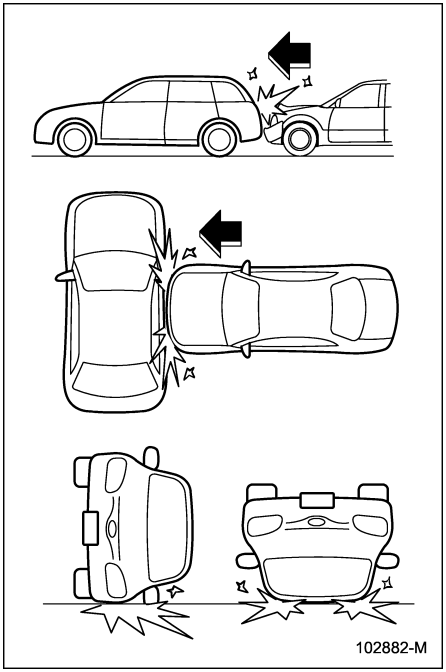

The SRS frontal airbags are not designed to deploy in most of the following cases.

- If the vehicle is struck from the side or from behind
- If the vehicle rolls onto its side or roof
- If the vehicle is involved in a low-speed frontal collision

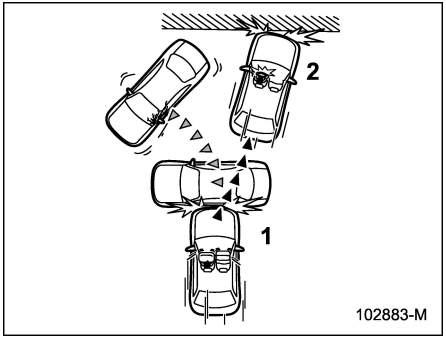

1 First impact
2 Second impact

In an accident where the vehicle is impacted more than once, the SRS frontal airbags deploy only once.

Example: In the case of a double collision, first with another vehicle, then against a concrete wall in immediate succession, once either or both of the driver's and front passenger's SRS frontal airbags is/are activated on the first impact, it/they will not be activated on the second impact.

■ SRS Seat Cushion Airbag Operation

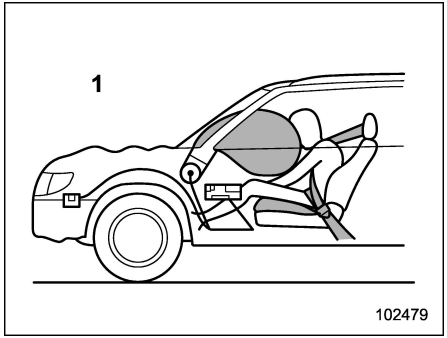

1 Passenger's side

⚠ WARNING

The SRS seat cushion airbag is designed not to deploy when the seatbelt for the corresponding seat is not fastened. For safety, all persons in the vehicle should fasten their seatbelts.

The SRS seat cushion airbags are designed to deploy simultaneously when the SRS frontal airbags deploy. For details about the operating conditions, refer to "SRS Airbag" ☞P108.

The front passenger's SRS seat cushion airbag is designed not to deploy in either of the following conditions.

- The front passenger's seatbelt is not fastened (even when the front passenger's frontal airbag ON indicator light illuminates while the OFF indicator light remains off).
- The front passenger's frontal airbag ON indicator light is off while the OFF indicator light illuminates.

NOTE

When the front passenger's SRS frontal airbag is deactivated by the occupant detection system, the front passenger's SRS seat cushion airbag is also deactivated.

■ SRS Side Airbag, SRS Far-Side Airbag (If Equipped) and SRS Curtain Airbag Operation

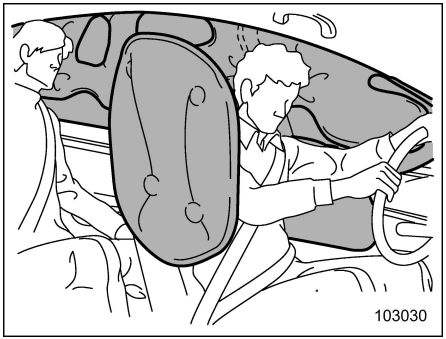

The driver's and front passenger's SRS side airbags and SRS curtain airbags deploy independently of each other since each has its own impact sensor. Therefore, they may not both deploy in the same accident. Also, the SRS side airbag, SRS far-side airbag and SRS curtain airbag deploy independently of the driver's and front passenger's SRS frontal airbags in the steering wheel and instrument panel.

An impact sensor, which senses impact force, is located in each of the following locations.

- In the left and right center pillars
- In the left and right rear wheel houses
- Under the rear center seat
- In the left and right front door
- Under the center of the instrument panel

The SRS side airbag, SRS far-side airbag and SRS curtain airbag deploy even when no one occupies the seat on the side on which an impact is applied.

The SRS side airbag and SRS far-side airbag are designed to deploy in the event of an accident involving a moderate to severe side impact collision.

The SRS curtain airbag is designed to deploy in the event of an accident involving a moderate to severe side impact collision or an offset frontal collision.

They are not designed to deploy in most lesser side impacts. Also, they are not designed to deploy in most frontal or most rear impacts because SRS side airbag, SRS far-side airbag and SRS curtain airbag deployment would not help the occupant in those situations. Each SRS side airbag, SRS far-side airbag and SRS curtain airbag are designed to function on a one-time-only basis.

SRS side airbag, SRS far-side airbag and SRS curtain airbag deployment depend on

– CONTINUED –

the level of force experienced in the passenger compartment during a side impact collision. That level differs from one type of collision to another, and it may have no bearing on the visible damage done to the vehicle itself.

▼ After deployment

After the deployment, the SRS side airbag immediately starts to deflate.

The SRS curtain airbag and SRS far-side airbag remains inflated for a while following deployment then slowly deflates. The SRS side airbag and SRS curtain airbag deploy even when no one occupies the seat on the side on which an impact is applied.

When the SRS side airbag, SRS far-side airbag and SRS curtain airbag deploy, a sudden, fairly loud inflation noise will be heard and some smoke will be released. These occurrences are a normal result of the deployment. This smoke does not indicate a fire in the vehicle.

▽ When will the SRS curtain airbag most likely deploy?

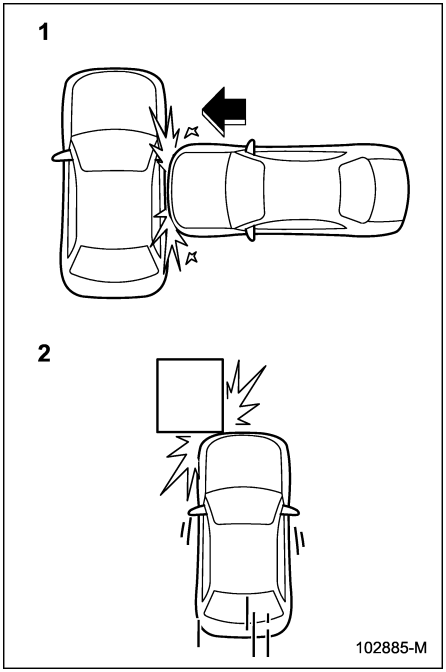

1 A severe side impact near the front seat.
2 An offset frontal collision that is severe enough to deploy the front airbag.

▽ When will the SRS side airbag and SRS far-side airbag (if equipped) most likely deploy?

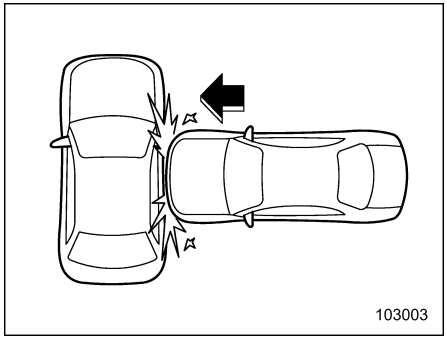

A severe side impact near the front seat.

▽ **When are the SRS side airbag, SRS far-side airbag (if equipped) and SRS curtain airbag unlikely to deploy?**

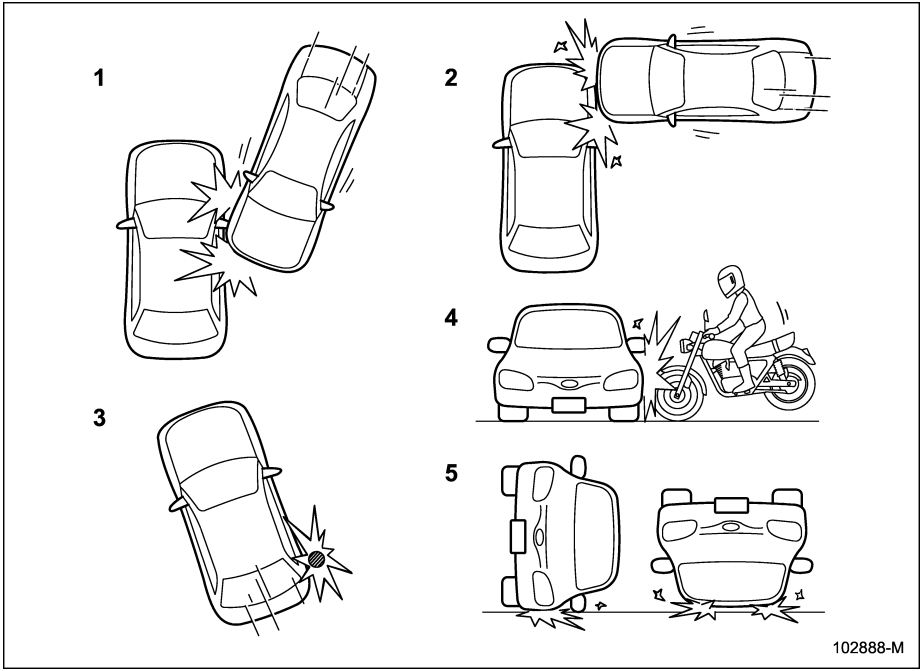

1 The vehicle is involved in an oblique side-on impact.
2 The vehicle is involved in a side-on impact in an area outside the vicinity of the passenger compartment.
3 The vehicle strikes a telephone pole or similar object.
4 The vehicle is involved in a side-on impact from a motorcycle.
5 The vehicle rolls onto its side or roof.

There are many types of collisions which might not necessarily require SRS side airbag, SRS far-side airbag and SRS curtain airbag deployment. In the event of accidents like those illustrated, the SRS side airbag, SRS far-side airbag and SRS curtain airbag may not deploy depending on the level of accident forces involved.

– CONTINUED –

▽ When will the SRS curtain airbag not deploy?

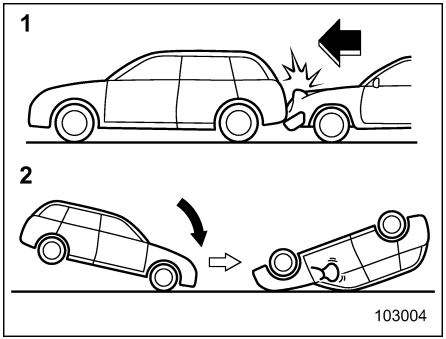

1 The vehicle is struck from behind.
2 The vehicle pitches end over end.

In the event of accidents like those illustrated, the SRS side airbag and SRS curtain airbag are not designed to deploy in most cases.

▽ When will the SRS side airbag and SRS far-side airbag (if equipped) not deploy?

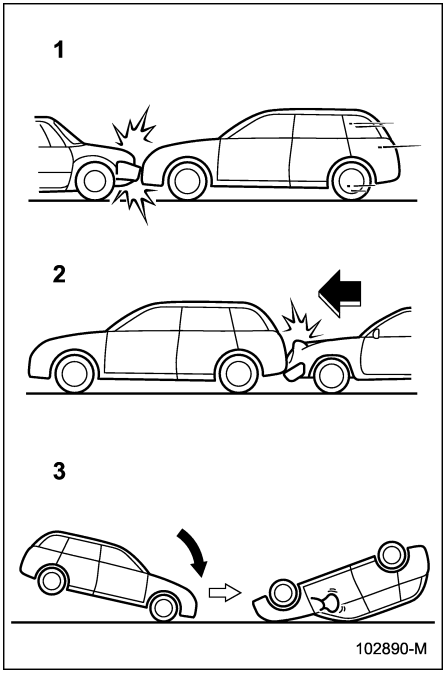

1 The vehicle is involved in frontal collision with another vehicle (moving or stationary).
2 The vehicle is struck from behind.
3 The vehicle pitches end over end.

In the event of accidents like those illustrated, the SRS far-side airbag is not designed to deploy in most cases.

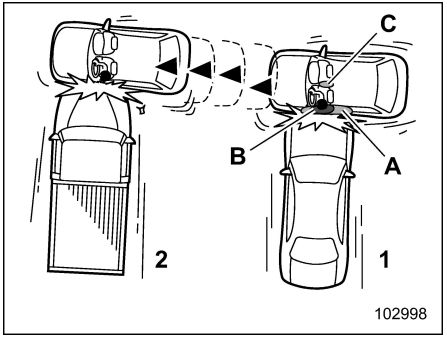

1 First impact
2 Second impact
A SRS curtain airbag
B SRS side airbag
C SRS far-side airbag

In an accident where the vehicle is struck from the side more than once, the SRS side airbag, SRS far-side airbag and SRS curtain airbag deploy only once.

Example: In the case of a double side impact collision, first with one vehicle and immediately followed by another from the same direction, once the SRS side airbag, SRS far-side airbag and SRS curtain

airbag are activated on the first impact, they will not be activated on the second.

■ SRS Airbag System Monitors

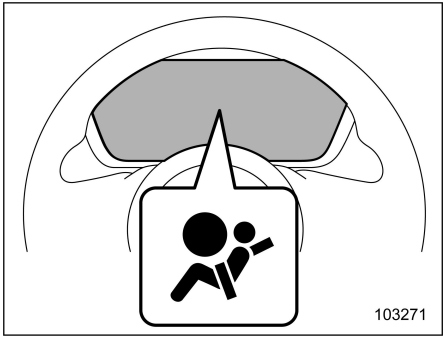

SRS airbag system warning light

A diagnostic system continually monitors the readiness of the SRS airbag system (including seatbelt pretensioners) with the ignition switch in the “ON” position. The SRS airbag system warning light will show normal system operation by illuminating for approximately 6 seconds when the ignition switch is turned to the “ON” position.

The diagnostic system monitors the components to ensure normal operation. For information on the components the system monitors, refer to “Components” ☞P104.

Note that the diagnostic system does not monitor the SRS airbag system warning light itself.

⚠ WARNING

If the warning light exhibits any of the following conditions, immediately stop the vehicle in a safe place, and we recommend that you consult a SUBARU dealer. Unless a technician checks and repairs the system as needed, the seatbelt pretensioners and/or the SRS airbag will not operate properly in the event of a collision, which may result in injury.

- **Flashing or flickering of the warning light**
- **No illumination of the warning light when the ignition switch is first turned to the “ON” position**
- **Continuous illumination of the warning light**
- **Illumination of the warning light while driving**

■ SRS Airbag System Servicing

⚠ WARNING

- **When discarding an airbag module or scrapping the entire vehicle damaged by a collision, we recommend that you consult your SUBARU dealer.**
- **The SRS airbag has no user-serviceable parts. Do not use electrical test equipment on any circuit related to the SRS airbag system. For required servicing of the SRS airbag, we recommend that you consult your nearest SUBARU dealer. Tampering with or disconnecting the system’s wiring could result in accidental inflation of the SRS airbag or could make the system inoperative, which may result in serious injury.**

⚠ CAUTION

If you need service or repair in areas indicated in the following list, we recommend that you have the work performed by an authorized SUBARU dealer. The SRS airbag control module, impact sensors

– CONTINUED –

and airbag modules are stored in these areas.

- Under the center of the instrument panel
- On both the right and left sides at the front of the vehicle
- Steering wheel and column and nearby areas
- Bottom of the steering column and nearby areas
- Top of the dashboard on front passenger's side and nearby areas
- Each front seat and nearby area
- Inside each center pillar
- Inside each front door
- In each roof side (from the front pillar to a point over the rear seat)
- Between the rear seat cushion and rear wheel house on each side
- Under the rear center seat

In the event that the SRS airbag is deployed, we recommend that you have the system replaced with genuine SUBARU parts at an authorized SUBARU dealer.

NOTE

In the following cases, we recommend that you contact your SUBARU dealer as soon as possible.

- The front part of the vehicle was involved in an accident in which the SRS frontal airbags did not deploy.
- The pad of the steering wheel, the cover over the front passenger's SRS frontal airbag, or either roof side (from the front pillar to a point over the rear seat) is scratched, cracked, or otherwise damaged.
- The center pillar, front door, rear wheel house or rear sub frame, or an area near these parts, was involved in an accident in which the SRS side airbag, SRS far-side airbag (if equipped) and SRS curtain airbag did not deploy.
- The fabric or leather of either front seatback is cut, frayed, or otherwise damaged.
- The rear part of the vehicle was involved in an accident in which no SRS airbag was deployed.

■ Precautions against Vehicle Modification

⚠ WARNING

- To avoid accidental activation of the system or rendering the system inoperative, which may result in serious injury, no modifications should be made to any components or wiring of the SRS airbag system.

  This includes following modifications.

  – Installation of custom steering wheels
  – Attachment of additional trim materials to the dashboard
  – Installation of custom seats
  – Replacement of seat fabric or leather
  – Installation of additional fabric or leather on the front seat
  – Attachment of a hands-free microphone or any other accessory to a front pillar, a center pillar, a rear pillar, the windshield, a side window, an assist grip, or any other cabin surface that would be near a deploying SRS curtain airbag.

- Installation of additional electrical/electronic equipment such as a mobile two-way radio on or near the SRS airbag system components and/or wiring is not advisable. This could interfere with proper operation of the SRS airbag system.
- Modifications on or inside the front door panels for the purpose of a speaker replacement or sound insulation

- The impact sensors, which detect the pressure of an impact, are located in the doors. Do not modify any components of the doors or door trims, such as the addition of door speakers for example. Any modifications to the doors will create a risk of the airbag system becoming inoperative or unintended airbag deployment.
- Installation of a tire of different size and construction from the tires specified on the vehicle placard attached to the driver's door pillar or specified for individual vehicle models in this Owner's Manual.

CAUTION

Do not perform any of the following modifications. Such modifications can interfere with proper operation of the SRS airbag system.

- **Attachment of any equipment (bush bar, bullbar, winches, snow plow, skid/sump plate, etc.) to the front end other than genuine SUBARU accessory parts or parts that match the quality of genuine SUBARU accessory parts.**
- **Modification of the suspension system or front end structure.**
- **Attachment of any equipment (side steps or side sill protectors, etc.) other than genuine SUBARU accessory parts or parts that match the quality of genuine SUBARU accessory parts to the side body.**

We recommend that you always consult your SUBARU dealer if you want to install any accessory parts on your vehicle.

2-1. Keyless Access with Push-Button Start System 128
Safety Precautions 128
Locking and Unlocking by Holding the Access Key Fob 131
Unlock Using PIN Code Access 135
Power Saving Function 137
Power Saving Function of Access Key Fob 138
Disabling Keyless Access Function 138
Selecting Hazard Warning Flasher Operation 141
Warning Chimes and Warning Indicator 141
When Access Key Fob Does Not Operate Properly 141
Replacing Battery of Access Key Fob 141
Replacing Access Key Fob 141
Key Number Plate 141
Technical Information for Europe Models 142
2-2. Immobilizer 142
Immobilizer Indicator Light 142
Key Replacement 142
Technical Information of the Radio Wave Regulation 143
2-3. Remote Keyless Entry System 143
Locking the Doors 144
Unlocking the Doors 144
Automatic Locking (Models without Double Locking System) 144
Unlocking the Rear Gate 145
Opening/Closing All the Windows (except Australia Models) 145
Selecting Hazard Warning Flasher Operation 145
Replacing the Battery 145
Replacing Lost Access Key Fobs 145
2-4. Door Locks 146
Locking and Unlocking from the Outside 146
Locking and Unlocking from the Inside 147
Automatic Door Locking/Unlocking 148
Key Lock-In Prevention Function (Models without Double Locking System) 148
Battery Drainage Reduction Function 149
2-5. Double Locking System (If Equipped) 150
To Set Double Locking System 150
To Cancel Double Locking System 150
In an Emergency 151
If a Battery Goes Dead 151
To Reset Double Locking System 151
2-6. Function Disabling Unlocking with the Power Door Locking Switch (Australia Models) 151
2-7. Child Safety Locks 152
2-8. Windows 152
Power Window Operation 153
Initialization of Power Window 155
2-9. Rear Gate 155
Power Rear Gate (If Equipped) 157
2-10. Sunroof (If Equipped) 166
Sunroof Switches 167
Sliding Sunroof 167
Sunshade 167

2-1. Keyless Access with Push-Button Start System

The following access key fobs are provided with the vehicle.

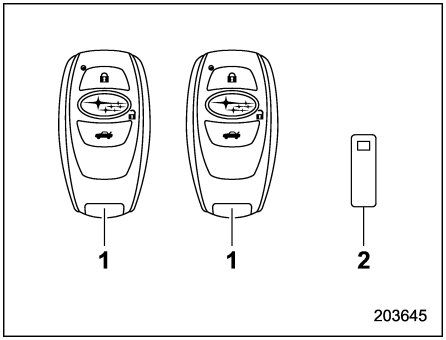

1 Access key fob
2 Key number plate

The keyless access with push-button start system allows you to perform the following functions when you are carrying the access key fob.

- Locking and unlocking all the doors (including the rear gate and the fuel filler lid)
- Starting and stopping the e-BOXER system. For detailed information, refer to “Starting and Stopping the e-BOXER System” ☞P318.

NOTE

- **Your vehicle may have three access key fobs depending on the vehicle market for which it was designed.**
- **The remote keyless entry system can be used to control the following functions.**
  - **Locking and unlocking all the doors (including the rear gate and the fuel filler lid)**
  - **Opening/closing the windows (except Australia models)**

  For details, refer to “Remote Keyless Entry System” ☞P143.
- **Carefully store the key number plate supplied with the access key fob. It is necessary for vehicle repair and additional registration of access key fobs. For details, refer to “Key Replacement” ☞P142.**

An emergency key is attached to each access key fob.

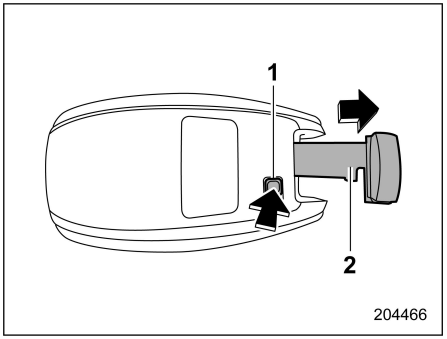

1 Release button
2 Emergency key

While pressing the release button of the access key fob, take out the emergency key.

The emergency key is used for locking and unlocking the driver’s door.

■ Safety Precautions

⚠ WARNING

- **If you wear an implanted pacemaker or an implanted defibrillator, stay at least 22 cm (8.7 in) away from the transmitting antennas installed on the vehicle.**

  The radio waves from the transmitting antennas on the vehicle

could adversely affect the operation of implanted pacemakers and implanted defibrillators.

If you wear electronic medical equipment other than an implanted pacemaker or an implanted defibrillator, before using the keyless access with push-button start system, refer to "Radio waves used for the keyless access with push-button start system" mentioned later, and contact the electronic medical equipment manufacturer for more information. The radio waves from the transmitting antennas on the vehicle could adversely affect the operation of the electronic medical equipment.

"Radio waves used for the keyless access with push-button start system"

- The keyless access with push-button start system uses radio waves of the following frequency* in addition to the radio waves used for the remote keyless entry system. The radio waves are periodically output from the antennas installed on the vehicle as shown in the following illustrations.

  *: Radio frequency: 134.2 kHz

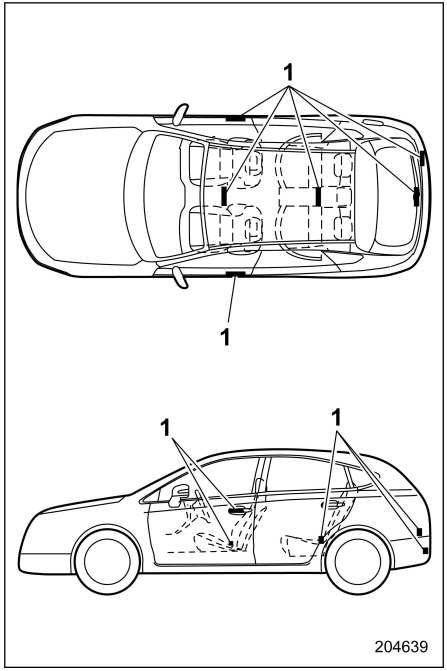

1 Antennas

CAUTION

- Never leave or store the access key fob inside the vehicle or within 2 m (6.6 ft) around the vehicle (e.g., in the garage). The access key fob may be locked inside the vehicle, or the battery may discharge rapidly. Note that the push-button ignition switch may not turn on in some cases depending on the location of the access key fob.
- The access key fob contains electronic components. Observe the following precautions to prevent malfunctions.
  - It is recommended to have the access key fob battery replaced at an authorized SUBARU dealer to avoid the risk of damage.
  - Do not get the access key fob wet. If the access key fob gets wet, wipe it off immediately and let it dry completely.
  - Do not apply strong impacts to the access key fob.
  - Never leave the access key fob in direct sunlight or anywhere that may become hot,

– CONTINUED –

such as on the dashboard. It may damage the battery or cause circuit malfunctions.

– Do not wash the access key fob in an ultrasonic washer.

– Do not leave the access key fob in humid or dusty locations. Doing so may cause malfunctions.

– Keep the access key fob away from magnetic sources.

– Do not leave the access key fob near a personal computer or home electrical appliance.

– Do not leave the access key fob near a battery charger or any electrical accessories.

– Do not apply metallic window tint or attach metallic objects to the windows.

– Do not fit non genuine accessories or parts.

- If the access key fob is dropped, the integrated emergency key inside may become loose. Be careful not to lose the emergency key.
- When traveling in an airplane, do not press the button of the access key fob. If any button of the access key fob is pressed, radio waves are emitted and may affect the operation of the airplane. In a bag, take measures to prevent the buttons from being pressed accidentally.

NOTE

- The operational/non-operational setting for the keyless access function can be changed. For the setting procedure, refer to "Disabling Keyless Access Function" ☞P138.
- For detailed information about the operation method for the push-button ignition switch while the keyless access function is switched to the non-operational mode, refer to "Access Key Fob – If Access Key Fob Does Not Operate Properly" ☞P449.
- The keyless access with push-button start system uses weak radio waves. The status of the access key fob and environmental conditions may interfere with the communication between the access key fob and the vehicle under the following conditions, and it may not be possible to lock or unlock the doors or start the e-BOXER system.
  – When operating near a facility where strong radio waves are transmitted, such as a broadcast station and power transmission lines.
  – When products that transmit radio waves are used, such as an access key fob or a remote transmitter key of another vehicle.
  – When carrying the access key fob of your vehicle together with the access key fob or the remote transmitter of another vehicle.
  – When the access key fob is placed near wireless communication equipment such as a cell phone.
  – When the access key fob is placed near a metallic object.
  – When metallic accessories are attached to the access key fob.
  – When carrying the access key fob with an electronic appliance such as a laptop computer.
  – When the battery of the access key fob is discharged.
- The access key fob is always communicating with the vehicle and is continuously using the battery. Although the life of the battery varies depending on the operating conditions, it is approximately 1 to 2 years. If the battery becomes fully dis-

charged, replace it with a new one.

- **If an access key fob is lost, it is recommended that all of the remaining access key fobs be reregistered. For reregistration of an access key fob, we recommend that you contact a SUBARU dealer.**
- **For a spare access key fob, we recommend that you contact a SUBARU dealer.**
- **Up to 7 access key fobs can be registered for one vehicle.**
- **Do not leave the access key fob in the storage spaces inside the vehicle, such as the door pocket, dashboard or inside the corner of the cargo area. Vibrations may damage the key fob or turn on the switch, possibly resulting in a lockout.**
- **After the 12 V battery is discharged or replaced, initialization of the steering lock system may be required to start the e-BOXER system. In this case, perform the following procedure to initialize the steering lock.**
  (1) Turn the push-button ignition switch to the "OFF" position. For details, refer to "Switching Power Status" ☞P172.
  (2) Open and close the driver's door.
  (3) Wait for approximately 10 seconds.

  When the steering is locked, the initialization is completed.

- **Do not leave the access key fob in the following places.**
  – On the instrument panel
  – On the floor
  – Inside the glove box
  – Inside the door trim pocket
  – On the rear seat
  – In the cargo area

  If you do, the following situations may occur.
  – The access key fob is mistakenly locked inside the vehicle.
  – A false warning issues although no malfunction actually occurs.
  – No warning issues even when a malfunction occurs.

■ Locking and Unlocking by Holding the Access Key Fob

When the access key fob is carried within the operating range, all the doors (including the rear gate and the fuel filler lid) can be locked/unlocked just by touching the door handle.

NOTE

The vehicle can also be locked/unlocked with the remote keyless entry system. For details, refer to "Remote Keyless Entry System" ☞P143.

▼ Operating ranges

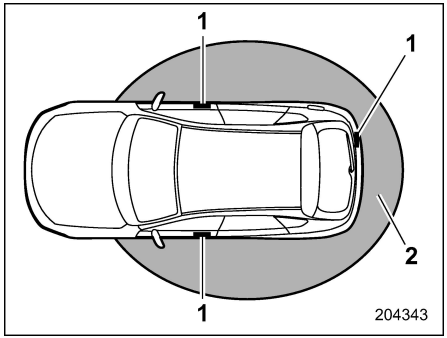

1 Antennas
2 Operating range

– CONTINUED –

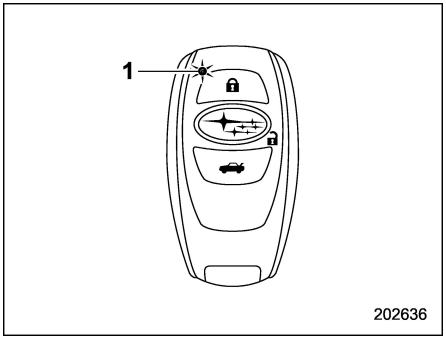

1 LED indicator

When the access key fob is within the operating range, the LED indicator on the access key fob flashes. When the keyless access functions are disabled, the LED indicator does not flash unless a button on the access key fob is pressed.

NOTE

- **If the access key fob is placed too close to the vehicle body, the keyless access functions may not operate properly. If it does not operate properly, repeat the operation from farther away.**
- **If the access key fob is placed near the ground or in an elevated location from the ground, even if it is in the indicated operating range, the keyless access function may not operate properly.**
- **When the access key fob is within the operating range, it is possible for anyone, even someone who is not carrying the access key fob, to operate the keyless access function. Note that the keyless access function can be operated only by the door handle, door lock sensor or rear gate opener button in the operating range in which the access key fob is detected.**
- **It is not possible to lock the doors, rear gate and fuel filler lid using the keyless access function when the access key fob is inside the vehicle. However, depending on the status of the access key fob and the environmental conditions, the access key fob may be locked inside the vehicle. Before locking the vehicle, make sure that you have the access key fob.**
- **When the battery of the access key fob is discharged, or when operating it in a location with strong radio waves or noise (e.g., near a radio tower, power plant, broadcast station or an area where wireless equipment is used), or while talking on a cell phone, the operating ranges may be reduced, or the keyless access function may not operate. In such a case, perform the procedure described in "Locking and Unlocking" ☞P449.**
- **The doors may lock or unlock when the car is being washed or exposed to a significant amount of water that touches the door handle while the key fob is still in the operating range.**

▼ How to lock and unlock

It is possible to perform the following operations when you are carrying the access key fob.

- Lock and unlock the doors and the fuel filler lid.
- Lock and unlock the rear gate.

NOTE

- **It is not possible to lock the doors, rear gate and fuel filler lid using the keyless access function when the push-button ignition switch is in the "ACC" or "ON" position. Refer to "Switching Power Status" ☞P172.**
- **If the door handle is gripped with a gloved hand, the door lock may not be released.**
- **If the door lock sensor is touched four times or more repeatedly, the system will ignore the sensor operation.**

- **When performing the locking procedure too quickly, locking may not complete. After performing the locking procedure, it is recommended to pull the rear door handle to confirm that the doors have been locked.**
- **If any of the doors (including the rear gate) is not fully closed, the following will occur to alert you.**
  - **An electronic chirp sounds five times.**
  - **The hazard warning flashers flash five times.**
- **If any of the doors or the rear gate is open, the doors, the rear gate and the fuel filler lid cannot be locked.**
- **Within 3 seconds after locking the doors and the rear gate using the keyless access function, it is not possible to unlock the doors and/or the rear gate using the keyless access function.**
- **When locking, be sure to carry the access key fob to prevent locking the access key fob in the vehicle.**
- **The setting of the hazard warning flasher operation can be changed by operating the center information display. For details, refer to "Car settings" ☞P229. Also, the setting of the hazard warning flasher operation can be changed by your SUBARU dealer. We recommend that you contact your SUBARU dealer for details.**

▽ Locking with the door lock sensor

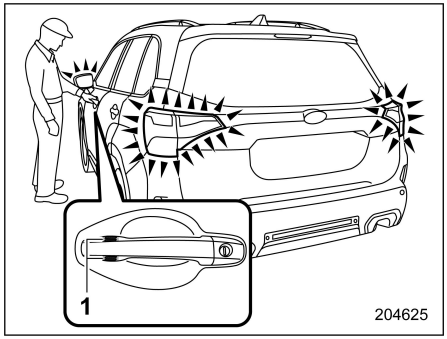

1 Door lock sensor

Carry the access key fob, close all the doors (including the rear gate) and touch the door lock sensor on the door handle. All the doors (including the rear gate and the fuel filler lid) will be locked. Also, the hazard warning flashers will flash once.

NOTE

After touching the door lock sensor to lock all of the doors (including the rear gate), if you touch the door lock sensor once more to attempt the lock operation without first unlocking the doors, nothing will happen, even if the door lock sensor is touched. In this case, perform the unlocking operation once first. You can then touch the door lock sensor to lock the doors.

▽ Locking with the rear lock button

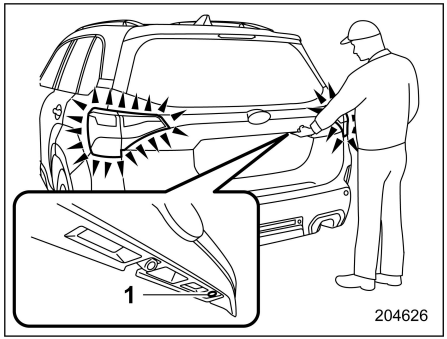

1 Rear lock button

Carry the access key fob, close all doors including the rear gate and press the rear lock button. The rear gate, the fuel filler lid and all doors will be locked. Also, the hazard warning flashers will flash once.

– CONTINUED –

▽ Unlocking

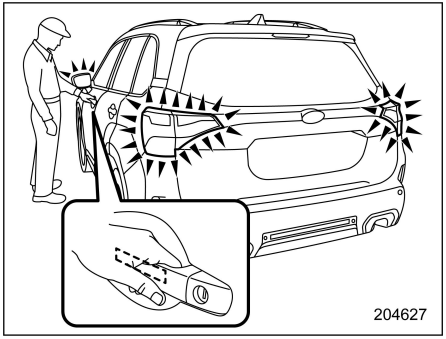

Carry the access key fob, and touch the sensor behind the door handle.

- **Models without double locking system:**

All the doors (including the rear gate and the fuel filler lid) will be unlocked. Also, the hazard warning flashers will flash twice.

- **Models with double locking system:**
  - The driver's door handle:
    Only the driver's door and the fuel filler lid will be unlocked.
  - The front passenger's door handle:
    All the doors (including the rear gate and the fuel filler lid) will be unlocked.

  Also, the hazard warning flashers will flash twice.

▽ Opening rear gate

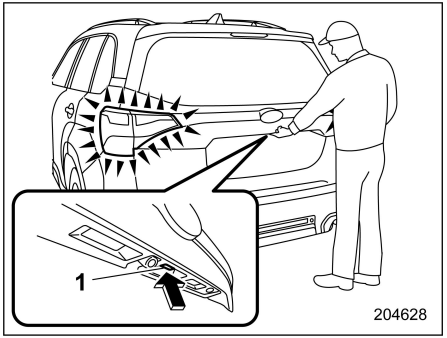

1 Rear gate opener button

Carry the access key fob, and press the rear gate opener button.

- **Models without double locking system:**

All doors (including the rear gate and the fuel filler lid) will be unlocked, and the rear gate will be opened. Also, the hazard warning flashers will flash twice.

- **Models with double locking system:**

Only the rear gate will unlock and open. Also, the hazard warning flashers will flash twice.

▼ Door unlock selection function

When the door is unlocked using the keyless access function, only the doors that were set and the fuel filler lid can be unlocked.

The settings can be changed with the following methods.

- The setting can be changed by operating the center information display.
  For details, refer to "Car settings" ☞P229.
- The setting can be changed by a SUBARU dealer.

▼ Automatic locking (models without double locking system)

If any of the doors or the rear gate was not opened within 30 seconds after unlocking, they will be automatically locked again.

The function's operational/non-operational setting and the time until automatic locking takes place can be changed by a SUBARU dealer. For more details, we recommend that you contact a SUBARU dealer.

The setting and the time can be changed by operating the center information display. For details, refer to "Car settings" ☞P229.

■ Unlock Using PIN Code Access

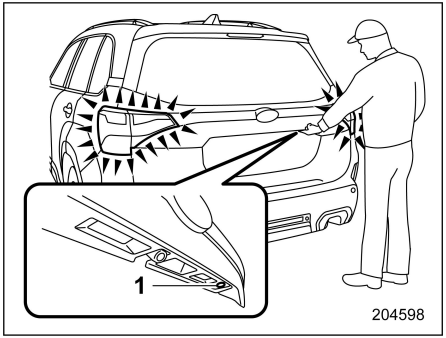

1 Rear lock button

While all the doors (including the rear gate and the fuel filler lid) are locked, you can unlock them without a key by pressing the rear lock button.

NOTE

PIN Code Access will be helpful if the key is accidentally left in the vehicle. It is recommended that a 5-digit security code (PIN code) is registered.

– CONTINUED –

▼ Registration for a PIN code

Steps		Operation	Time from the previous step
1		Turn off the ignition switch.	—
2		Close all doors (including the rear gate).	—
3		Press and hold the “🔒” button on the access key fob, then press and hold the rear lock button until a chirp sounds intermittently.	—
4		Press the “🔓” button on the access key fob.	Within 30 seconds
5		Input the PIN code using the rear lock button within 30 seconds after the chirp sound of step 4. For example, to register “32468” as the PIN code, perform the following procedure.	Within 30 seconds
	(1)	Press the button three times.	
	(2)	After a chirp sounds once, press the button twice.	
	(3)	After a chirp sounds once, press the button four times.	
	(4)	After a chirp sounds once, press the button six times.	
	(5)	After a chirp sounds once, press the button eight times.	
6		Perform step 5 again within approximately 30 seconds after the chirp starts sounding intermittently.	—
7		All doors will be unlocked and locked. Then the PIN code will be registered.	—

NOTE

Press the “🔓” button within 30 seconds of step 6 to end the preparation mode and move on to the registration stage. Unless the “🔓” button is pressed within 30 seconds after step 6, the PIN code registration will be canceled.

NOTE

- **Press the rear lock button ten times to enter “0”.**
- **Change the PIN code frequently to protect your vehicle from theft.**
- **If you have lent your vehicle to another person, confirm that the PIN code has not been changed or deleted. If the PIN code has been changed or deleted, reregister a new PIN code.**
- **If you make an error during the registration procedure, press the “🔒” button on the access key fob. Then start over from the step 1.**
- **To protect your vehicle from theft, you cannot register “00000” to “99999” or “12345” as a PIN code.**
- **Do not register your vehicle license plate number or simple numbers such as “11122” or “12121” as a PIN code. Doing so will increase the risk of vehicle theft.**
- **When you try to register “22222”, the registered PIN code will be deleted. You cannot unlock the doors by PIN Code Access until a new code is registered.**
- **After registering a new PIN code, make sure that you can unlock the doors using the PIN code.**
- **The PIN code cannot be deleted while the keyless access function is disabled by operating the access key fob.**
- **Reregister the PIN code in the following case.**
  - **When you forget the PIN code**
  - **When you want to change the PIN code**

▼ Unlocking

Perform steps (1) to (5) of step 5 described in “Registration for a PIN code”.

NOTE

- **You cannot unlock by PIN Code Access in the following cases.**
  - **When the access key fob is within the operating ranges**
  - **When the ignition switch is in the “ACC” or “ON” position**
- **If you make an operation error during the unlocking procedure, start over with the unlocking procedure after waiting for 5 seconds or longer.**
- **To protect your vehicle from theft, a buzzer will sound if incorrect PIN codes are entered five times continuously. If this occurs, you cannot unlock the doors by PIN Code Access for 5 minutes.**

■ Power Saving Function

To protect the access key fob battery and the 12 V battery, the keyless access function will be disabled as follows.

- When the keyless access function and the remote keyless entry system have not been used for 2 weeks or longer while all doors are locked.
- When the access key fob has been left in the operating range for 10 minutes or longer while all doors are locked, the keyless access function will be disabled.

▼ Recovery from power saving mode

When one of the following operations is performed, the keyless access function will be recovered.

- Unlock by gripping the door handle (only when the sensors on the front passenger’s door are not disabled) or pressing the rear gate opener button on the rear gate.
- Lock or unlock by the remote keyless entry system.
- Open a door and then close it.
- Turn the push-button ignition switch to the “ON” position.

– CONTINUED –

■ Power Saving Function of Access Key Fob

This function stops the access key fob from receiving signals and helps minimize the battery consumption of the access key fob.

1. Press the "🔒" button twice while holding the "🔒" button.

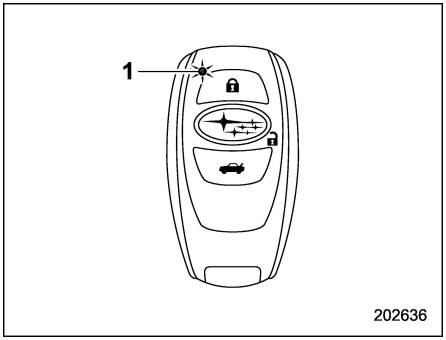

1 LED indicator

2. Confirm that the LED indicator blinks 4 times to notify that the setting is complete.

When the access key fob is in the power save mode, the keyless access function and push-button start system will not be available.

To cancel the power save mode, press one of the buttons on the access key fob.

■ Disabling Keyless Access Function

⚠ WARNING

If you have an implanted pacemaker or an implanted defibrillator, perform the procedure "By operating the driver's door" ☞P140 to disable the keyless access function. If you perform the procedure "By operating the access key fob" ☞P138, the operation of an implanted pacemaker or implanted defibrillator may be affected by the radio waves from the transmitting antennas installed on the vehicle.

When the vehicle is not going to be used for a long time, or when you choose not to use the keyless access function, the keyless access function can be disabled.

NOTE

- **If the access key is kept in or comes near the vehicle, the system becomes active and both the vehicle and access key batteries' energy will be consumed. If this occurs frequently or continuously, both the vehicle and access key batteries can become fully drained.**
- **The locking and unlocking function by the remote keyless entry system is not disabled.**
- **To start the e-BOXER system while the functions are disabled, perform the procedure described in "Starting the e-BOXER system" ☞P450.**

▼ Disabling functions

▽ By operating the access key fob

To disable the keyless access function by operating the access key fob, register a PIN code for PIN Code Access. For details about registering a PIN code, refer to "Unlock Using PIN Code Access" ☞P135.

1. Open the driver's door.

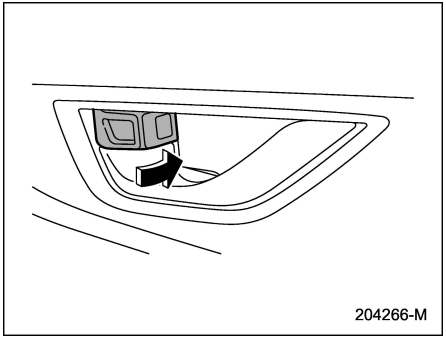

2. Rotate the lock lever forward.

3. Press and hold the “🔒” button and “🚗” button on the access key fob simultaneously for more than 5 seconds.

A chirp sound will be heard, and the function will be disabled.

– CONTINUED –

▽ By operating the driver's door

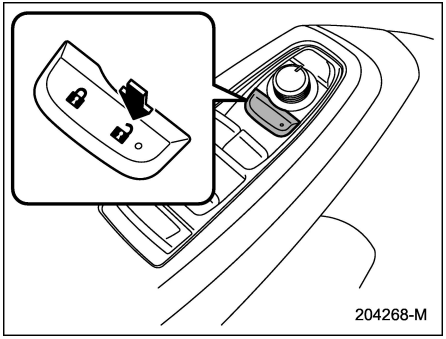

To disable the keyless access function by operating the driver's door, perform the following procedures.

Steps	Operation	Time	Status
1	Sit in the driver's seat, and close the door.	—	Close
2	Push "🔒" on the power door locking switch.	—	Close
3	Open the driver's door.	Within 5 sec.	Close→Open
4	Push "🔒" on the power door locking switch twice.	Within 5 sec.	Open
5	Close and open the driver's door twice.	Within 10 sec.	Open→Close→ Open→Close→Open
6	Push "🔒" on the power door locking switch twice while the door is open.	Within 10 sec.	Open
7	Close and open the driver's door once.	Within 10 sec.	Open→Close→Open
8	Close the door.	Within 5 sec.	Open→Close

A chirp will sound and the functions will be disabled.

NOTE

In steps 4 and 6, press the power door locking switch firmly. If the switch is not pressed firmly, the functions may not be disabled.

▼ Enabling functions

When the procedure to disable the functions is performed again, a chirp sound will be heard, and the functions are enabled.

NOTE

- **The keyless access function will be enabled only if you perform the procedure in the same manner you disabled the function (for example, when disabling by operating the driver's door, the function will not be enabled even if you operate the access key fob).**
- **Press the push-button ignition switch if you do not know the procedure in which the keyless access function was disabled.**
  - **When disabling by operating the driver's door: a chirp will not be heard**
  - **When disabling by operating the access key fob: a chirp will be heard**

■ Selecting Hazard Warning Flasher Operation

Using the hazard warning flasher, the system will give you a visible signal when the doors are locked or unlocked. If desired, you can turn the hazard warning flashers off by operating the center information display. For details, refer to "Car settings" ☞P229. The setting can also be changed by a SUBARU dealer. We recommend that you consult your SUBARU dealer for details.

■ Warning Chimes and Warning Indicator

The keyless access with push-button start system is equipped with a warning chime and the access key warning indicator in order to minimize improper operations and help protect your vehicle from theft.

For details, refer to "Warning Chimes and Warning Indicator of the Keyless Access with Push-Button Start System" ☞P193.

■ When Access Key Fob Does Not Operate Properly

Refer to "Access Key Fob – If Access Key Fob Does Not Operate Properly" ☞P449.

■ Replacing Battery of Access Key Fob

Refer to "Replacing Battery of Access Key Fob" ☞P514.

■ Replacing Access Key Fob

Access key fobs can be replaced at SUBARU dealers. For more details, we recommend that you contact a SUBARU dealer.

■ Key Number Plate

The key number is stamped on the key number plate attached to the key set. Write down the key number and keep it in another safe place, not in the vehicle. This number is needed to make a replacement key if you lose your key or lock it inside the vehicle.

For information on making replacement keys, refer to "Key Replacement" ☞P142.

– CONTINUED –

■ Technical Information for Europe Models

- This device complies with the essential requirements of Directive 2014/53/EU. A copy of the original Declaration of Conformity and the CE marking are found in chapter 13.
- Hereby, DENSO CORPORATION declares that this SU19S-1/14AKB is in compliance with the essential requirements and other relevant provisions of Directive 2014/53/EU.

2-2. Immobilizer

The immobilizer system is designed to prevent an unauthorized person from starting the e-BOXER system. Only keys registered with your vehicle's immobilizer system can be used to operate your vehicle. If e-BOXER system start is attempted with an unregistered access key fob, the e-BOXER system will not start. Even if the e-BOXER system does start, it will stop after a few seconds. This system, however, is not a 100% anti-theft guarantee.

⚠ CAUTION

- **Do not place the key under direct sunlight or anywhere it may become hot.**
- **Do not get the key wet. If the key gets wet, wipe it dry with a cloth immediately.**
- **Do not modify or remove the system. If modified or removed, the proper operation of the system cannot be guaranteed.**

NOTE

- **To protect your vehicle from theft, please pay close attention to the following security precautions:**
  - **Never leave your vehicle unattended with its keys inside.**
  - **Before leaving your vehicle, close all windows and the sunroof (if equipped), and lock all the doors (including the rear gate and the fuel filler lid).**
  - **Do not leave spare keys or any record of your key number in the vehicle.**
- **The vehicle has a maintenance-free type immobilizer system.**

■ Immobilizer Indicator Light

Refer to "Immobilizer Indicator Light" ☞P198.

■ Key Replacement

Your key number plate will be required if you ever need a replacement key made. Any new key must be registered for use with your vehicle's immobilizer system before it can be used. The maximum number of keys that can be registered for use with one vehicle is seven.

One key that has already been registered is required in order to register a new key.

NOTE

If you lose a key, the lost key's ID code still remains in the memory of the vehicle's immobilizer system. For security reasons, the lost key's ID code should be erased from the memory. To erase the lost key's ID code, all keys that will be used are required.

For details about new key registration and erasing the lost key's ID code, we recommend that you contact your SUBARU dealer.

■ Technical Information of the Radio Wave Regulation

These devices comply with the essential requirements and provisions such as the Radio and Telecommunications Terminal Equipment Directive 1999/5/EC and Radio Equipment Directive 2014/53/EU.

Requirements and provisions differ depending on the country.

See chapter 13 to confirm the information relevant to each country (e.g., a copy of the original Declaration of Conformity and the CE marking are required for the EU).

2-3. Remote Keyless Entry System

⚠ CAUTION

- **Do not expose the access key fob to severe shocks, such as those experienced as a result of dropping or throwing.**
- **Do not take the access key fob apart except when replacing the battery.**
- **Do not get the access key fob wet. If it gets wet, wipe it dry with a cloth immediately.**
- **When you carry the access key fob on an airplane, do not press the button of the access key fob while in the airplane. When any button of the access key fob is pressed, radio waves are sent and may affect the operation of the airplane. When you carry the access key fob in a bag on an airplane, take measures to prevent the buttons of the access key fob from being pressed.**

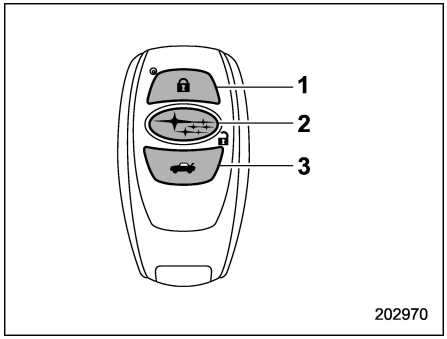

Access key fob
1 Lock
2 Unlock
3 Rear gate unlock button

The remote keyless entry system has the following functions.

- Locking and unlocking all the doors (including the rear gate and the fuel filler lid)
- Operation of all windows (except Australia models).*

*: To use this function, it must first be activated by your SUBARU dealer.

The operable distance of the remote keyless entry system is approximately 10 meters (30 feet). However, this distance will vary depending on environmental conditions. The system's operable dis-

– CONTINUED –

tance will be shorter in areas near a facility or electronic equipment emitting strong radio waves such as a power plant, broadcast station, TV tower, or remote controller of home electronic appliances.

NOTE

- **The remote keyless entry system does not operate when any of the doors (including the rear gate) is not fully closed.**
- **The hazard warning flashers will flash once or twice when the access key fob button is pressed in the following cases.**
  - **When locking the doors**
  - **When unlocking the doors**
  - **When unlocking the rear gate**

If desired, you can turn the hazard warning flashers off by operating the center information display. For details, refer to "Car settings" ☞P229. The setting can also be changed by a SUBARU dealer. We recommend that you consult your SUBARU dealer for details.

■ Locking the Doors

Press the "🔒" button to lock all the doors (including the rear gate and the fuel filler lid). The hazard warning flashers will flash once.

If any of the doors (including the rear gate) is not fully closed, the following will occur to alert you.

- An electronic chirp sounds five times.
- The hazard warning flashers flash five times.

■ Unlocking the Doors

Press the unlock button on the access key fob near the vehicle.

▼ **Models without door unlock selection function**

- **Models without double locking system:**

All the doors (including the rear gate and the fuel filler lid) will be unlocked. Also, the hazard warning flashers will flash twice.

- **Models with double locking system:**

1. Only the driver's door and the fuel filler lid will be unlocked. Also, the hazard warning flashers will flash twice.
2. If you press the unlock button again within 5 seconds of unlocking the driver's door, all of the other doors and the rear gate will be unlocked.

▼ **Models with door unlock selection function**

NOTE

For security reasons, confirm the setting is set as "operational" or "non-operational".

The door unlock selection function makes it possible to unlock the driver's door without unlocking any other doors. The operational/non-operational setting for this function can be changed by a SUBARU dealer.

- **Operational:**

Only the driver's door and the fuel filler lid will be unlocked. If you press the unlock button again within 5 seconds of unlocking the driver's door, all of the other doors and the rear gate will be unlocked.

- **Non-operational:**

All the doors (including the rear gate and the fuel filler lid) are unlocked.

For further details, we recommend that you consult a SUBARU dealer.

■ Automatic Locking (Models without Double Locking System)

When the unlock button is pressed, all the doors (including the rear gate and the fuel filler lid) are automatically locked 30

seconds later unless any one of the four doors or the rear gate is opened during that period.

The automatic locking function's operational/non-operational setting and the setting for the locking time period (the time period after which locking takes place) can be changed by a SUBARU dealer. We recommend that you contact the nearest SUBARU dealer for details. This setting can be changed by operating the center information display. For details, refer to "Car settings" ☞P229.

■ Unlocking the Rear Gate

Press the "🚗" button to unlock the rear gate. The hazard warning flashers will flash twice. This operation setting can be changed by a SUBARU dealer. We recommend that you consult your SUBARU dealer for details.

■ Opening/Closing All the Windows (except Australia Models)

⚠ WARNING

The remote keyless entry system should only be used to open and close all the windows when the area around all the windows is clearly visible and when you have checked that there is no danger of people being caught in all the windows.

With the e-BOXER system turned off, you can open and close all the windows by using the remote keyless entry system from outside the vehicle. Operate all the windows in the following way.

- Press and hold the lock button to close all the windows.
- Press and hold the unlock button to open all the windows.

NOTE

We recommend that you consult your SUBARU dealer to have this function set to enabled or disabled.

■ Selecting Hazard Warning Flasher Operation

Using the hazard warning flasher, the system will give you a visible signal when the doors are locked or unlocked. If desired, you can turn the hazard warning flashers off by operating the center information display. For details, refer to "Car settings" ☞P229. The setting can also be changed by a SUBARU dealer. We recommend that you consult your SUBARU dealer for details.

■ Replacing the Battery

Refer to "Replacing Battery" ☞P513.

■ Replacing Lost Access Key Fobs

If you lose an access key fob or want to purchase additional access key fobs (up to seven can be programmed), you should re-program all your access key fobs for security reasons. For details, we recommend that you contact your SUBARU dealer and have the access key fobs programmed into the remote keyless entry system.

2-4. Door Locks

■ Locking and Unlocking from the Outside

▼ How to lock and unlock the vehicle using the key

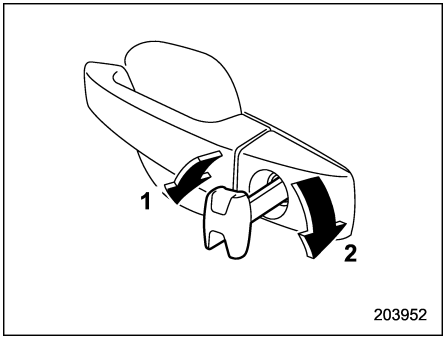

1 Rotate the key toward the front to lock.
2 Rotate the key toward the rear to unlock.

NOTE

The emergency key is directional. If the key cannot be inserted, change the direction that the grooved side is facing and insert it again.

- Models without a double locking system:

To lock the driver's door from the outside with the key, turn the key toward the front.

To unlock the door, turn the key toward the rear.

NOTE

To lock all doors including the rear gate, lock any door other than the driver's door from the inside of the vehicle, and then lock the driver's door. For details about locking from inside the vehicle, refer to "Locking and Unlocking from the Inside" ☞P147.

- Models with a double locking system:

To lock all the doors (including the rear gate and the fuel filler lid) from the outside with the key, turn the key toward the front.

To unlock all the doors (including the rear gate and the fuel filler lid), turn the key toward the rear.

▼ How to lock the vehicle without using the key

▽ Locking using lock lever

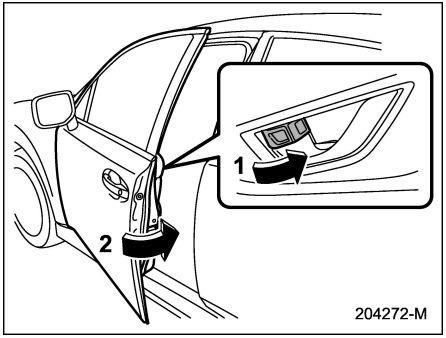

Example of front doors
1 Rotate the lock lever forward.
2 Hold the outside door handle pulled while closing the front doors.

To lock the front door from the outside without the key, rotate the lock lever forward and hold the outside door handle pulled while closing the door.

To lock the rear door from the outside without the key, rotate the lock lever forward and close the door.

NOTE

- **Make sure that you do not leave the key inside the vehicle before locking**

the doors from the outside without the key.

- **For models with the double locking system, it is not possible to place the lock lever on the driver's door in the locking position while the driver's door is open. The door lock levers function only when the driver's door is securely closed and the double locking system is not set.**

■ Locking and Unlocking from the Inside

▼ How to use the lock lever

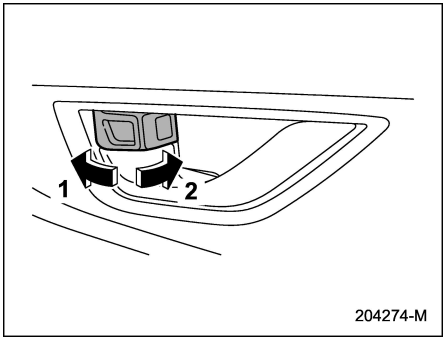

1 Rotate the lock lever rearward to unlock.
2 Rotate the lock lever forward to lock.

To lock the door from the inside, rotate the lock lever forward. To unlock the door from the inside, rotate the lock lever rearward.

The red mark on the lock lever appears when the door is unlocked.

Always make sure that all doors and the rear gate are closed before starting to drive.

⚠ WARNING

- **Keep all doors locked when you drive, especially when small children are in your vehicle.**

  Along with the proper use of seatbelts and child restraint systems, locking the doors reduces the chance of being thrown out of the vehicle in an accident.

  It also helps prevent passengers from falling out by preventing a door from being accidentally opened, and intruders from unexpectedly opening doors and entering your vehicle.
- **Do not pull the front door handle from inside while driving. The door could open even if it is locked.**

⚠ CAUTION

Do not pull the front inside door handle while operating the door lock. There is a risk that it will not be possible to open or lock the front doors.

NOTE

For models with the double locking system, if the double locking system is activated, the door will not be unlocked even when you move the door lock lever rearward.

▼ How to operate the power door locking switch

All the doors (including the rear gate and the fuel filler lid) can be locked and unlocked by the power door locking switch located on the driver's side door.

– CONTINUED –

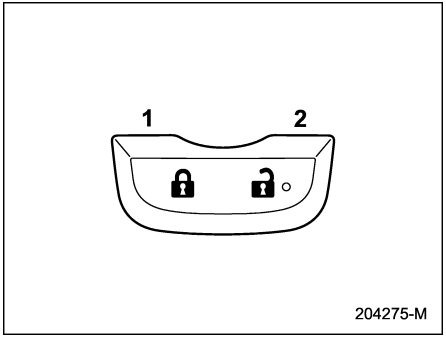

1 Lock
2 Unlock

NOTE

- **For models with the double locking system, pushing the unlocking position of the power door locking switch has no effect when the double locking system is activated.**
- **For Australia models, after locking all the doors (including the rear gate) using the access key fob, pushing the unlock position of the power door locking switch has no effect.**

■ Automatic Door Locking/Unlocking

All doors and the fuel filler lid are automatically locked or unlocked under the following conditions.

- For automatic door locking
  - When the vehicle speed reaches 20 km/h (12 mph) or higher (factory default setting).
  - When the select lever is shifted into a position other than the “P” position.
- For automatic door unlocking
  - When the driver’s door is open (factory default setting).
  - When the ignition switch is turned to OFF.
  - When the select lever is shifted into the “P” position.

NOTE

- **The automatic door lock and unlock setting can be changed with the center information display. Refer to “Car settings” ☞P229.**
- **When locking the door by the power door locking switch, automatic door locking will not operate.**
- **When unlocking the door by the power door locking switch, automatic door unlocking will not operate.**
- **If the system detects a strong enough impact to deploy the airbags, all doors may be automatically unlocked. For further details, refer to “Automatic Door Locking/Unlocking Operation When Involved in an Accident” ☞P454.**
- **When getting out of the vehicle from a rear door, make sure to unlock all the doors by pushing the unlock side of the power door locking switch. If a rear door is unlocked from the inside door lever then the door is opened and closed, the Key lock-in prevention function will be triggered. All doors will be unlocked, the Key lock-in prevention warning indicator “ ” will appear and the warning chime will also sound.**

■ Key Lock-In Prevention Function (Models without Double Locking System)

All the doors will not lock when the power door locking switch is pushed with the driver’s door open while the ignition switch is in the “ACC” or “ON” position.

NOTE

- **When leaving the vehicle, make sure you are holding the key before locking the doors.**

- **When getting out of the vehicle from a rear door, make sure to unlock all the doors by pushing the unlock side of the power door locking switch. If a rear door is unlocked from the inside door lever then the door is opened and closed, the Key lock-in prevention function will be triggered. All doors will be unlocked, the Key lock-in prevention warning indicator "" will appear and the warning chime will also sound.**
- **The factory setting (default setting) for this function is set as "operational". This function's operational/non-operational setting can be changed by a SUBARU dealer. We recommend that you contact a SUBARU dealer for details.**

▼ **Non-operation of key lock-in prevention function**

When the system is set so that it does not operate, the doors are locked by the following operation.

- If the spare key is used to lock the driver's door from the outside of the vehicle, the door is locked.

■ Battery Drainage Reduction Function

Under various conditions, lights inside the vehicle will automatically turn off to reduce the risk of discharging the battery.

▼ **Battery drainage reduction function for various conditions**

This function will enter standby mode when the ignition switch is turned to the "OFF" position.

If the following actions are not performed within 10 minutes, while the function is in standby mode, any room lights that are on will automatically turn off.

Turning off lights	– Map light – Dome light – Cargo area light – Vanity mirror light – Door step lights – Rear gate light (if equipped)
Actions	– Turn the ignition switch to the "ACC" or "ON" position. – Open or close the doors, including the rear gate. – Push the unlock button on the access key fob. – Hold the front door handle and unlock it while holding the access key fob. – Come close to the vehicle that the front door was locked while holding the access key fob (if OFF delay timer setting for period of time is not off).

Perform the action in the above table to illuminate the lights again when the battery drainage reduction function is active.

NOTE

- **The battery drainage reduction function cannot be turned off.**
- **To protect the battery from battery drainage, make sure that all doors, including the rear gate, are completely closed when leaving the vehicle.**

2-5. Double Locking System (If Equipped)

The double locking system is an anti-theft system. It operates when the doors are locked using the key or access key fob. While this system is operating, the power door locking switch and door lock levers inside the cabin cannot be used to unlock the doors.

WARNING

Never set the double locking system while passengers are inside the vehicle. With the system set, people in the vehicle would not be able to open the doors from the inside. The result could be serious injuries or death.

■ To Set Double Locking System

▼ Setting system using key

1. Turn the push-button ignition switch to the “OFF” position and have all occupants get out of the vehicle.
2. Close all the doors (including the rear gate) securely.

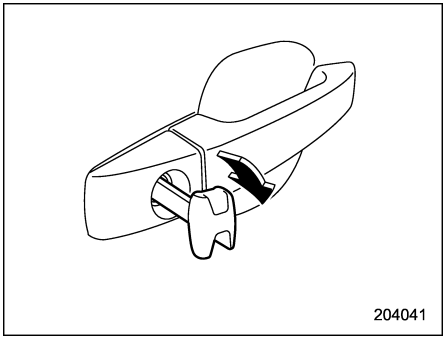

3. Insert the key into the key cylinder of the driver’s door, then turn it in the locking direction to set the double locking system. All the doors (including the rear gate and the fuel filler lid) will be locked.

▼ Setting system using an access key fob

1. Turn the push-button ignition switch to the “OFF” position and have all occupants get out of the vehicle.
2. Close all the doors (including the rear gate) securely.
3. Press the “🔒” button on the access key fob. The hazard warning flashers will flash once and the double locking system will be set. All the doors (including the rear gate and the fuel filler lid) will be locked.

NOTE

It is possible to set the double locking system by touching the door lock sensor.

■ To Cancel Double Locking System

▼ Canceling system using a key

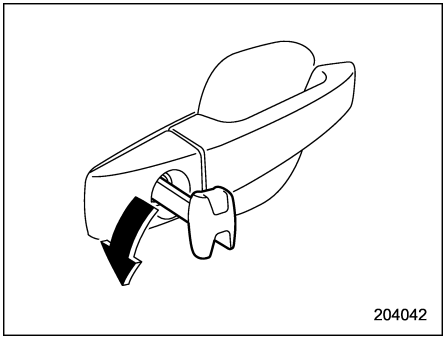

Insert the key into the key cylinder of the driver’s door, then turn it in the unlocking direction to cancel the double locking system. All the doors (including the rear gate and the fuel filler lid) will be unlocked.

▼ **Canceling system using an access key fob**

Press the "🔓" button on the access key fob. The hazard warning flashers will flash twice and the double locking system will be canceled. The driver's door and the fuel filler lid will be unlocked.

NOTE

It is possible to cancel the double locking system by gripping the door handle.

■ In an Emergency

If you become trapped inside the vehicle owing to an accident or some other unexpected circumstance, unlock the doors using one of the following methods.

- Turn the push-button ignition switch off, then press the "🔓" button on the access key fob.
- Set the ignition switch to the "ON" position and open the driver's window. Insert the key into the key cylinder of the driver's door and turn it in the unlocking direction.
- Break one of the windows and climb out through the window opening.

■ If a Battery Goes Dead

If the double locking system cannot be canceled because the vehicle battery or access key fob battery has gone dead or because of a blown fuse or other electrical problem, insert the key into the key cylinder of the driver's door and turn it in the unlocking direction.

■ To Reset Double Locking System

The double locking system must be reset when the vehicle battery has been temporarily disconnected for replacement or charging. To reset the system, turn the key once in the unlocking direction or press the "🔓" button on the access key fob. The double locking system will then operate normally.

NOTE

It is possible to reset the double locking system by gripping the door handle.

2-6. Function Disabling Unlocking with the Power Door Locking Switch (Australia Models)

⚠ WARNING

Never lock the doors using the remote keyless entry system while passengers are inside the vehicle. Doing so activates the function that disables unlocking with the power door locking switch and so people in the vehicle would not be able to open the doors from the inside. This could result in serious injury or death.

Australia models are fitted with an anti-theft function that disables door unlocking with the power door locking switch. This function is activated in the following situations, disabling the doors from being unlocked using the power door locking switch.

- The doors are locked using the keyless access function. Refer to "Keyless Access with Push-Button Start System" ☞P128.
- The doors are locked using the remote keyless entry system. Refer to "Remote

– CONTINUED –

Keyless Entry System” ☞P143.

- The automatic locking function is in operation. Refer to “Automatic Locking (Models without Double Locking System)” ☞P144.

This function is canceled when the doors are unlocked using the remote keyless entry system and the keyless access function.

NOTE

- **Even while this function is activated, doors can be unlocked using their lock levers, refer to “Locking and Unlocking from the Inside” ☞P147.**
- **This function is not activated when the doors are locked using the key or power door locking switch.**

2-7. Child Safety Locks

WARNING

Always turn the child safety locks to the “LOCK” position when children sit on the rear seat. Serious injury could result if a child accidentally opens the door and falls out.

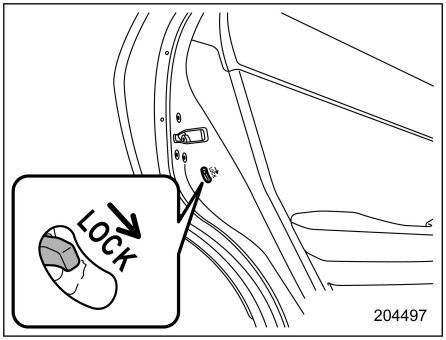

Each rear door has a child safety lock. When the child safety lock lever is in the “LOCK” position, the door cannot be opened from inside. The door can only be opened from the outside.

2-8. Windows

WARNING

To avoid serious personal injury caused by accidental, child’s mischief, or improper operation, the driver is responsible for obeying the following instructions without exception.

- **When operating the power windows, be extremely careful to prevent anyone’s fingers, arms, neck, head or other objects from being caught in the window.**
- **Always lock the passengers’ windows using the lock switch when children are riding in the vehicle.**
- **Always carry the key when you leave the vehicle for safety reasons and never allow an unattended child to remain in the vehicle. Failure to follow this procedure could result in injury to a child operating the power window.**

NOTE

- **It is possible to open and close the front windows from outside the**

vehicle by using the remote keyless entry system (except Australia models). Refer to "Opening/Closing All the Windows (except Australia Models)" ☞P145.

- **If the power window system detects resistance, an impact or abnormality, the window operation may be automatically stopped to prevent further jamming, entrapment or malfunction.**
  - **The closing window slides down slightly and stops.**
  - **The opening window stops sliding down.**
- **The power window system may detect resistance, an impact or an abnormality in the following cases.**
  - **A substantial sized object is caught between the window and the window frame.**
  - **A foreign object is caught between the window and the window frame.**
  - **The vehicle drives over a deep pothole.**
- **The window cannot be closed for a few seconds after the window is automatically stopped by the system.**

■ Power Window Operation

▼ Power window switches

- Driver's side power window switches:

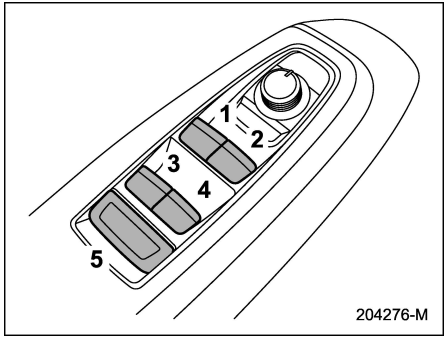

1 For front left window*
2 For front right window*
3 For rear left window
4 For rear right window
5 Lock switch
*: With one-touch auto up and down feature

All door windows can be controlled by the power window switch cluster on the driver side door.

The switch illuminates when operated.

- Passenger's side power window switches:

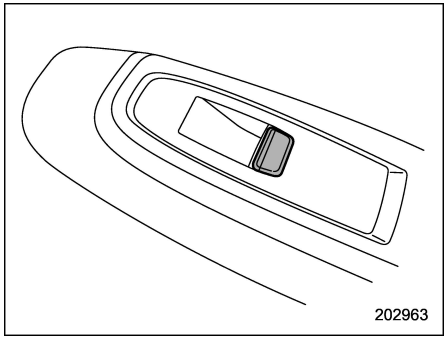

Each passenger's window can be controlled by the power window switch located on the door.

The switch illuminates when operated.

– CONTINUED –

▼ Operating the window

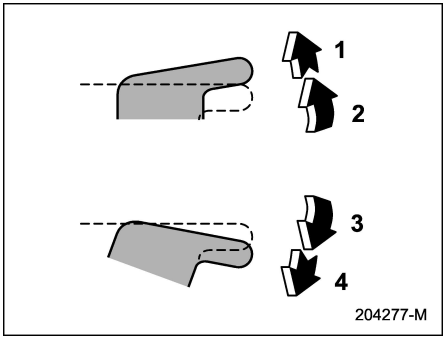

With one-touch auto up and down feature

1 Automatically close*
2 Close
3 Open
4 Automatically open*

*: To stop the window halfway, operate the switch to the opposite side.

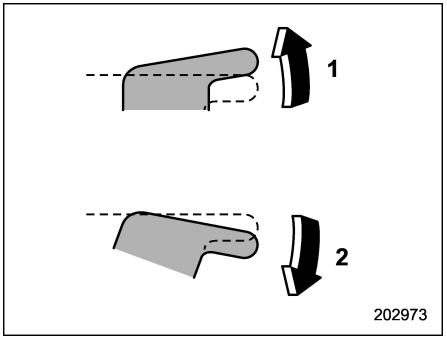

Without one-touch auto up and down feature:

1 Close
2 Open

NOTE

Avoid the following.

- **Continuously operating a switch in the same direction after the window is fully closed or fully opened.**
- **Continuously operating three or more switches all at once in the same direction after the windows are fully closed or fully opened.**

Either of the operations described above may cause the power window breaker to operate making it impossible to open or close the window. Be sure to initialize the power windows. Refer to "Initialization of Power Window" ☞P155.

▼ Anti-entrapment function (windows with one-touch auto up/down function)

While closing the window automatically, if the window senses a substantial enough object trapped between the window and the window frame, it automatically moves down slightly and stops.

If a foreign object is caught while window is opening automatically, the window will stop.

⚠ CAUTION

- **Never attempt to test the power window operation using body parts fingers, hands or other parts of your body.**
- **If an object is caught just before the window fully closes, the system may not operate properly.**

NOTE

- **If a window detects an impact similar to that caused by trapping an object (for example, when the vehicle encounters a deep pothole), the anti-entrapment function may operate.**

- **You cannot close the window for a few seconds after the anti-entrapment function operates.**

▼ **Off delay function (windows with one-touch auto up/down function)**

The windows can be operated for approximately 40 seconds even after the ignition switch is turned to the “ACC” or “OFF” position. If a front door is opened within 40 seconds, the off delay function is canceled.

▼ **Locking the passengers’ windows**

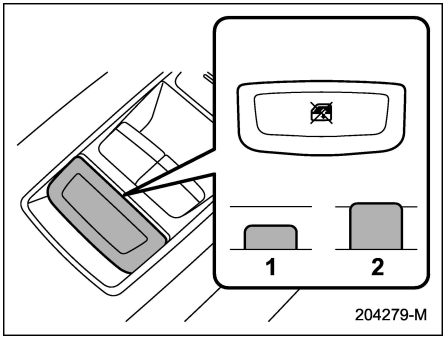

1 Lock
2 Unlock

When the lock switch is in the lock position, the rear passenger’s window switches on the driver side door and the passengers’ window switches cannot be operated.

When the indicator on the window switches does not illuminate, the window switch cannot be operated.

■ Initialization of Power Window

If the one-touch auto up and down function or off delay function does not operate properly, operate each window according to the following procedure in order to initialize the power window system.

1. Close the door.
2. Turn the ignition switch to the “ON” position.
3. Open the window completely and then press and hold down the power window switch for approximately 1 second.
4. Close the window completely and then pull and hold the power window switch for approximately 1 second.

2-9. Rear Gate

⚠ CAUTION

When loading and unloading cargo, be careful not to come in contact with the hot engine exhaust gas or the exhaust pipe, because they could burn you.

The rear gate can be locked and unlocked using any of the following systems.

- Power door locking switch: Refer to “Locking and Unlocking from the Inside” ☞P147.
- Keyless access with the push-button start system: Refer to “Keyless Access with Push-Button Start System” ☞P128.
- Remote keyless entry system: Refer to “Remote Keyless Entry System” ☞P143.
- Locking and unlocking from the outside with the emergency key (models with double locking system): Refer to “Locking and Unlocking from the Outside” ☞P146.

– CONTINUED –

Opening the rear gate:

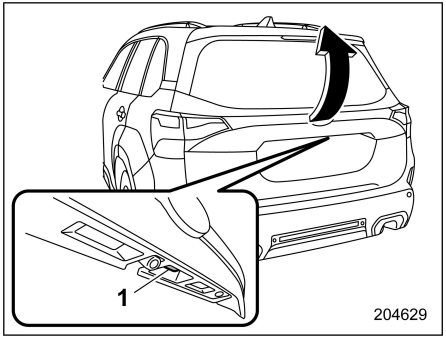

1 Rear gate opener button

1. Open the rear gate using the appropriate method.

When the rear gate is locked	Press and hold the rear gate opener button while carrying the access key.
When the rear gate is unlocked	Press and hold the rear gate opener button.

2. Hold the rear gate and lift it up slowly.

NOTE

- **If the rear gate cannot be opened due to a discharged 12 V battery, a malfunction in the door locking/unlocking system or other causes, you can unlock it by manually operating the rear gate lock release lever. For the procedure, refer to "Rear Gate – If the Rear Gate Cannot Be Opened" ☞P450.**
- **Avoid keeping the rear gate open for more than a few hours. Doing so may drain the 12 V battery.**

Closing the rear gate:

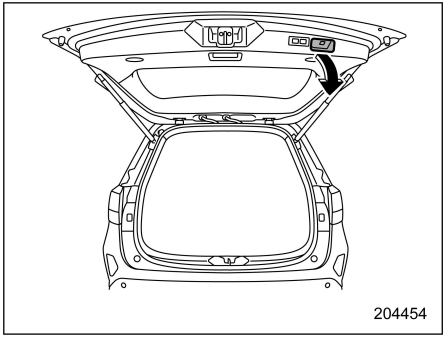

Lower the rear gate slowly and push down firmly until the latch engages.

The rear gate can be lowered easily if you pull down on the inside handle as shown in the illustration.

WARNING

- **To prevent dangerous exhaust gas from entering the vehicle, always keep the rear gate closed while the e-BOXER system is running.**
- **Do not attempt to shut the rear gate while holding the recessed grip. Also do not close the rear gate by pulling the grip from inside the cargo space. There is a danger of your hand being caught and injured.**

CAUTION

- **Do not jam a plastic bag in or place cellophane tape on the rear gate stays or scratch the stays while loading or unloading cargo. That could cause leakage of gas from the stays, which may result in their inability to hold the rear gate open.**
- **Be careful not to hit your head or face on the rear gate when opening or closing the rear gate and when loading or unloading cargo.**
- **Never attempt to close the rear gate by grabbing or pressing on the outer metal surface or damage may result.**

- **Always use the inside handle to avoid damaging the exterior surface of the gate.**

■ Power Rear Gate (If Equipped)

⚠ WARNING

- **When operating the power rear gate, observe the following precautions. Ignoring the precautions may result in an injury (e. g., anyone's body is hit against the rear gate or is caught in the rear gate, etc.)**
  - **Make sure there are no people around the rear gate.**
  - **Never let anyone get close to the rear gate.**
- **When closing the rear gate, be extremely careful to prevent anyone's fingers, arms, neck, head or other objects from being caught in the rear gate. Otherwise, serious personal injury may be caused by entrapment.**
- **After opening the rear gate on a slope by using the power rear gate feature, the rear gate may close. Make sure that the rear gate has stopped completely after opening it.**
- **When leaving the vehicle, always carry the key for safety and never allow an unattended child to remain in the vehicle. Failure to follow this procedure could result in injury to a child operating the power rear gate.**
- **The driver should be aware of and pay careful attention to his/her responsibilities.**
- **Use the power rear gate only when the area around the rear gate is clearly visible and when you have checked that there is no danger of people being caught in the gate.**

⚠ CAUTION

- **When closing the rear gate after opening it, make sure to use the power rear gate. If you close the rear gate manually with extra force, the power rear gate may be damaged.**
- **Do not install any accessories other than genuine SUBARU parts on the rear gate. If the weight of rear gate increases excessively, the rear gate stay cannot support the rear gate sufficiently when opening the rear gate. Also, the power rear gate may not function properly or may malfunction.**

The power rear gate operates only when all of the following conditions are satisfied.

- The vehicle is stopped completely.
- The outside temperature is within a range from −30°C to 60°C (−22°F to 140°F).
- The ignition switch is in the "OFF" or "ACC" position. Or, the ignition switch is in the "ON" position and the select lever is in the "P" position.

We recommend using the power rear gate function in most circumstances instead of manual operation.

NOTE

- **The rear gate may not move smoothly when the battery power becomes low.**
- **Do not press the power rear gate button repeatedly while the power rear gate is operating. Otherwise, the system may ignore the button operation in order to avoid being**

– CONTINUED –

damaged.

- If the vehicle starts to move while the power rear gate is operating, the system sounds a buzzer and closes the rear gate automatically. At this time, if the system detects jamming, it will deactivate the power rear gate and the rear gate will not be closed. If this occurs, close the rear gate manually. For details, refer to "Rear Gate" ☞P155.
- If you try to open the rear gate using the power rear gate function immediately after closing the rear gate using the power rear gate function, an electronic chirp will sound and the rear gate will not open. Wait for a while before trying to open the rear gate via the power rear gate function.
- If either of the operating conditions has not been satisfied while operating the power rear gate, an electronic chirp will sound and the power rear gate will be deactivated. In this case, the rear gate may stop opening or closing suddenly.

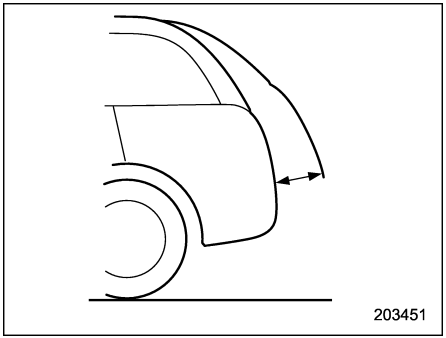

- The rear gate cannot be paused when it is in the approximately 5 cm (2 in) range from the fully closed position. The system will ignore any button operation and the rear gate will continue to open.
- The rear gate will remain unlocked even after closing it. Always lock the rear gate when leaving the vehicle.
- If you cannot open/close the rear gate by performing the operation described here, a short electronic chirp will sound three times (beep, beep, beep). In this case, perform the initialization of the power rear gate. Refer to "Initialization of power rear gate" ☞P165.

▼ **Operating by the rear gate button (other than the buttons on the rear gate)**

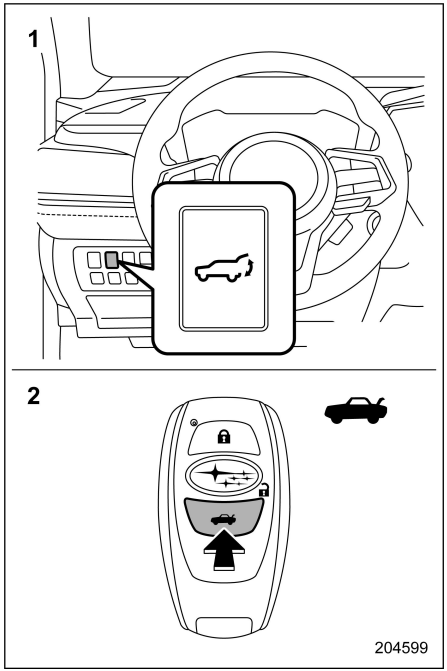

1 Power rear gate button on the instrument panel
2 Power rear gate button on the access key fob

Opening the rear gate:

Press and hold the power rear gate button when the rear gate is closed. The rear gate will open automatically. Then the hazard warning flashers will operate as follows:

- When operating the power rear gate button on the instrument panel: flashes twice.
- When operating the power rear gate button on the access key fob: flashes four times.

NOTE

- **If the rear gate cannot be opened by operating the power rear gate button on the instrument panel, unlock it with the keyless access function or the remote keyless entry system. Then, it will be possible to open the power rear gate using the power rear gate button on the instrument panel.**
- **The factory setting (default setting) of the operation for the "" button on the access key fob is press and hold. This setting can be changed to OFF or press twice at SUBARU dealers. For more details, we recommend that you contact a SUBARU dealer.**

Pausing the rear gate while it is opening:

Briefly press the power rear gate button while the rear gate is being opened.

NOTE

If you press the power rear gate button again, the rear gate will close.

Closing the rear gate:

Press and hold the power rear gate button. Then the hazard warning flashers will flash twice.

NOTE

If you briefly press the power rear gate button again, the rear gate will open.

▼ **Operating by the buttons on the rear gate**

NOTE

After performing the following procedures, the hazard warning flashers will flash twice.

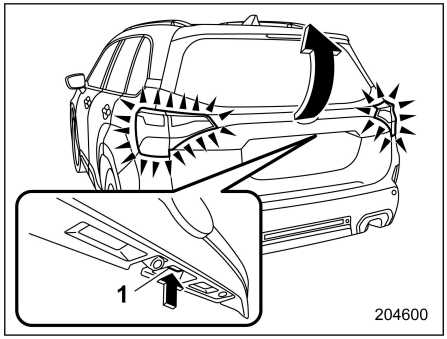

1 Rear gate opener button

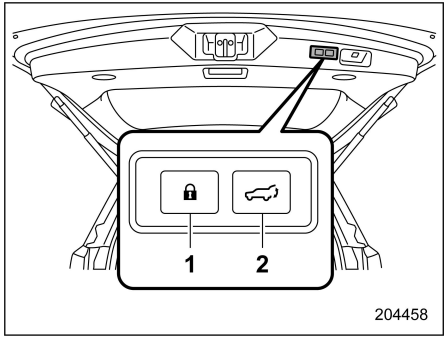

Power rear gate button on the inside edge of the rear gate

1 Power rear gate lock button
2 Power rear gate button

– CONTINUED –

Opening the rear gate:

When the rear gate is locked	Briefly press the rear gate opener button while carrying the access key.
When the rear gate is unlocked	Briefly press the rear gate opener button.

After you operate the rear gate, the hazard warning flashers will flash twice.
The rear gate will open automatically.

Pausing the rear gate while it is opening:
Briefly press either of the following buttons while the rear gate is being opened.

- Rear gate opener button
- Power rear gate button on the inside edge of the rear gate

NOTE

If you press the power rear gate button again, the rear gate will close.

Closing the rear gate:
Briefly press either of the following buttons.

- Rear gate opener button
- Power rear gate button on the inside edge of the rear gate

NOTE

If you press the power rear gate button again, the rear gate will open.

Locking the doors using the power rear gate lock button:
Carry the access key fob, and press the power rear gate lock button. All doors, the rear gate and the fuel filler lid are locked, and the rear gate will be closed. Also, the hazard warning flashers will flash once.

NOTE

- **When you push the power rear gate lock button for more than 2 seconds, all the doors will lock, but the auto closing function of the rear gate will be canceled.**
- **If you push the power rear gate lock button while the access key is inside the vehicle, an electronic chirp sounds and the rear gate does not operate.**
- **When the ignition switch is placed in the “ON” or “ACC” position, the rear gate does not operate when you push the power rear gate lock button.**
- **If any of the doors is not fully closed, the electronic chirp sounds five times to alert you that the doors are not properly closed.**

▼ Manual operation

Opening the rear gate:
Lift up the rear gate, when the rear gate is at the midway position. The rear gate will open automatically.

Closing the rear gate:
Pull down the rear gate when the rear gate is opened. The rear gate will close automatically.

NOTE

- **If the rear gate is moved slowly, it may not operate automatically open or close.**
- **When leaving the vehicle, make sure that all doors and the rear gate are completely locked.**

▼ Hands-Free Power Rear Gate

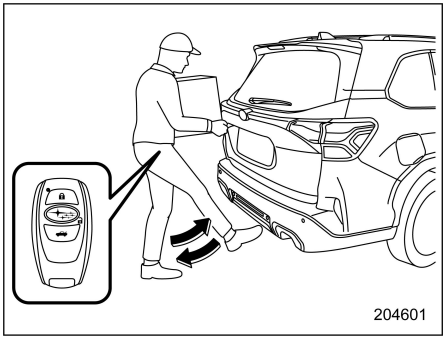

You can operate the rear gate by making a kicking motion below the center of the rear bumper.

The Hands-Free Power Rear Gate can be switched to active or inactive. For details, refer to “Hands-Free Power Rear Gate off switch” ☞P162.

⚠ CAUTION

- **Do not kick the bumper. Doing so may cause a malfunction.**
- **Be careful not to touch the exhaust pipe when making a kicking motion. There is a risk of burns.**
- **When opening and closing the rear gate, check that there is a safe amount of space behind the vehicle. There is a risk of injury such as being caught between the rear gate and the wall.**
- **Be careful when making a kicking motion while standing on a surface where you footing is not stable. You could lose your balance and fall.**
- **Be careful of the Hands-Free Power Rear Gate if an access key fob is placed near the vehicle. If a person or physical object comes in close proximity to the rear bumper, the Hands-Free Power Rear Gate may open suddenly resulting in damage to the rear gate or personal injury. This can occur even if the person who approaches the rear bumper is not carrying the access key fob.**

▽ Operating range

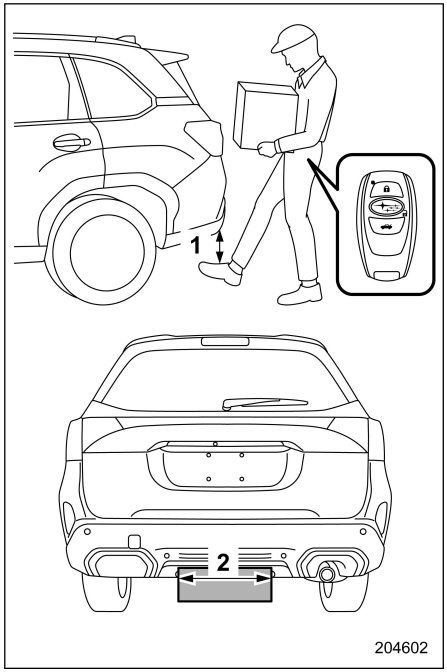

1 Approx. 10 cm (4 in)
2 Kicking motion detection area

Make sure that you perform the kicking motion within the operation range shown in the figure.

– CONTINUED –

▽ **Hands-Free Power Rear Gate off switch**

If you do not want to use the function, press the Hands-Free Power Rear Gate off switch.

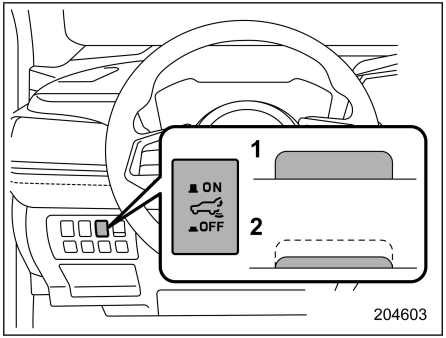

1 Function is active
2 Function is inactive

When the Hands-Free Power Rear Gate off switch is pressed in, the Hands-Free Power Rear Gate function will be deactivated.

▽ **How to use the function**

1. Check if the Hands-Free Power Rear Gate off switch is set to active.
2. Make sure there is enough space behind the vehicle and carry the access key fob with you.
3. Move your foot into and then out of the kicking motion detection area within 1 second, and then take a step back to avoid hitting the rear gate.

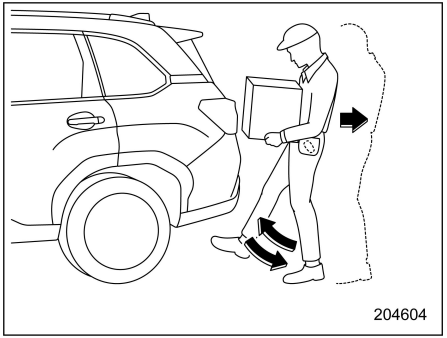

The hazard warning flashers will flash twice, and the rear gate will operate.

NOTE

- **If you move your foot into the operation range while the rear gate is in opening, the rear gate will stop.**
- **If you perform a kicking motion while the rear gate is in closing, the rear gate will start opening.**
- **When the rear gate is opening or closing, you can use a kicking motion to stop or reverse the operation of the rear gate, even if you are not carrying the access key fob.**
- **In some situations, the Hands-Free Power Rear Gate function may activate accidentally. To prevent this from happening, turn off the function in the following cases.**
  - **When the area around the rear bumper is equipped with outdoor equipment, etc.**
  - **When washing the vehicle**
  - **When removing snow**
  - **When a small animal or an object, such as a ball, crosses the kicking motion detection area**
- **The Hands-Free Power Rear Gate function may not operate properly in the following conditions.**
  - **When you hold your foot under the bumper.**
  - **When the standing position of a kicking motion is too close to the rear bumper.**
  - **When your foot comes in direct contact with the bumper while executing a kicking motion.**
  - **When executing a kicking motion repeatedly.**
  - **When you slide your foot sideways after executing a kicking motion.**
  - **In heavy rain**
  - **The rear bumper is very dirty.**

- **The vehicle is covering by snow.**
- **The system of the vehicle cannot detect the access key fob.**
- **When you are affected by the environment around the vehicle.**
- **When operating the function in a location with strong radio waves or noise (e.g., near a radio tower, power plant or broadcast station), or while talking on a cell phone**
- **When stickers, painting, etc. are applied to the rear bumper.**

In such cases, wait a few moments, and then operate the Hands-Free Power Rear Gate function again as instructed in this Owner's Manual. Alternatively, push the rear gate opener button or the power rear gate button to operate the function.

- **When you close the rear gate by using a kicking motion, it will take a few seconds until the rear gate starts closing. Back away from the rear gate to avoid getting struck by it as it closes. To have the interval before the rear gate starts closing adjusted, we recommend that you promptly visit a SUBARU dealer. For details, refer to "Function Settings and Adjustments Performed by a Dealer" ☞P531.**
- **If you visit your SUBARU dealer to have the automatic lock function set to ON, this setting change will allow you to close the rear gate and lock the vehicle by using a kicking motion. For details, refer to "Function Settings and Adjustments Performed by a Dealer" ☞P531.**
- **When a trailer hitch is attached to the vehicle, the Hands-Free Power Rear Gate function is not available.**

▼ Memory function

The preferred rear gate height can be registered.

▽ Registration of the rear gate height

1. Open the rear gate and stop it at the preferable height.

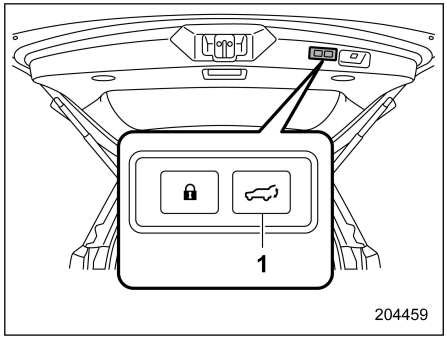

1 Power rear gate button

2. Press and hold the power rear gate button to register the height.

An electronic chirp sounds for confirmation.

The rear gate will stop at the registered position when the memory function is on.

NOTE

- **Register the rear gate height to turn on the "Power Rear Gate Memory" automatically. For details, refer to "Car settings" ☞P229.**
- **To change the registered height, perform the registering procedure again.**
- **It is possible to register the height from approximately 5 cm (2 in) or**

– CONTINUED –

more from the completely closed position.

▽ **Deactivation of the memory function**

Deactivate the memory function to open the rear gate fully. Perform either of the following operation to deactivate the memory function.

– Deactivate the “Power Rear Gate Memory” function on the center information display (CID). Refer to “Car settings” ☞P229.
– Register the position of the rear gate at the fully open position.

▽ **Utilizing the memorized rear gate height**

To open the rear gate and stop it at the registered height, perform the following procedure.

1. Check that “Power Rear Gate Memory” is on. Refer to “Car settings” ☞P229.
2. Press and hold any of the power rear gate button.

NOTE

The rear gate will open to the position that is stored in the memory function even if the rear gate is opened by the reverse function.

▼ **Reverse function**

⚠ WARNING

- **Do not let parts of your body get caught when operating the reverse function. If the reverse function does not operate for some reason, this may lead to serious injury or accidents.**
- **The reverse function may not operate if foreign objects are caught in the rear gate just before it closes completely. Be careful not to catch your fingers and other body parts.**
- **The reverse function may not operate depending on the object shape and the manner in which it was caught. Be careful not to catch your fingers and other body parts.**

⚠ CAUTION

- **If the reverse function is operated 3 times consecutively, automatic opening and closing of the power rear gate function will be canceled and the rear gate will stop opening or closing suddenly. However, the rear gate may open or close depending on the rear gate height when automatic operation is ceased. Be careful that the rear gate does not hit anyone’s head or face, etc. and that fingers and baggage, etc. are not caught in it.**
- **Take care not to damage the touch sensors. Otherwise, the reverse function may cease to operate.**

If, while opening or closing using power rear gate, the rear gate catches persons or baggage or hits an obstacle, an electronic chirp will sound 3 times and the rear gate will operate as follows.

When opening the rear gate: The rear gate will automatically close.

When closing the rear gate: The rear gate will automatically open.

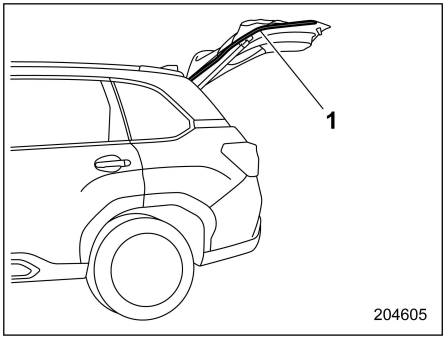

1 Touch sensor

Touch sensors are attached on the left and right edges of the rear gate. If the touch sensors detect fingers, baggage, etc. while closing by the power rear gate function, an electronic chirp will sound 3 times and the rear gate will open automatically.

NOTE

When the rear gate is opened using the reverse function, it will be opened fully or to the height registered in the memory function.

▼ Rear gate drop prevention function

If, while fully opened via the power rear gate function, the rear gate is lowered by the weight of snow and such, an electronic chirp will sound and the rear gate drop prevention function will apply braking to the rear gate so that it prevents a rapid closure of the rear gate.

NOTE

- **If there is snow on the rear gate, only use the power rear gate function after removing the snow.**
- **If you close the rear gate manually just after the rear gate is fully opened using the power rear gate function, the rear gate drop prevention function will detect a rapid closure of the rear gate and apply braking to the rear gate. In this case, this is not a malfunction.**

▼ Initialization of power rear gate

If the power rear gate detects some abnormality while operating, an electronic chirp will sound and the power rear gate operation will be automatically stopped in either opening or closing position. In this case, the system needs to be initialized in the following order to restart the function properly.

▽ If the power rear gate is closed

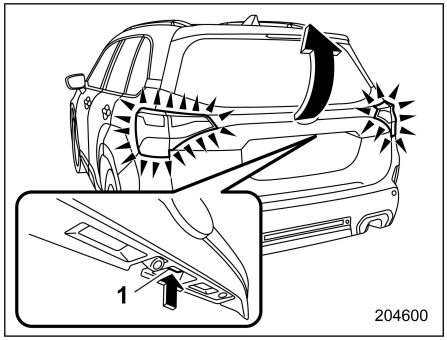

1 Rear gate opener button

1. Keep pressing the rear gate opener button until it is unlocked (for approximately 5 seconds).
2. Lift up the rear gate.
3. Pull down the rear gate until it starts to close automatically. The system will be initialized once the gate is fully closed.
4. Operate the power rear gate and check that the function operates properly.

▽ If the power rear gate is opened

1. Pull down the rear gate until it starts to close automatically. The system will be initialized once the gate is fully closed. If the rear gate will not close completely, keep pressing the rear gate open-

– CONTINUED –

er button for approximately 5 seconds and pull down the rear gate.

2. Operate the power rear gate and check that the function operates properly.

CAUTION

If the power rear gate function does not operate properly, we recommend that you have your vehicle checked by a SUBARU dealer.

2-10. Sunroof (If Equipped)

WARNING

Never let anyone's hands, arms, head or any objects protrude from the sunroof. A person could be seriously injured if any of the following conditions occur.

- **The vehicle stops suddenly.**
- **The vehicle turns sharply.**
- **The vehicle is involved in an accident.**
- **Body parts protruding from the vehicle are struck by outside objects.**

To avoid serious personal injury caused by accidental, child's mischief, or improper operation, the driver is responsible for obeying the following instructions without exception.

- **Before closing the sunroof, make sure that no one's hands, arms, head or other objects will be accidentally caught in the sunroof.**
- **Always carry the key when you leave the vehicle for safety reasons and never allow an unattended child to remain in the vehicle. Failure to follow this procedure could result in injury to a child operating the sunroof.**
- **Never try to check the anti-entrapment function by deliberately placing part of your body in the sunroof.**

CAUTION

- **Do not sit on the edge of the open sunroof.**
- **Do not operate the sunroof if falling snow or extremely cold conditions have caused it to freeze shut.**
- **If the sunroof does not close, we recommend that you have the system checked by a SUBARU dealer.**

■ Sunroof Switches

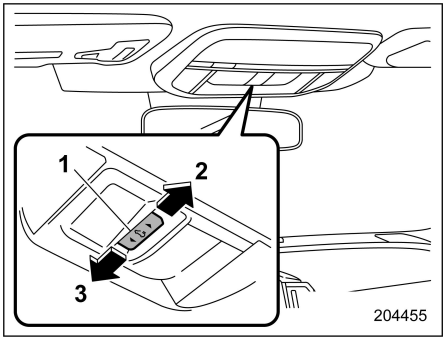

1 Sunroof switch
2 Open
3 Close

The switch is operable when the ignition switch is in the “ON” position.

■ Sliding Sunroof

To open the sunroof:

When the sunroof switch is slid and held backward, the sunroof will open, then stop slightly before the fully open position to reduce wind noise.

Slide the sunroof switch again to fully open the sunroof.

To close the sunroof:

When the sunroof switch is slid and held to the close side, the sunroof will fully close.

To stop the sunroof halfway, slide the sunroof switch either way.

NOTE

- **After washing the vehicle or after it rains, wipe away water on the roof prior to opening the sunroof to prevent drops of water from falling into the passenger compartment.**
- **Driving with the sunroof fully open can cause an annoying sound to be generated at high speeds. If this occurs, use the sunroof at the initial stop position of 15 cm (6 in) away from the fully opened position.**
- **For the sake of safety, it is recommended that you avoid driving with the sunroof fully opened.**

▼ Anti-entrapment function

When the sunroof senses a substantial enough object trapped between its glass and the vehicle’s roof during closure, it automatically moves back slightly and stops. The anti-entrapment function may also be activated by a strong shock on the sunroof even when there is nothing trapped.

⚠ CAUTION

Never attempt to test this function using fingers, hands or other parts of your body.

■ Sunshade

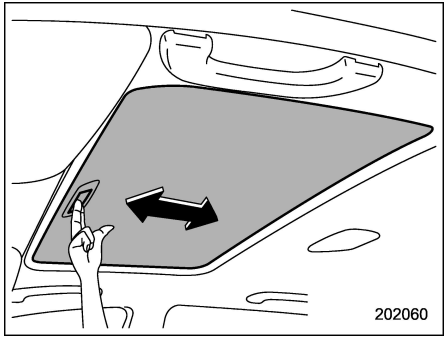

The sunshade can be slid forward or backward by hand while the sunroof is closed.

If the sunroof is opened, the sunshade also moves back.

3-1. Push-Button Ignition Switch 172
Safety Precautions 172
Operating Range for Push-Button Start System ... 172
Switching Power Status 172
When Access Key Fob Does Not Operate Properly 174
3-2. Hazard Warning Flasher 174
3-3. Meters and Gauges 175
Speedometer 175
Power Meter 175
Odometer 176
Double Trip Meter 176
Fuel Gauge 177
Engine Coolant Temperature Gauge 177
Combination Meter Settings 178
3-4. Illumination Brightness Control 178
Auto Dimmer Cancel Function 179
3-5. Warning and Indicator Lights 179
Seatbelt Warning Light and Chime 180
Rear Seatbelt Warning Light and Chime 182
SRS Airbag System Warning Light 183
Front Passenger's Frontal Airbag ON and OFF Indicator Lights (If Equipped) 183
Malfunction Indicator Light (Check Engine Light) 184
Charge Warning Light 184
Oil Pressure Warning Light 185
Engine Low Oil Level Warning Light 185
Low Tire Pressure Warning Light (If Equipped) 185
ABS Warning Light 187
Brake System Warning Light (Red) 188
Electronic Parking Brake Warning Light/Brake System Warning Light (Yellow) 189
Electronic Parking Brake Indicator Light 189
Auto Vehicle Hold Indicator Light 190
Low Fuel Warning Light 191
Door Open Indicator Light 191
Engine Hood Open Warning Light 191
Windshield Washer Fluid Warning Light 191
All-Wheel Drive Warning Light 191
Power Steering Warning Light 191
Vehicle Dynamics Control Warning Light/Vehicle Dynamics Control Operation Indicator Light 192
Vehicle Dynamics Control OFF Indicator Light 193
Warning Chimes and Warning Indicator of the Keyless Access with Push-Button Start System 193
Immobilizer Indicator Light 198
SI-DRIVE Indicator 198
Select Lever/Gear Position Indicator 198
Turn Signal Indicator Lights 199
High Beam Indicator Light 199
High Beam Assist Indicator (If Equipped) 199
Automatic Headlight Beam Leveler Warning Light 199
LED Headlight Warning Light 199
Steering Responsive Headlight OFF Indicator Light 199
Steering Responsive Headlight Warning Light 199
Adaptive Driving Beam Warning Light (Yellow) (If Equipped)/Adaptive Driving Beam Indicator Light (Green) (If Equipped) 199

Headlight Indicator Light.....199
Front Fog Light Indicator Light 200
Rear Fog Light Indicator Light (If Equipped).....200
X-MODE Indicator 200
Hill Descent Control Indicator Light 200
Subaru Rear Vehicle Detection Warning Indicator (If Equipped) 200
Subaru Rear Vehicle Detection OFF Indicator (If Equipped).....200
Vehicle Detected in Adjacent Lane Indicator (Models with 12.3-Inch Meter Display) (If Equipped).....200
Icy Road Surface Warning Light.....201
RAB Warning Indicator (If Equipped).....201
RAB OFF Indicator (If Equipped).....201
Driver Monitoring System Operation Indicator Light (Green) (If Equipped).....201
Driver Monitoring System Warning Light (Yellow) (If Equipped).....201
Driver Monitoring System OFF Indicator Light (If Equipped).....201
Driver Monitoring System Temporary Stop Indicator Light (If Equipped).....201
Sonar Audible Alarm OFF Indicator (If Equipped).....202
Front Cross Traffic Braking Warning Indicator (If Equipped).....202
Front Cross Traffic Braking OFF Indicator (If Equipped).....202
e-BOXER System Fail Lamp.....202
e-BOXER System Overheat Warning Light.....202
Pedestrian Alert System Warning Indicator Light 202
e-BOXER System READY Indicator Light 202
EV (Electric Vehicle) Indicator 203
EV (Electric Vehicle) Drive Mode Indicator 203
3-6. Combination Meter Display 203
4.2-Inch Meter Display Models 203
12.3-Inch Meter Display Models 205
Basic Operation 207
Welcome Screen (Opening Animation) and Good-Bye (Ending Animation) Screen.....207
Warning Screen.....208
Meter Information Screen 208
Telltale Screen 209
Basic Screens.....211
Digital Speed Screen.....214
3-7. Center Information Display (CID) 214
Features 214
Welcome Screen 215
Good-Bye Screen 215
Interruption Screen 215
Touch Screen Operations 216
11.6-Inch Display.....217
3-8. Clock 241
Setting the Clock Manually.....241
Setting the Clock Automatically.....241
Time Zone (Models with Navigation System).....242
Daylight Saving Time (Models with Navigation System) 242
3-9. PIN Code Lock.....242
Activation of PIN Code Lock.....242
Deactivation of PIN Code Lock 243

3-10. Light Control Switch 243
Headlights 244
High/Low Beam Change (Dimmer) 246
Headlight Flasher 246
High Beam Assist Function (If Equipped) 246
Daytime Running Light System 249
3-11. Steering Responsive Headlight (SRH) 249
3-12. Adaptive Driving Beam (ADB) (If Equipped) 251
How to Use the ADB Function 251
How to Change the Headlight Mode Manually 251
Automatic Switching Condition among the High Beam, Low Beam, and ADB 252
Tips for ADB 252
3-13. Cornering Lamps 253
3-14. Headlight Beam Leveler 254
3-15. Fog Light Switch 254
Front Fog Light Switch 254
Rear Fog Light Switch (If Equipped) 255
3-16. Turn Signal Lever 256
One-Touch Lane Changer 256
3-17. Wiper and Washer 256
Windshield Wiper and Washer Switches 259
Rear Window Wiper and Washer Switch 261
3-18. Headlight Washer 262
3-19. Defogger and Deicer 263
3-20. Mirrors 264
Inside Mirror (without Auto-Dimming Function) (If Equipped) 264
Auto-Dimming Mirror (If Equipped) 264
Outside Mirrors 265
3-21. Tilt/Telescopic Steering Wheel 268
3-22. Heated Steering Wheel System (If Equipped) 269
3-23. Horn 270

3-1. Push-Button Ignition Switch

■ Safety Precautions

Refer to “Safety Precautions” ☞P128.

■ Operating Range for Push-Button Start System

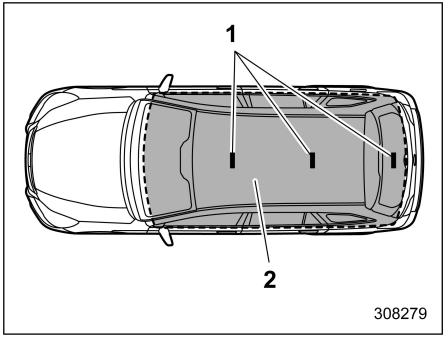

1 Antennas
2 Operating range

NOTE

- **If the access key fob is not detected within the operating range of the antennas inside the vehicle, the push-button ignition switch and the e-BOXER system start cannot be operated.**
- **Even when the access key fob is outside the vehicle, if it is placed too close to the glass, it may be possible to switch the power or to start the e-BOXER system.**
- **Do not leave the access key fob in the following places. It may become impossible to operate the push-button ignition switch and the e-BOXER system start.**
  - **On the instrument panel**
  - **On the floor**
  - **Inside the glove box**
  - **Inside the door trim pocket**
  - **On the rear seat**
  - **At the corner of the cargo area**
- **When operating the push-button ignition switch or starting the e-BOXER system, if the access key fob battery is discharged, perform the procedure described in “Access Key Fob – If Access Key Fob Does Not Operate Properly” ☞P449. In such a case, replace the battery immediately. Refer to “Replacing Battery of Access Key Fob” ☞P514.**

■ Switching Power Status

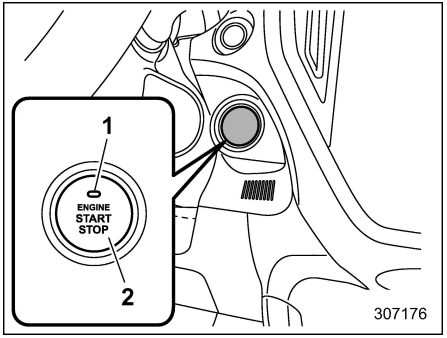

Left-hand drive models

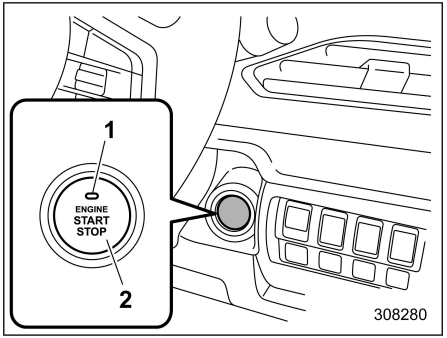

Right-hand drive models

1 Operation indicator
2 Push-button ignition switch

The power status is switched every time the push-button ignition switch is pressed.

1. Carry the access key fob, and sit in the driver's seat.
2. Make sure the select lever is in the "P" position.
3. Press the push-button ignition switch without depressing the brake pedal. Every time the button is pressed, the power is switched in the sequence of "OFF", "ACC", "ON" and "OFF". When the e-BOXER system is stopped and the push-button ignition switch is in "ACC" or "ON", the operation indicator on the push-button ignition switch illuminates in orange.

Power status	Indicator color	Operation
OFF	Turned off	Power is turned off.
ACC	Orange	The following systems can be used: audio and accessory power outlet.
ON	Orange (while e-BOXER system is stopped)	All electrical systems can be used.
	Turned off (while e-BOXER system is running)	

CAUTION

- **To prevent the 12 V battery from discharging, do not leave the push-button ignition switch in the "ON" or "ACC" position for a long time.**
- **To avoid a malfunction, observe the following precautions.**
  - **Do not spill drinks or other liquids on the push-button ignition switch.**
  - **Do not touch the push-button ignition switch with a hand that is soiled with oil or other contaminants.**
- **If the push-button ignition switch does not operate smoothly, stop the operation. We recommend that you contact a SUBARU dealer immediately.**
- **If the operation indicator on the push-button ignition switch does not illuminate even when the instrument panel illumination is turned on, have the vehicle inspected at a SUBARU dealer.**
- **If the vehicle was left in the hot sun for a long time, the surface of the push-button ignition switch may get hot. Be careful not to burn yourself.**

NOTE

- **When operating the push-button ignition switch, firmly press it all the way.**
- **If the push-button ignition switch is pressed quickly, the power may not turn on or off.**
- **If the indicator light on the push-button ignition switch flashes in green when the push-button ignition switch is pressed, steering is locked. When this occurs, press the push-button ignition switch while turning the steering wheel left and right.**

▼ Battery drainage reduction function

When the push-button ignition switch is left in the "ACC" position for approximately 20

– CONTINUED –

minutes or the “ON” position (the e-BOXER system is not running) for approximately 30 minutes, the push-button ignition switch will be automatically switched to “OFF” to reduce the possibility of the battery going dead. (This function is activated when the select lever is in the “P” position.)

■ When Access Key Fob Does Not Operate Properly

Refer to “Access Key Fob – If Access Key Fob Does Not Operate Properly” ☞P449.

3-2. Hazard Warning Flasher

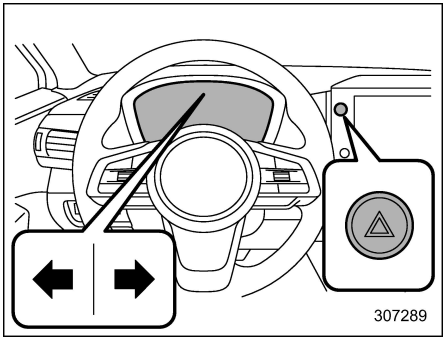

The hazard warning flasher is used to warn other drivers when you have to park your vehicle under emergency conditions. The hazard warning flasher works with the ignition switch in any position.

To turn on the hazard warning flasher, press the hazard warning flasher switch on the instrument panel. All the turn signal lights and the turn signal indicator lights will flash. To turn off the flasher, press the switch again.

NOTE

- **When the hazard warning flasher is on, the turn signals do not work.**
- **If you depress the brake pedal suddenly, the hazard warning flasher may blink rapidly. For details, refer to “Emergency Stop Signal” ☞P332.**

3-3. Meters and Gauges

NOTE

Liquid crystal displays are used in some of the meters and gauges in the combination meter. You will find their indications hard to see if you wear polarized glasses.

■ Speedometer

The speedometer shows the vehicle speed.

NOTE

The initial movement of the meter needles and gauge needles that occurs when the ignition switch is turned to the "ON" position can be activated or deactivated.

For details, refer to "General settings" ☞P225.

■ Power Meter

The indication of the power meter will change depending on the operation of the accelerator pedal. It shows the energy output conditions during driving and the regeneration energy status.

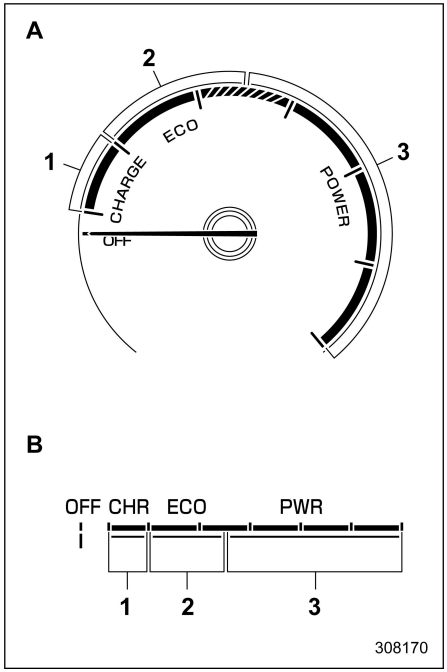

A 4.2-inch meter display
Normal mode (12.3-inch meter display)
B EyeSight mode/Map mode (12.3-inch meter display)
1 Charging area
2 Eco area
3 Power area

Charging area:

Displays the high voltage battery charging status when operating the regenerative braking system.

NOTE

When you are downshifting, your vehicle will slow down, but this will not necessarily increase the battery charge.

Eco area:

Displays the eco driving status.

Power area:

Indicates a state that exceeds the range of eco driving, such as when the vehicle is carrying a heavy load or being driven at high speed.

– CONTINUED –

■ Odometer

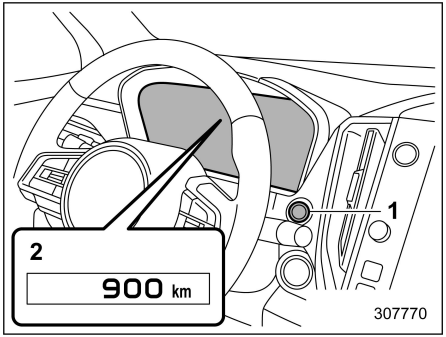

1 TRIP RESET switch
2 Odometer

This meter displays the odometer when the ignition switch is in the “ON” position.

The odometer shows the total distance that the vehicle has been driven.

NOTE

If you press the TRIP RESET switch when the ignition switch is in the “OFF” or “ACC” position, the odometer/trip meter will light up. The indicators will turn off when the TRIP RESET switch is not operated for approximately 10 seconds.

■ Double Trip Meter

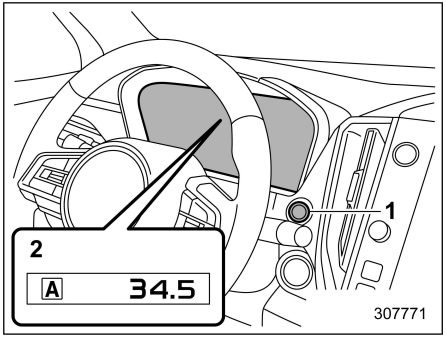

1 TRIP RESET switch
2 Trip meter

This meter displays the two trip meters when the ignition switch is in the “ON” position.

The trip meter shows the distance that the vehicle has been driven since you last set it to zero.

The display can be switched as shown in the following sequence by pressing the TRIP RESET switch.

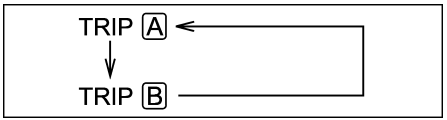

To reset the trip meter, select either the A trip or B trip meter, then press and hold the TRIP RESET switch.

⚠ CAUTION

To ensure safety, do not attempt to change the function of the indicator during driving, as an accident could result.

NOTE

- **If the connection between the combination meter and battery is broken for any reason such as vehicle maintenance or fuse replacement, the data recorded on the trip meter will be lost.**
- **It is possible to switch between the A trip meter and B trip meter indications while the odometer/trip meter is lit up. And, it is possible to reset the trip meter by pressing and holding the TRIP RESET switch.**
- **If you press the TRIP RESET switch when the ignition switch is in the “OFF” or “ACC” position, the odometer/trip meter will light up. The indicators will turn off when the TRIP RESET switch is not operated for approximately 10 seconds.**

■ Fuel Gauge

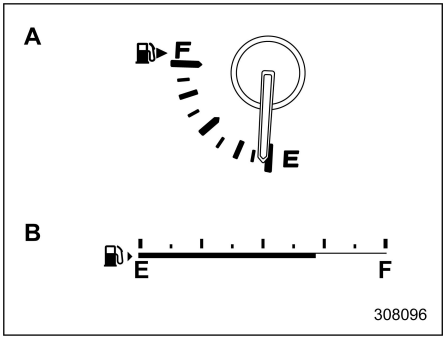

A 4.2-inch meter display models
B 12.3-inch meter display models

The fuel gauge shows the approximate amount of fuel remaining in the tank.

When the ignition switch is in the “OFF” or “ACC” position, the fuel gauge shows “E” even if the fuel tank contains fuel.

The needle may move slightly due to fuel level movement in the tank (e.g., during braking, turning or acceleration).

NOTE

- **You will see the “⛽▶” sign in the fuel gauge. This indicates that the fuel filler lid is located on the right side of the vehicle.**
- **If you press the TRIP RESET switch while the ignition switch is in the “OFF” or “ACC” position, the fuel gauge will light up and indicate the amount of fuel remaining in the tank. The gauge will turn off when the TRIP RESET switch is not operated for approximately 10 seconds.**

■ Engine Coolant Temperature Gauge

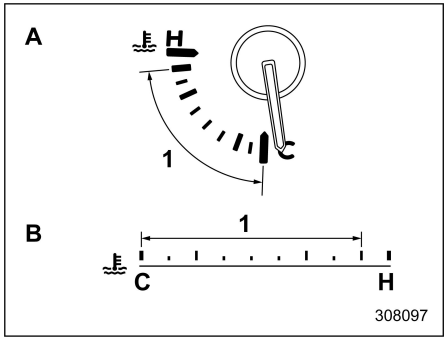

A 4.2-inch meter display models
B 12.3-inch meter display models
1 Normal operating range

The temperature gauge shows engine coolant temperature when the ignition switch is in the “ON” position.

The coolant temperature will vary in accordance with the outside temperature and driving conditions.

We recommend that you drive moderately until the pointer of the temperature gauge reaches near the middle of the range. Engine operation is optimum with the engine coolant at this temperature range and high revving operation when the engine is not warmed up enough should be avoided.

⚠ CAUTION

If the pointer exceeds the normal operating range, safely stop the vehicle as soon as possible.

Refer to “Engine Overheating” ☞P443.

NOTE

If you press the TRIP RESET switch while the ignition switch is in the “OFF” or “ACC” position, the engine coolant temperature gauge will light up and indicate the coolant temperature. The gauge will turn off when the TRIP RESET switch is not operated for approximately 10 seconds.

– CONTINUED –

■ Combination Meter Settings

Meter settings can be set on the center information display. For details, perform the procedures described in “General settings” ☞P225.

3-4. Illumination Brightness Control

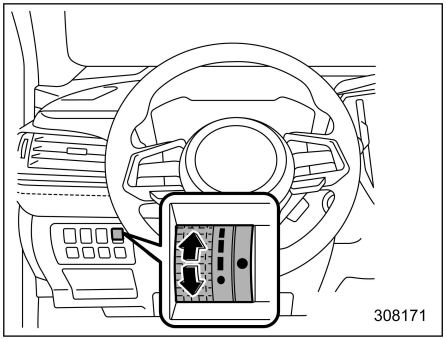

Left-hand drive models

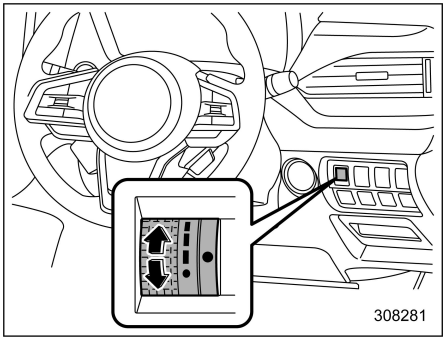

Right-hand drive models

The illumination brightness of the instrument panel dims under the following conditions.

- The light switch is in the “≡DOE” or “≡D” position when the ambient light is dark.
- The light switch is in the “AUTO” position and the headlights illuminate automatically.

You can adjust the illumination brightness for better visibility.

To brighten, turn the control dial upward.

To darken, turn the control dial downward.

NOTE

- **When the control dial is turned fully upward, the illumination brightness becomes the maximum and the automatic dimming function does not work at all.**
- **The brightness setting is not canceled even when the ignition switch is turned to the “OFF” position.**
- **The operation method of illumination brightness will differ depending whether or not “Brightness Dial” in the center information display is on. Refer to the operation method indicated the following table.**

“Brightness Dial” is on.

Operational item	Combination meter	Center information display
Control dial	Available	Available
“Brightness” on the center information display	Not available	Not available

“Brightness Dial” is off.

Operational item	Combination meter	Center information display
Control dial	Available	Not available
“Brightness” on the center information display	Not available	Available

For details about “Brightness Dial” on/off settings, refer to “General settings” ☞P225.

■ Auto Dimmer Cancel Function

When the ambient light is bright, the illumination brightness is set to the maximum regardless of the position of the control dial. In this case, you cannot adjust the illumination brightness by using the control dial. When the ambient light is dark, you can dim the illumination brightness as described above.

The operational/non-operational setting and sensitivity of the auto dimmer cancel function can be changed by your SUBARU dealer. We recommend that you contact your SUBARU dealer for details.

3-5. Warning and Indicator Lights

Several of the warning and indicator lights illuminate momentarily and then go out when the ignition switch is initially turned to the “ON” position. This permits checking the operation of the bulbs.

Apply the parking brake and turn the ignition switch to the “ON” position. For the system check, the following lights illuminate and turn off after several seconds or after the e-BOXER system has started:

: Seatbelt warning light (The seatbelt warning light turns off only when the driver fastens the seatbelt.)

: Front passenger’s seatbelt warning light (The seatbelt warning light turns off only when the front seat passenger fastens the seatbelt.)

: SRS airbag system warning light

: Rear seatbelt warning light

ON: Front passenger’s frontal airbag ON indicator light (if equipped)

OFF: Front passenger’s frontal airbag OFF indicator light (if equipped)

– CONTINUED –

: Malfunction indicator light (Check Engine light)

: Charge warning light

: Oil pressure warning light (4.2-inch meter display models)

(ABS): ABS warning light

: Vehicle Dynamics Control warning light/ Vehicle Dynamics Control operation indicator light

: Vehicle Dynamics Control OFF indicator light

(!): Brake system warning light (red)

(!): Electronic parking brake warning light/ Brake system warning light (yellow)

(P): Electronic parking brake indicator light

: Power steering warning light

(!): Low tire pressure warning light (if equipped)

: Low fuel warning light

If any lights fail to illuminate, it indicates a burned-out bulb or a malfunction of the corresponding system.

We recommend that you consult your authorized SUBARU dealer for repair.

■ Seatbelt Warning Light and Chime

NOTE

If your seatbelt warning device does not operate as described below, it may be malfunctioning. We recommend that you have the device inspected and, if necessary, repaired by the nearest SUBARU dealer.

▼ Seatbelt warning for driver's seat

Your vehicle is equipped with a seatbelt warning device for the driver's seat.

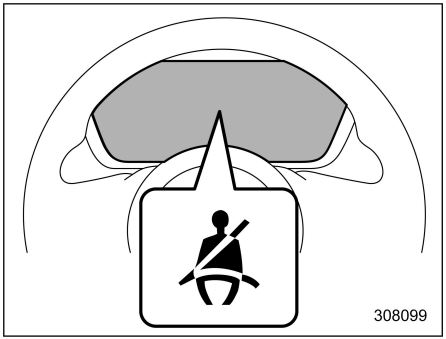

Driver's warning light

With the ignition switch turned to the "ON" position, this device reminds the driver to wear the seatbelt by illuminating the seatbelt warning light on the combination meter.

If the vehicle is driven at a speed no higher than approximately 20 km/h (13 mph) with the driver's seatbelt not fastened, the warning light will illuminate continuously.

If the vehicle reaches a speed of approximately 20 km/h (13 mph) with the driver's seatbelt not fastened, the warning light will flash and the chime will sound. If the seatbelt is fastened at this time, the warning light will turn off and the chime will stop sounding immediately.

This condition will continue for approximately 2 minutes. If the driver's seatbelt is still not fastened when the 2-minute period has elapsed, the warning light will stop flashing and the chime will stop sounding. The warning light, however, will remain illuminated continuously unless the seatbelt is fastened.

▼ Seatbelt warning for front passenger's seat

Your vehicle is equipped with a seatbelt warning device for the front passenger's seat.

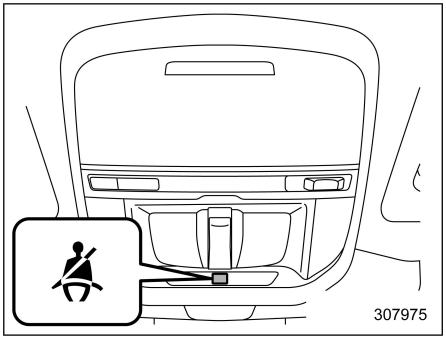

Front passenger's warning light

With the ignition switch turned to the "ON" position, this device reminds the front passenger to fasten his/her seatbelt by illuminating a warning light as shown in the illustration.

If the vehicle is driven at a speed no higher than approximately 20 km/h (13 mph) with the front passenger's seatbelt not fastened, the warning light(s) corresponding to the unfastened seatbelt(s) will illuminate continuously.

If the vehicle reaches a speed of approximately 20 km/h (13 mph) with the front passenger's seatbelt not fastened, the warning light will flash and the chime will sound.

If the seatbelt is fastened at this time, the warning light will turn off and the chime will stop sounding immediately.

WARNING

- **The driver must check that all the passengers have fastened their seatbelts properly since the seatbelt warning system may not detect passengers under the following circumstances.**
  - **When cushions or child restraint system, etc., are used.**
  - **When a child or small adult is sitting in the seat.**
- **Observe the following precautions. Failure to do so may prevent the seatbelt warning system from functioning correctly or cause the system to fail.**
  - **Do not apply any strong impact to the front passenger's seat.**
  - **Do not let rear passengers rest their feet between the front seatback and seat cushion.**
  - **Do not insert objects between the front seatback and seat cushion.**
  - **Do not remove or disassemble the front passenger's seat.**
  - **Do not place any objects (shoes, umbrella, etc.) under the front passenger's seat.**

CAUTION

- **Do not install any accessory such as a table or TV onto the seatback.**
- **Do not store a heavy load in the seatback pocket.**
- **Do not insert objects between the front seatback and seat cushion.**
- **Do not use front seats with their backward-forward position and seatback not being locked into place securely. If any of them are not locked securely, adjust them again. For adjusting procedure, refer to "Manual Seat" ☞P50.**

NOTE

- **If the driver's and front passenger's seatbelts are not fastened simultaneously (if one seatbelt is fastened significantly earlier or later than the other), the buzzer may sound longer (10 seconds maximum).**
- **The seatbelt warning system of the front passenger's seat detects if the**

– CONTINUED –

seat is occupied by a passenger. However, if there is an object on the seat, the seatbelt warning system may be activated even the seat is not occupied.

If the front passenger's seatbelt is still not fastened when the 2-minute period has elapsed, the warning light will stop flashing and the chime will stop sounding. The warning light, however, will remain illuminated continuously unless the corresponding seatbelt is fastened.

If the seatbelt warning system for the front passenger's seat does not function correctly (e.g., it is activated even when the front passenger's seat is empty or it is deactivated even when the front passenger has not fastened his/her seatbelt), take the following actions. Ensure that no article is placed on the seat other than a child restraint system and its child occupant, although we strongly recommend that all children sit in the rear seat properly restrained. Ensure that there is no article left in the seatback pocket. Ensure that the backward-forward position and seatback of front passenger's seat are locked into place securely by moving the seat back and forth. If still the seatbelt warning system for front passenger's seat does not function correctly after taking relevant corrective actions described above, immediately contact your SUBARU dealer for an inspection.

■ Rear Seatbelt Warning Light and Chime

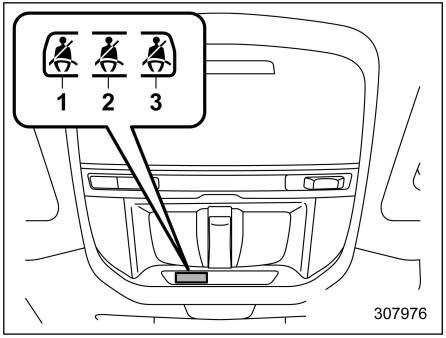

Rear seatbelt warning light

1 Rear seat (left position)
2 Rear seat (center position)
3 Rear seat (right position)

This warning light is located as shown in the illustration. It illuminates to show only the seating positions in which seatbelts have not been fastened.

⚠ WARNING

- **The driver must check that all the passengers have fastened their seatbelts properly since the seatbelt warning system may not detect passengers under the following circumstances.**
  - **When cushions or child restraint systems, etc., are used**
  - **When a child or small adult is sitting in the seat**
- **Observe the following precautions.**
  - **Do not apply any strong impact to the rear seat.**
  - **Do not fold the seatback forward when objects are on the seat.**
  - **Do not spill liquid on the rear seat. If liquid is spilled, wipe it off immediately.**
  - **Do not remove or disassemble the rear seat.**

NOTE

- **The seatbelt warning system of the rear seat detects if the seat is occupied by a passenger. However, if there is an object on the seat, the seatbelt warning system may be activated even the seat is not occupied.**
- **If the seatbelt is unfastened while the vehicle is in motion, an alarm**

may sound for a certain period of time.

Example:
If you mistakenly insert your seatbelt tongue into the buckle of the seat next to you and then pull out the seatbelt tongue while the vehicle is in motion, the alarm will sound.

■ SRS Airbag System Warning Light

⚠ WARNING

If the warning light exhibits any of the following conditions, immediately stop the vehicle in a safe place, and we recommend that you consult a SUBARU dealer. Unless a technician checks and repairs the system as needed, the seatbelt pretensioners and/or the SRS airbag will not operate properly in the event of a collision, which may result in injury.

- **Flashing or flickering of the warning light**
- **No illumination of the warning light when the ignition switch is first turned to the "ON" position**
- **Continuous illumination of the warning light**
- **Illumination of the warning light while driving**

For details about the SRS airbag system warning light, refer to "SRS Airbag System Monitors" ☞P123.

■ Front Passenger's Frontal Airbag ON and OFF Indicator Lights (If Equipped)

NOTE

For details about the operating conditions of SRS seat cushion airbag, refer to "SRS Airbag" ☞P108.

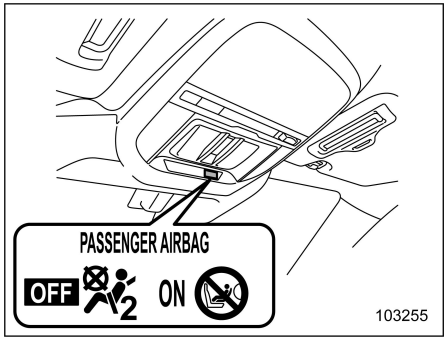

OFF: Front passenger's frontal airbag OFF indicator light

ON: Front passenger's frontal airbag ON indicator light

The front passenger's frontal airbag ON and OFF indicator lights show you the status of the front passenger's SRS frontal airbag.

The indicators are located as shown in the illustration.

When the ignition switch is turned to the "ON" position, both the ON and OFF indicator lights illuminate for 6 seconds during which time the system is checked. Following the system check, both indicators turn off for 2 seconds. After that, one of the indicators illuminates depending on the status of the front passenger's SRS frontal airbag determined by the frontal airbag system monitoring.

If the front passenger's SRS frontal airbag is activated, the passenger's frontal airbag ON indicator light will illuminate while the OFF indicator light will remain off.

If the front passenger's SRS frontal airbag is deactivated, the passenger's frontal airbag ON indicator light will remain off while the OFF indicator light will illuminate.

With the ignition switch turned to the "ON" position, if both the ON and OFF indicator lights remain illuminated or off simultaneously even after the system check period, the system is malfunctioning. We recommend that you contact your SUBARU dealer immediately for an in-

– CONTINUED –

spection.

■ Malfunction Indicator Light (Check Engine Light)

▼ Models equipped with OBD system

Vehicles sold in some countries may be equipped with the OBD system. We recommend that you ask your SUBARU dealer to ascertain whether your vehicle has the OBD system.

The OBD system helps to protect the environment by ensuring that emissions are at acceptable levels for the life of the vehicle.

If the malfunction indicator light illuminates steadily or blinks while the e-BOXER system is running, it may indicate that there is at least one problem or potential problem somewhere in the emission control system and that service is required. The OBD system also assists your service technician in properly diagnosing any malfunction.

⚠ CAUTION

If the malfunction indicator light illuminates while you are driving, we recommend that you have your vehicle checked/repaired by your SUBARU dealer as soon as possible. Continued vehicle operation without having the emission control system checked and repaired as necessary could cause serious damage, which may not be covered by your vehicle's warranty.

▽ If the light illuminates steadily

If the light illuminates steadily while driving or does not turn off after the e-BOXER system starts, an emission control system malfunction has been detected.

We recommend that you have your vehicle checked by an authorized SUBARU dealer immediately.

▽ If the light is blinking

If the light is blinking while driving, an engine misfire condition has been detected which may damage the emission control system.

To prevent serious damage to the emission control system, you should do the following.

- Reduce vehicle speed.
- Avoid hard acceleration.
- Avoid steep uphill grades.
- Reduce the amount of cargo, if possible.
- Stop towing a trailer as soon as possible.

The malfunction indicator light may stop blinking and illuminate steadily after several driving trips. We recommend that you have your vehicle checked by an authorized SUBARU dealer immediately.

▼ Models NOT equipped with OBD system

If the malfunction indicator light illuminates when the e-BOXER system is running, it may indicate that there is a problem somewhere in the engine control system.

If the light illuminates while driving or does not turn off after the e-BOXER system starts, we recommend that you contact your nearest SUBARU dealer immediately.

■ Charge Warning Light

If this light illuminates when the e-BOXER system is running, it may indicate that the charging system is not working properly.

If the charge warning light illuminates while you are driving the vehicle or does not turn off after the e-BOXER system starts, there may be a malfunction in the charging system. Stop the e-BOXER system at the first safe opportunity and we recommend that you contact your nearest SUBARU

dealer immediately.

■ Oil Pressure Warning Light

⚠ CAUTION

Do not operate the e-BOXER system with the oil pressure warning light on. This may cause serious engine damage.

If this light illuminates when the e-BOXER system is running, it may indicate that the engine oil pressure is low and the lubricating system is not working properly.

If the light illuminates while driving or does not turn off after the e-BOXER system starts, stop the e-BOXER system at the first safe opportunity and we recommend that you contact your nearest SUBARU dealer immediately.

■ Engine Low Oil Level Warning Light

This light illuminates when the engine oil level decreases to the lower limit.

If the warning light illuminates, check the engine oil level on a level surface. When the engine oil level is not within the normal range, refill with engine oil. Refer to "Engine Oil" ☞P478. If the warning light does not turn off after refilling the engine oil, or the light illuminates even though the engine oil level is within the normal range, we recommend that you have the vehicle checked by a SUBARU dealer.

NOTE

- **The oil level will be detected by the system just after turning the ignition switch to the "ON" position, and the low oil level warning light will turn on when the oil level is below the lower limit. The warning light will turn off when the ignition switch is turned to the "OFF" position.**
- **In the following cases, the low oil level warning light may not illuminate even if the oil level is below the lower limit to avoid the erroneous lighting.**
  - **The car is parked on a steep slope.**
  - **Rapid acceleration, hard braking or rapid steering occurred during EV driving.**
  - **The engine was restarted within a few hours.**

■ Low Tire Pressure Warning Light (If Equipped)

When the ignition switch is turned to the "ON" position, the low tire pressure warning light will illuminate for approximately 2 seconds to check that the tire pressure monitoring system (TPMS) is functioning properly. If the system functions normally and the tire pressure of all four wheels is appropriate for the selected TPMS mode, the warning light will turn off. The TPMS mode should be changed according to the specified pressure shown on the tire inflation pressure label. For how to change a mode and information about the mode to be selected, refer to "Tire Pressure Monitoring System (TPMS)" ☞P341.

Each tire should be checked monthly when cold and inflated to the inflation pressure recommended by the vehicle manufacturer on the vehicle placard or tire inflation pressure label. (If your vehicle has tires of a different size than the size indicated on the vehicle placard or tire inflation pressure label, you should determine the proper tire inflation pressure for those tires.)

As an added safety feature, your vehicle has been equipped with a tire pressure monitoring system (TPMS) that illuminates

– CONTINUED –

a low tire pressure telltale when one or more of your tires is significantly under-inflated. Accordingly, when the low tire pressure telltale illuminates, you should stop and check your tires as soon as possible, and inflate them to the proper pressure. Driving on a significantly under-inflated tire causes the tire to overheat and can lead to tire failure. Under-inflation also reduces fuel efficiency and tire tread life, and may affect the vehicle's handling and stopping ability.

Please note that the TPMS is not a substitute for proper tire maintenance, and it is the driver's responsibility to maintain correct tire pressure, even if under-inflation has not reached the level to trigger illumination of the TPMS low tire pressure telltale.

Your vehicle has also been equipped with a TPMS malfunction indicator to indicate when the system is not operating properly. The TPMS malfunction indicator is combined with the low tire pressure telltale. When the system detects a malfunction, the telltale will flash for approximately one minute and then remain continuously illuminated. This sequence will continue upon subsequent vehicle start-ups as long as the malfunction exists. When the malfunction indicator is illuminated, the system may not be able to detect or signal low tire pressure as intended. TPMS malfunctions may occur for a variety of reasons, including the installation of replacement or alternate tires or wheels on the vehicle that prevent the TPMS from functioning properly. Always check the TPMS malfunction telltale after replacing one or more tires or wheels on your vehicle to ensure that the replacement or alternate tires and wheels allow the TPMS to continue to function properly.

Should the warning light illuminate steadily after blinking for approximately one minute, we recommend that you have the system inspected by your nearest SUBARU dealer as soon as possible.

⚠ WARNING

If this light does not illuminate briefly after the ignition switch is turned on or the light illuminates steadily after blinking for approximately one minute, we recommend that you have your tire pressure monitoring system (TPMS) checked at a SUBARU dealer as soon as possible.

If this light illuminates while driving, never brake suddenly and keep driving straight ahead while gradually reducing speed. Then slowly pull off the road to a safe place. Otherwise an accident involving serious vehicle damage and serious personal injury could occur.

If this light still illuminates while driving after adjusting the tire pressure, a tire may have significant damage and a fast leak that causes the tire to lose air rapidly. If you have a flat tire, refer to "Flat Tires" ☞P430.

When a replacement tire is mounted or a wheel rim is replaced without the original pressure sensor/transmitter being transferred, the Low tire pressure warning light will illuminate steadily after blinking for approximately one minute. This indicates the TPMS is unable to monitor all four road wheels. We recommend that you contact your SUBARU dealer as soon as possible for tire and sensor replacement and/or system resetting. If the light illuminates steadily after blinking for approximately one minute, we recommend that you promptly contact a SUBARU dealer to have the system inspected.

When a tire is repaired with liquid sealant, the tire pressure warning valve and transmitter may not operate properly. If a liquid sealant is

used, we recommend that you contact your nearest SUBARU dealer or other qualified service shop as soon as possible. Make sure to replace the tire pressure warning valve and transmitter when replacing the tire. You may reuse the wheel if there is no damage to it and if the sealant residue is properly cleaned off. If the light illuminates steadily after blinking for approximately one minute, we recommend that you promptly contact a SUBARU dealer to have the system inspected.

CAUTION

The tire pressure monitoring system is NOT a substitute for manually checking tire pressure. The tire pressure should be checked periodically (at least monthly) using a tire gauge. Change the TPMS mode according to the specified pressure shown on the tire inflation pressure label. After any change to tire pressure(s), the tire pressure monitoring system will not re-check tire inflation pressures until the vehicle is first driven more than 40 km/h (25 mph). After adjusting the tire pressures, increase the vehicle speed to at least 40 km/h (25 mph) to start the TPMS re-checking of the tire inflation pressures. If the tire pressures are now above the severe low pressure threshold, the low tire pressure warning light should turn off a few minutes later. Therefore, be sure to install the specified size for the front and rear tires.

■ ABS Warning Light

CAUTION

- **If any of the following conditions occur, we recommend that you have the ABS repaired at the first available opportunity by your SUBARU dealer.**
  - **The warning light does not illuminate when the ignition switch is turned to the "ON" position.**
  - **The warning light illuminates when the ignition switch is turned to the "ON" position, but it does not turn off even after starting the vehicle.**
  - **The warning light illuminates during driving.**
- **When the warning light is on (and brake system warning light (red) is off), the ABS function shuts down; however, the conventional brake system continues to operate normally.**

The ABS warning light illuminates together with the brake system warning light (red) if the EBD system malfunctions. For further details of the EBD system malfunction warning, refer to "Brake System Warning Light (Red)" ☞P188.

NOTE

If the warning light behavior is as described in the following conditions, the ABS may be considered normal.

- **The warning light illuminates right after the e-BOXER system is started but turns off immediately, remaining off.**
- **The warning light remains illuminated after the e-BOXER system has been started, but it turns off while driving.**
- **The warning light illuminates during driving, but it turns off immediately and remains off.**

When driving with an insufficient battery voltage such as when the e-BOXER system is jump started, the ABS warning light may illuminate. This is due to the low

– CONTINUED –

battery voltage and does not indicate a malfunction. When the battery becomes fully charged, the light will turn off.

■ Brake System Warning Light (Red)

WARNING

- **Driving with the brake system warning light (red) on is dangerous. This indicates your brake system may not be working properly. If the light remains illuminated, we recommend that you have the brakes inspected by a SUBARU dealer immediately.**
- **If at all in doubt about whether the brakes are operating properly, do not drive the vehicle. We recommend that you have your vehicle towed to the nearest SUBARU dealer for repair.**

The brake system warning light (red) has the following functions.

▼ Brake fluid level warning

The light illuminates when the brake fluid level has dropped to near the “MIN” level of the brake fluid reservoir with the ignition switch in the “ON” position and with the parking brake fully released.

If the light should illuminate while driving (with the parking brake fully released and with the ignition switch positioned in “ON”), it could be an indication of leaking of brake fluid or worn brake pads. If this occurs, immediately stop the vehicle at the nearest safe location and check the brake fluid level. For details, refer to “Brake Fluid” ☞P488. If the fluid level is below the “MIN” mark in the reservoir, do not drive the vehicle. We recommend that you have the vehicle towed to the nearest SUBARU dealer for repair. For details, refer to “Towing” ☞P444.

▼ Electronic Brake Force Distribution (EBD) system warning

The EBD system may be malfunctioning if the brake system warning light (red) and ABS warning light illuminate simultaneously during driving.

Even if the EBD system fails, the conventional braking system will still function. However, the rear wheels will be more prone to locking when the brakes are applied harder than usual and the vehicle’s motion may therefore become somewhat harder to control.

If the brake system warning light (red), Vehicle Dynamics Control warning light and ABS warning light illuminate simultaneously, take the following steps.

1. Stop the vehicle in the nearest safe, flat location.
2. Shut down the e-BOXER system, apply the parking brake, and then restart it.
3. Fully release the parking brake.
4. Even if all the warning lights do not come back on, the EBD system may have a possible malfunction. Drive carefully to the nearest SUBARU dealer and have the system inspected.
5. If all the warning lights stay illuminated or come back on after approximately 2 seconds, shut down the e-BOXER system, apply the parking brake and check the brake fluid level. For details, refer to “Brake Fluid” ☞P488.

- If the brake fluid level is not below the “MIN” mark, the EBD system may be malfunctioning. Drive carefully to the nearest SUBARU dealer and we recommend that you have the system inspected.
- If the brake fluid level is below the “MIN” mark, DO NOT drive the vehicle. Instead, we recommend that you have the vehicle towed to the nearest SUBARU dealer for repair. For details, refer to “Towing” ☞P444.

▼ **Electronic brake booster warning**

The brake system warning light (red) illuminates when the electronic brake booster is malfunctioning. In addition, the warning messages “Brake System” and “Check Owner’s Manual” are displayed alternately on the combination meter display. If the warning light illuminates, promptly park in a safe location as soon as possible and we recommend that you contact your SUBARU dealer.

■ Electronic Parking Brake Warning Light/ Brake System Warning Light (Yellow)

This light illuminates when the electronic parking brake system or brake system is malfunctioning.

⚠ WARNING

When the electronic parking brake warning light illuminates, immediately stop the vehicle in a safe location and we recommend that you contact your SUBARU dealer.

NOTE

- **If the warning light behaves as described in the following conditions, the electronic parking brake system is operating normally.**
  - **The warning light remains illuminated after the e-BOXER system is started, but it turns off after the electronic parking brake is released, and the warning light remains off.**
  - **The warning light illuminates during driving, but it turns off and remains off.**
- **If you start the e-BOXER system while operating the electronic parking brake switch, the electronic parking brake warning light may illuminate. In this case, restart the e-BOXER system and then operate the electronic parking brake switch. If the warning light turns off, the system may be considered normal.**

■ Electronic Parking Brake Indicator Light

▼ **Parking brake indicator**

The light illuminates with the parking brake applied while the ignition switch is in the “ACC” or “ON” position. It turns off when the parking brake is fully released.

▼ **Electronic parking brake system warning**

⚠ WARNING

- **When you release the electronic parking brake while the e-BOXER system is running, the electronic parking brake indicator light will turn off. However, if the light still illuminates, stop the vehicle in a safe location immediately and we recommend that you have the system inspected by a SUBARU dealer.**
- **If at all in doubt about whether the brakes are operating properly, do not drive the vehicle. We recommend that you have your vehicle towed to the nearest SUBARU dealer for repair.**
- **If the electronic parking brake indicator light flashes, the electronic parking brake system may be malfunctioning. Immediately stop your vehicle in a safe location, use tire stops under the tires to prevent the vehicle from moving and we recommend that you contact your SUBARU dealer. For details, refer to “Electronic Parking Brake” ☞P343.**

– CONTINUED –

NOTE

- **When the ignition switch is turned to the "OFF" position with the electronic parking brake applied, the electronic parking brake indicator light remains illuminated for approximately 30 seconds and then turns off.**
- **When the electronic parking brake switch is pulled to apply the electronic parking brake while the ignition switch is in the "OFF" position, the electronic parking brake indicator light illuminates, remains illuminated for approximately 30 seconds and then turns off.**
- **Even if the electronic parking brake indicator light flashes, if the warning light behavior is as described in the following examples, the electronic parking brake system is not malfunctioning.**
  - **The indicator light turns off when the electronic parking brake is released.**
- **The electronic parking brake indicator light may flash immediately after the e-BOXER system is started. However, it is not malfunctioning if the indicator light turns off after the electronic parking brake is released.**
- **The electronic parking brake indicator light may flash after the electronic parking brake is frequently applied and released. However, the electronic parking brake system is not malfunctioning if the light turns off after a short period of time.**

The electronic parking brake indicator light flashes when the electronic parking brake system is malfunctioning. If the indicator light flashes, promptly park in a safe location as soon as possible and we recommend that you contact your SUBARU dealer.

The electronic parking brake indicator light remains illuminated when the parking brake cannot be released even if the electronic parking brake switch is pushed. For details, refer to "Electronic Parking Brake" ☞P343.

▽ Parking brake apply inhibit warning

The electronic parking brake indicator light flashes for 10 seconds and a chirp sound will be heard if the electronic parking brake switch is operated when the parking brake cannot be applied.

▽ Frequent operation warning

The electronic parking brake indicator light flashes for 10 seconds and a chirp sound will be heard if the electronic parking brake switch is operated too frequently. In this case, the operation of the electronic parking brake switch is restricted to protect the electronic parking brake system.

NOTE

Wait until the indicator light turns off.

■ Auto Vehicle Hold Indicator Light

CAUTION

If the Auto Vehicle Hold indicator light does not illuminate even when "Auto Vehicle Hold (AVH)" is touched to activate the Auto Vehicle Hold function, the electronic parking brake system may be malfunctioning.

This indicator illuminates when the Auto Vehicle Hold is activated. This indicator blinks while the vehicle is stopped by the Auto Vehicle Hold function. For details, refer to "Auto Vehicle Hold function" ☞P345.

■ Low Fuel Warning Light

The low fuel warning light illuminates when the tank is nearly empty approximately 9.0 liters (2.3 US gal, 1.9 Imp gal). It only operates when the ignition switch is in the “ON” position. When this light illuminates, fill the fuel tank immediately.

CAUTION

Promptly put fuel in the tank whenever the low fuel warning light illuminates. An engine misfire as the result of an empty tank could cause damage to the engine. In addition, if the fuel tank is empty, the AWD system or EyeSight system may not operate properly.

■ Door Open Indicator Light

When any of the doors or the rear gate is not fully closed, the door open indicator light appears. This function is effective even if the ignition switch is in the “OFF” or “ACC” position.

The open door is indicated by the corresponding part of the door open indicator light.

Always make sure this indicator does not appear before you start to drive.

■ Engine Hood Open Warning Light

The warning light illuminates if the engine hood is not fully closed. This function is effective even if the ignition switch is in the “OFF” or “ACC” position.

Always make sure this light is not illuminated before you start to drive.

■ Windshield Washer Fluid Warning Light

This light appears when the fluid level in the windshield washer fluid tank decreases to the lower limit (approximately 0.6 liters (0.6 US qt, 0.5 Imp qt)).

■ All-Wheel Drive Warning Light

WARNING

Continued driving with the All-Wheel Drive warning light flashing can lead to powertrain damage. If the All-Wheel Drive warning light flashes, promptly park in a safe location and then check whether all four tires are the same diameter and whether any of the tires has a puncture or has lost air pressure for some other reason.

The AWD warning light may flash in the following driving situations.

- The vehicle is equipped with tires that have different wheel diameters.
- The tire pressure is excessively low.
- The charge level of the high voltage battery is low.
- When the level of fuel in the tank is low.

■ Power Steering Warning Light

While the e-BOXER system is running, this warning light illuminates when a malfunction has been detected in the electric power steering system.

CAUTION

When the power steering warning light is illuminated, there may be more resistance when the steering wheel is operated. Drive carefully to the nearest SUBARU dealer and we recommend that you have the vehicle inspected immediately.

– CONTINUED –

NOTE

If the steering wheel is operated in the following ways, the power steering control system may temporarily limit the power assist in order to prevent the system components, such as the control computer and drive motor, from overheating.

- **The steering wheel is operated frequently and turned sharply while the vehicle is maneuvered at extremely low speeds, such as while frequently turning the steering wheel during parallel parking.**
- **The steering wheel remains in the fully turned position for a long period of time.**

At this time, there will be more resistance when steering. However, this is not a malfunction. Normal steering force will be restored after the steering wheel is not operated for a while and the power steering control system has an opportunity to cool down. However, if the power steering is operated in a non-standard way which causes power assist limitation to occur too frequently, that may result in a malfunction of the power steering control system.

■ Vehicle Dynamics Control Warning Light/Vehicle Dynamics Control Operation Indicator Light

▼ **Vehicle Dynamics Control warning light**

⚠ CAUTION

The Vehicle Dynamics Control system provides its ABS control through the electrical circuit of the ABS. Accordingly, if the ABS is inoperative, the Vehicle Dynamics Control system becomes unable to provide ABS control. As a result, the Vehicle Dynamics Control system becomes inoperative, causing the warning light to illuminate. Although both the Vehicle Dynamics Control and ABS are inoperative in this case, the ordinary functions of the brake system are still available. You will be safe while driving in this condition, but drive carefully and we recommend that you have your vehicle checked at a SUBARU dealer as soon as possible.

NOTE

- **If the electrical circuit of the Vehicle Dynamics Control system itself malfunctions, the warning light only illuminates. At this time, the ABS (Anti-lock Brake System) remains fully operational.**
- **The warning light illuminates when the electronic control system of the ABS/Vehicle Dynamics Control system malfunctions.**
- **The Vehicle Dynamics Control warning light, ABS warning light, and brake system warning light (red) illuminate simultaneously if the EBD system malfunctions. For further details of the EBD system malfunction warning, refer to "Electronic Brake Force Distribution (EBD) system warning" ☞P188.**

The Vehicle Dynamics Control system is probably inoperative under any of the following conditions. We recommend that you have your vehicle checked at a SUBARU dealer immediately.

- The warning light does not illuminate when the ignition switch is turned to the "ON" position.
- The warning light illuminates while the vehicle is running.

NOTE

If the warning light behavior is as described in the following examples, the Vehicle Dynamics Control system may be considered normal.

- **The warning light illuminates right after the e-BOXER system is started but turns off immediately and remains off.**
- **The warning light illuminates after the e-BOXER system has started and turns off while the vehicle is subsequently being driven.**
- **The warning light illuminates during driving, but turns off immediately and remains off.**

▼ **Vehicle Dynamics Control operation indicator light**

The indicator light flashes during activation of the skid suppression function and during activation of the traction control function.

NOTE

- **The light may remain illuminated for a short period of time after the e-BOXER system has been started, especially in cold weather. This does not indicate the existence of a problem. The light should turn off as soon as the e-BOXER system has warmed up.**
- **The indicator light illuminates when the engine has developed a problem and the malfunction indicator light (Check Engine light) is on.**

The Vehicle Dynamics Control system is probably malfunctioning under the following condition. We recommend that you have your vehicle checked at a SUBARU dealer as soon as possible.

- The light does not turn off even after the lapse of several minutes (the e-BOXER system has warmed up) after the e-BOXER system has started.

■ Vehicle Dynamics Control OFF Indicator Light

The light illuminates when “Vehicle Dynamics Control” is selected to deactivate the Vehicle Dynamics Control system. Refer to “To Turn On/Off the Vehicle Dynamics Control System” ☞P337.

The Vehicle Dynamics Control system is probably malfunctioning under any of the following conditions. We recommend that you have your vehicle checked at a SUBARU dealer immediately.

- The light does not illuminate while the system check.
- The light does not turn off even after a period of approximately 2 seconds after the ignition switch has been turned to the “ON” position.

■ Warning Chimes and Warning Indicator of the Keyless Access with Push-Button Start System

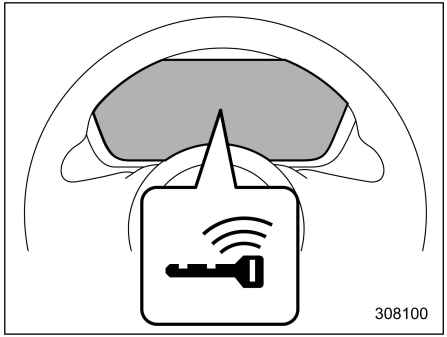

Access key warning indicator

The keyless access with push-button start system is equipped with a warning chime and the access key warning indicator in order to minimize improper operations and help protect your vehicle from theft.

When the warning chime sounds and/or the warning indicator appears, take the appropriate action.

You cannot turn the warning chimes off. However, the volume setting of the outside

– CONTINUED –

warning chime can be changed by a SUBARU dealer. We recommend that you consult your SUBARU dealer for details.

WARNING

Never drive the vehicle if the indicator on the push-button ignition switch is flashing in green when starting the e-BOXER system. This indicates the status that the steering wheel is not released and could result in an accident involving serious injury or death.

CAUTION

- **When starting the e-BOXER system again after the operation indicator on the push-button ignition switch flashes in green, if the operation indicator is still flashing in green, there could be a steering lock malfunction. We recommend that you contact your SUBARU dealer as soon as possible.**
- **When the operation indicator on the push-button ignition switch flashes in orange, we recommend that you contact a SUBARU dealer immediately.**

NOTE

- **Even when the access key fob is within the operating ranges inside the vehicle, the access key warning for the e-BOXER system start may be provided depending on the status of the access key fob and the environmental conditions.**
- **When the access key fob is taken out of the vehicle through an open window, the access key takeout warning or passenger access key takeout warning will not be provided.**

▼ **List of warnings**

CAUTION

When any of the following warnings occurs even if the access key warning indicator does not appear, take the appropriate action.

Inside warning chime	Outside warning chime	Operation indicator on push-button ignition switch	Status	Action
Ding, ding ... (intermittent)	—	—	The driver's door is opened while the push-button ignition switch is in the "ACC" position and the select lever is in the "P" position.	Switch the push-button ignition switch to "OFF", or close the driver's door. When exiting the vehicle, be sure to switch the push-button ignition switch to "OFF".
			The push-button ignition switch is switched to "OFF" while the driver's door is open.	Close the driver's door.
Ding	Beep, beep, beep, beep, beep (5 times)	—	**e-BOXER system operation warning:** The driver's door is opened while the e-BOXER system is operating and the select lever is in the "P" position.	Switch the push-button ignition switch to "OFF", and then close the driver's door. When exiting the vehicle, be sure to switch the push-button ignition switch to "OFF".
Ding	Short beep (2 seconds)	—	**Lockout warning:** The doors are locked by following methods when an access key fob is left in the car. ● The door is closed when the lock lever of the door is in the lock position. ● The door is closed when the power door locking switch is in the lock position.	Take out the access key fob from the vehicle, and lock the doors. The doors cannot be locked while the access key fob is inside the vehicle. A chirp sound will be heard, and all doors will be unlocked.
—	Short beep (2 seconds)	—	**Access key lock-in warning:** The door lock sensor is touched while the push-button ignition switch is "OFF" and the access key fob is inside the vehicle.	Take out the access key fob from the vehicle, and lock the doors. If the access key fob is inside the vehicle, the doors cannot be locked.
—	Beep, beep, beep, beep, beep (5 times)	—	**Door ajar warning:** The door lock sensor is touched while the ignition switch is in the "OFF" position and one of the doors including the rear gate is opened.	Close the doors securely and lock them. If one of the doors including the rear gate is opened, the doors cannot be locked.
Ding	Long beep (60 seconds max.)	—	**Power warning:** The door lock sensor is touched while you are carrying the access key fob, the push-button ignition switch is in a position other than "OFF" and the select lever is in the "P" position.	Return the access key fob inside the vehicle, or switch the push-button ignition switch to "OFF". If the push-button ignition switch is not switched to "OFF", the doors cannot be locked.

– CONTINUED –

Inside warning chime	Outside warning chime	Operation indicator on push-button ignition switch	Status	Action
Ding, ding ... (7 seconds)	—	—	**Access key warning:** The vehicle is driven while the access key fob is not inside the vehicle.	Carry the access key fob, and drive the vehicle.
Ding	—	—	**Access key warning for the e-BOXER system start:** The push-button ignition switch is pressed while the access key fob is not inside the vehicle.	Carry the access key fob, and press the push-button ignition switch.
Ding	Beep, beep, beep (3 times)	—	**Access key takeout warning:** The driver exits the vehicle with the access key fob and closes the driver's door while the push-button ignition switch is in a position other than "OFF" and the select lever is in the "P" position.	Switch the push-button ignition switch to "OFF", and get out of the vehicle.
Ding	Beep, beep, beep (3 times)	—	**Passenger access key takeout warning:** A fellow passenger exits the vehicle with the access key fob and closes a door other than the driver's door while the push-button ignition switch is in a position other than "OFF".	Return the access key fob to inside the vehicle, or switch the push-button ignition switch to "OFF".
Long beep (continuous)	Long beep (continuous)	—	**Access key takeout without "P" position warning:** The driver exits the vehicle with the access key fob and closes the driver's door while the push-button ignition switch is in a position other than "OFF" and the select lever is in a position other than the "P" position.	Shift the select lever to the "P" position, switch the push-button ignition switch to "OFF" and exit the vehicle.

Inside warning chime	Outside warning chime	Operation indicator on push-button ignition switch	Status	Action
Long beep (continuous)	—	—	**Select lever position warning:** ● Case 1: The e-BOXER system is turned off by pressing the push-button ignition switch while the select lever is in a position other than the “P” position. ● Case 2: The driver’s door is opened while the push-button ignition switch is in a position other than “OFF” and the select lever is in a position other than the “P” position.	● Case 1: Start the e-BOXER system, shift the select lever to the “P” position, switch the push-button ignition switch to “OFF” and exit the vehicle. ● Case 2: Shift the select lever to the “P” position, switch the push-button ignition switch to “OFF” and exit the vehicle.
Ding	—	—	The battery of the access key fob is low.	Replace the battery of the access key fob.
Ding	—	Flashes in green	**Steering lock warning:** The e-BOXER system start procedure is performed, but the steering is still locked.	While turning the steering wheel right and left lightly, depress the brake pedal and press the push-button ignition switch.
Ding	—	Flashes in orange	**System malfunction warning:** A malfunction is detected in the power system or steering lock.	We recommend that you contact a SUBARU dealer immediately and have the vehicle inspected.

– CONTINUED –

■ Immobilizer Indicator Light

This indicator light indicates operation of the immobilizer system.

The immobilizer indicator light starts blinking in the following conditions.

- Immediately after the push-button ignition switch is turned to the “OFF” position.
- Immediately after the driver’s door is opened or closed when all of the following conditions are met.
  - The push-button ignition switch is in the “ON” or “ACC” position.
  - The e-BOXER system is not running.

In the event that an unauthorized key is used (for example, the key is unregistered or the ID code does not match), the power is not switched to “ON” and the immobilizer indicator light continues blinking.

NOTE

- **The immobilizer indicator light remains off in the following conditions. It means that the matching of the ID code is completed and the immobilizer system is deactivated, and it does not indicate a malfunction.**
  - **While the e-BOXER system is running**
  - **The push-button ignition switch has been turned to the “ON” or “ACC” position and the driver’s door has not been opened or closed**
- **Even if a malfunction occurs, such as the immobilizer indicator light flashes irregularly, it will not affect the functionality of the immobilizer system.**

■ SI-DRIVE Indicator

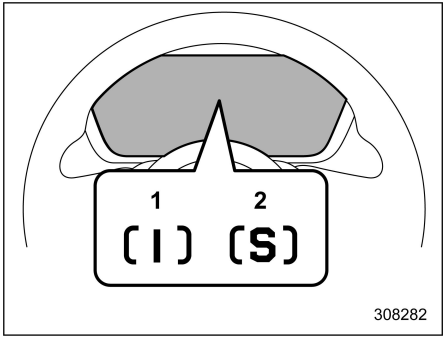

SI-DRIVE indicator

1 Intelligent (I) mode

2 Sport (S) mode

This light indicates the current SI-DRIVE mode.

For details of SI-DRIVE mode, refer to “SI-DRIVE” ☞P329.

■ Select Lever/Gear Position Indicator

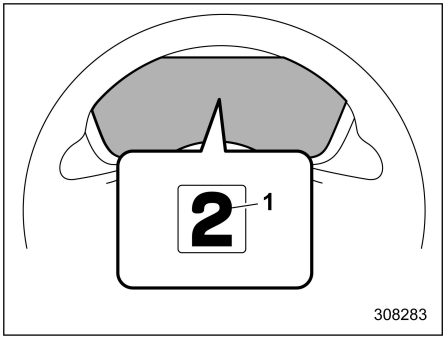

1 Select lever/gear position indicator

The select lever position is displayed on the indicator.

When the manual mode is selected, the current gear position will appear on the indicator. Refer to “Selection of Manual Mode” ☞P327.

■ Turn Signal Indicator Lights

These lights show the operation of the turn signal or lane change signal.

If the indicator lights do not blink or blink rapidly, the turn signal bulb may be burned out. Replace the bulb as soon as possible. Refer to “Replacing Bulbs” ☞P510.

■ High Beam Indicator Light

This light shows that the headlights are in the high beam mode.

This indicator light also illuminates when operating the headlight flasher.

■ High Beam Assist Indicator (If Equipped)

This indicator appears when the high beam assist function is activated. For details about the high beam assist function, refer to “High Beam Assist Function” ☞P246.

■ Automatic Headlight Beam Leveler Warning Light

This light illuminates when the automatic headlight beam leveler does not operate normally.

If this light illuminates while driving, we recommend that you have your vehicle inspected at your SUBARU dealer.

■ LED Headlight Warning Light

This light illuminates if the LED headlights malfunction. We recommend that you have your vehicle inspected at a SUBARU dealer as soon as possible.

■ Steering Responsive Headlight OFF Indicator Light

SRH OFF

This light illuminates when the Steering Responsive Headlight function is off. For details about the on/off setting, refer to “Car settings” ☞P229.

■ Steering Responsive Headlight Warning Light

SRH

The light illuminates when a malfunction occurs in the Steering Responsive Headlight. Refer to “Steering Responsive Headlight (SRH)” ☞P249.

■ Adaptive Driving Beam Warning Light (Yellow) (If Equipped)/Adaptive Driving Beam Indicator Light (Green) (If Equipped)

▼ Adaptive driving beam warning light (yellow)

This light illuminates on the combination meter if malfunctions occur in the system. When this light illuminates, we recommend that you have your vehicle inspected by your SUBARU dealer.

▼ Adaptive driving beam indicator light (green)

This light illuminates when the Adaptive Driving Beam function is activated.

■ Headlight Indicator Light

This indicator light illuminates under the following conditions.

- The light switch is turned to the “≡DC≡” or “≡D” position.
- Models with auto on/off headlights: The light switch is in the “AUTO” position and the headlights illuminate automatically.

– CONTINUED –

■ Front Fog Light Indicator Light

This indicator light illuminates while the front fog lights are illuminated.

■ Rear Fog Light Indicator Light (If Equipped)

This indicator light illuminates while the rear fog light is illuminated.

■ X-MODE Indicator

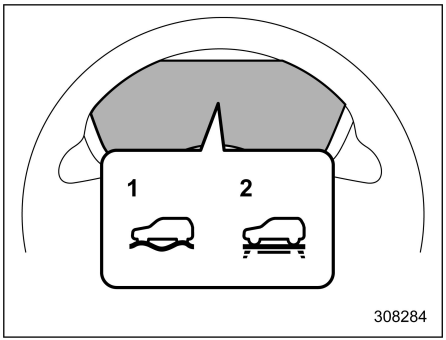

X-MODE indicator

1 DEEP SNOW/MUD mode indicator
2 SNOW/DIRT mode indicator

This indicator appears while X-MODE is activated. It will disappear when X-MODE is deactivated. Refer to “To Activate/Deactivate the X-MODE” ☞P339.

■ Hill Descent Control Indicator Light

This indicator appears while the hill descent control function is in standby. It will flash while the hill descent control function is operating. It will disappear when the hill descent control function is not available. Refer to “Hill Descent Control Function” ☞P340.

■ Subaru Rear Vehicle Detection Warning Indicator (If Equipped)

This warning indicator appears on the combination meter when the Subaru Rear Vehicle Detection (SRVD) is malfunctioning for any reason. For further details, refer to “SRVD Warning Indicator” ☞P374. If this indicator remains displayed, we recommend that you have your vehicle inspected by your SUBARU dealer as soon as possible.

■ Subaru Rear Vehicle Detection OFF Indicator (If Equipped)

This indicator appears on the combination meter when “Rear Vehicle Detection (SRVD)” is touched to deactivate the Subaru Rear Vehicle Detection (SRVD), or when the Subaru Rear Vehicle Detection (SRVD) is suspended temporarily. For details, refer to “SRVD OFF Indicator” ☞P373.

■ Vehicle Detected in Adjacent Lane Indicator (Models with 12.3-Inch Meter Display) (If Equipped)

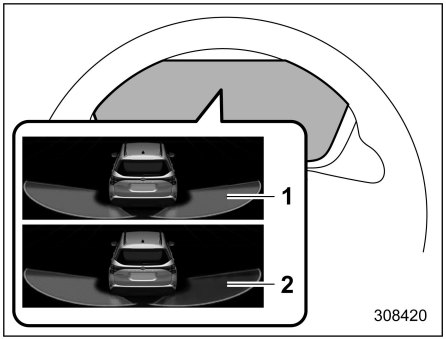

1 When a vehicle is detected (white area with yellow outline is indicated)
2 When the turn signal lever is being operated while a vehicle is detected (yellow area is indicated)

When Subaru Rear Vehicle Detection (SRVD) detects a vehicle approaching from behind in the adjacent lane, the system displays a vehicle detected in adjacent lane indicator on the screen. For details, refer to “Subaru Rear Vehicle

Detection (SRVD)” ☞P366.

■ Icy Road Surface Warning Light

When the outside temperature is 3°C (37°F) or less, the icy road surface warning light will illuminate to inform the driver that the road surface may be frozen.

NOTE

- **The outside temperature indicator shows the temperature in the area around the sensor. However, the temperature may not be indicated correctly or the update may be delayed in the following conditions.**
  - **While parking or driving at low speeds**
  - **When the outside temperature changes suddenly (example: when going in and out of an underground parking area or when passing through a tunnel)**
  - **When starting the e-BOXER system after being parked for a certain period of time**
- **The icy road surface warning light should be treated only as a guide. Be sure to check the condition of the road surface before driving.**
- **Once the icy road surface warning light appears, it will not disappear unless the outside temperature has increased to 5°C (41°F) or higher.**

■ RAB Warning Indicator (If Equipped)

RAB

This indicator illuminates if the Reverse Automatic Braking (RAB) system malfunctions. Refer to “Reverse Automatic Braking (RAB) System” ☞P375.

■ RAB OFF Indicator (If Equipped)

RAB OFF

This indicator illuminates when the Reverse Automatic Braking (RAB) system is turned OFF, or when the Reverse Automatic Braking (RAB) system is suspended temporarily. Refer to “Reverse Automatic Braking (RAB) System” ☞P375.

■ Driver Monitoring System Operation Indicator Light (Green) (If Equipped)

This indicator illuminates when the Driver Monitoring System is activated. Refer to “Driver Monitoring System operation indicator light (green)” ☞P396.

■ Driver Monitoring System Warning Light (Yellow) (If Equipped)

This warning light illuminates if the Driver Monitoring System malfunctions. We recommend that you have your vehicle inspected at a SUBARU dealer as soon as possible. Refer to “Driver Monitoring System warning light (yellow)” ☞P396.

■ Driver Monitoring System OFF Indicator Light (If Equipped)

OFF

This indicator illuminates when “Driver Monitoring System” is touched to deactivate the Driver Monitoring System. Refer to “Driver Monitoring System OFF indicator light” ☞P396.

■ Driver Monitoring System Temporary Stop Indicator Light (If Equipped)

This indicator illuminates when the Driver Monitoring System is temporarily stopped. Refer to “Driver Monitoring System temporary stop indicator light” ☞P396.

– CONTINUED –

NOTE

The Driver Monitoring System stops temporarily in the following circumstances.

- **The temperature of the Driver Monitoring System unit is high.**

■ Sonar Audible Alarm OFF Indicator (If Equipped)

This indicator illuminates when the Sonar Audible Alarm is turned OFF. For the setting procedure, refer to “Car settings” ☞P229.

■ Front Cross Traffic Braking Warning Indicator (If Equipped)

The Front Cross Traffic Braking warning indicator illuminates if there is a malfunction in the Front Cross Traffic Information and Front Cross Traffic Braking. We recommend that you have your vehicle inspected at a SUBARU dealer as soon as possible. Refer to “Front Cross Traffic Information” ☞P359.

■ Front Cross Traffic Braking OFF Indicator (If Equipped)

This indicator illuminates when you touch “Pre-Collision Braking” on the screen to deactivate the Front Cross Traffic Information and Front Cross Traffic Braking. Refer to “Car settings” ☞P229.

■ e-BOXER System Fail Lamp

The e-BOXER system fail lamp illuminates when a malfunction occurs in the e-BOXER system.

⚠ CAUTION

When the e-BOXER system fail lamp is illuminated, an telltale screen will be displayed simultaneously on the combination meter. Perform the procedure shown on the combination meter, then we recommend that you have your vehicle inspected by the nearest SUBARU dealer.

■ e-BOXER System Overheat Warning Light

This warning light illuminates when the temperature of the electric motor or engine is high. When this warning light illuminates, the power output limits are activated and it will only be possible to drive the vehicle at only low speeds. If the e-BOXER system over heat warning light does not turn off, set the shift position to “P” and stop the vehicle for about 5 minutes. When the warning light turns off, normal driving will again be possible. If the warning light stays on even after stopping the vehicle for more than 5 minutes, we recommend that you have your vehicle inspected by your SUBARU dealer.

■ Pedestrian Alert System Warning Indicator Light

This light blinks when a malfunction occurs in the pedestrian alert system.

■ e-BOXER System READY Indicator Light

This light illuminates when the e-BOXER system has started. It turns off when the e-BOXER system has been turned off.

This light flashes while the e-BOXER system is preparing to start.

CAUTION

If the e-BOXER System READY indicator light does not illuminate when the e-BOXER System has been started, we recommend that you have your vehicle checked at a SUBARU dealer.

■ EV (Electric Vehicle) Indicator

EV

This light illuminates in the following cases.

- When driving only using the electric motor power
- When the engine is automatically stopped by the e-BOXER system

■ EV (Electric Vehicle) Drive Mode Indicator

EV MODE

This indicator appears when the EV drive mode is activated. For details, refer to “EV (Electric Vehicle) Drive Mode” ☞P35.

3-6. Combination Meter Display

WARNING

Always pay adequate attention to safe driving when operating the combination meter display while the vehicle is in motion. When operation of the combination meter display interferes with your ability to concentrate on driving, stop the vehicle before performing operations on the screen. Also, do not concentrate on the display while driving. Doing so may cause you to look away from the road and could result in an accident.

Various information will be shown on the combination meter display. Also, a warning message will appear on the display if a malfunction is detected. In addition, several settings for the displayed content can be performed.

■ 4.2-Inch Meter Display Models

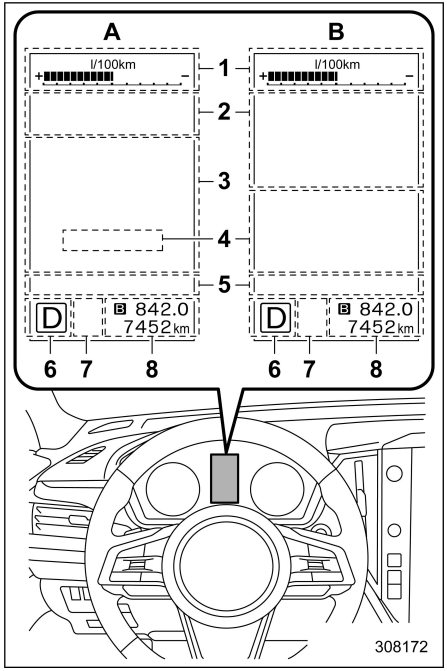

Combination meter display

1 Meter information screen (Refer to “Meter Information Screen” ☞P208.)

– CONTINUED –

2 Warning screen (Refer to “Warning Screen” ☞P208.)/Basic screen (Refer to “Basic Screens” ☞P211.)
3 EyeSight screen*
4 Digital speed screen (Refer to “Digital Speed Screen” ☞P214.)
5 Telltale screen (Refer to “Telltale Screen” ☞P209.)
6 Select lever/gear position indicator (Refer to “Select Lever/Gear Position Indicator” ☞P198.)
7 X-MODE indicator (Refer to “X-MODE Indicator” ☞P200.)/SI-DRIVE indicator light (Refer to “SI-DRIVE Indicator” ☞P198.)
8 Odometer (Refer to “Odometer” ☞P176.)/Double trip meter (Refer to “Double Trip Meter” ☞P176.)
A: Activating the EyeSight system
B: Deactivating the EyeSight system
*: For details, refer to the separate EyeSight Owner’s Manual.

■ 12.3-Inch Meter Display Models

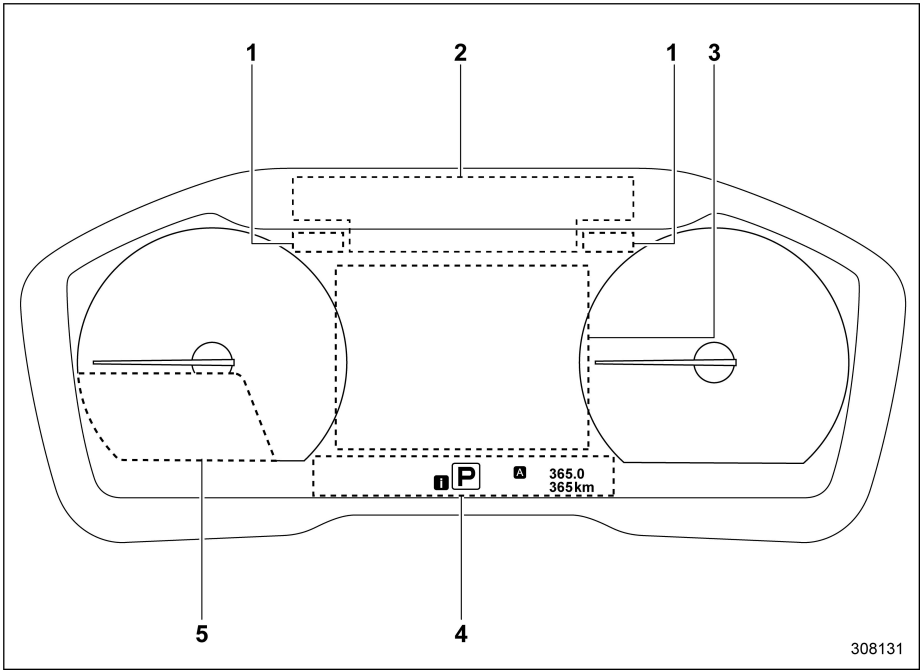

1 Meter information screen (Refer to “Meter Information Screen” ☞P208.)

2 Warning indicator (Refer to “Warning and Indicator Lights” ☞P179.)

3 Digital speed screen (Refer to “Digital Speed Screen” ☞P214.)/Warning screen (Refer to “Warning Screen” ☞P208.)
EyeSight screen*

4 Odometer (Refer to “Odometer” ☞P176.)
Double trip meter (Refer to “Double Trip Meter” ☞P176.)
SI-DRIVE indicator (Refer to “SI-DRIVE Indicator” ☞P198.)
X-MODE Indicator (Refer to “X-MODE Indicator” ☞P200.)
Select lever/gear position indicator (Refer to “Select Lever/Gear Position Indicator” ☞P198.)
Telltale screen (Refer to “Telltale Screen” ☞P209.)
Warning indicator (Refer to “Warning and Indicator Lights” ☞P179.)

5 Basic screen (Refer to “Basic Screens” ☞P211.)/Warning screen (Refer to “Warning Screen” ☞P208.)

*: For details, refer to the separate EyeSight Owner’s Manual.

– CONTINUED –

▼ Meter Display Mode (12.3-inch meter display models)

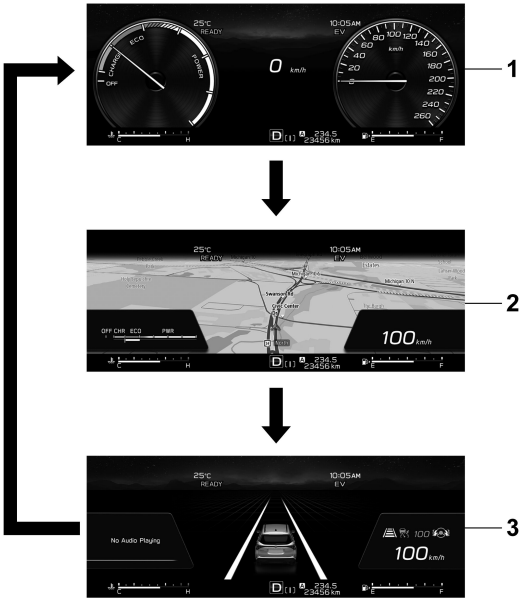

308327

1 Normal mode
In normal mode, the analogue power meter and speedometer display respectively.

2 Map mode*1
In map mode, the power meter and speedometer are displayed together with the genuine SUBARU navigation system.

3 EyeSight mode*2
The EyeSight mode screen displays the vehicle operating status and surroundings.

*1: For details about the audio and navigation system, refer to the Owner's Manual supplement for the audio and navigation system.

*2: For details about the EyeSight system, refer to the Owner's Manual supplement for the EyeSight system.

There are three different screen modes to choose from. To change the screen mode, press and hold the "" switch or operate the Center Information Display settings. Refer to "General settings" ☞P225.

NOTE

- **When a warning screen or a turn-by-turn display is displayed, the screen mode cannot be switched.**
- **Depending on the mode, the display location of such things as the instruments, basic screen, and EyeSight screen will change.**

■ Basic Operation

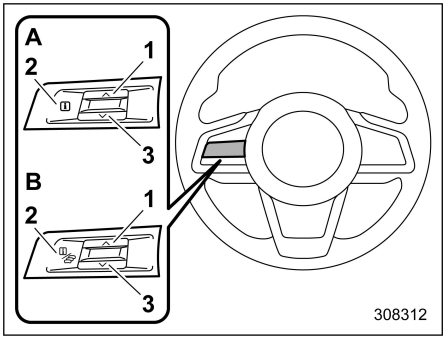

Control switches

A 4.2-inch meter display models
B 12.3-inch meter display models
1 ∧
2 i
3 ∨

By operating ∧ or ∨ of the control switches, the screens can be changed.

If there are some useful messages, such as vehicle information, warning information, etc., they will interrupt the current screen, and appear on the display accompanied by a beep. If such a screen is displayed, take proper action according to the message shown on the screen.

The warning screen will return to the original screen after a few seconds. While the i information reminder is shown on the display, it may be possible to display the warning screen again. To recall the message marked with i on the display, press the i switch on the steering wheel.

NOTE

If the warning screen does not disappear even after you follow the on-screen instructions, we recommend that you contact your SUBARU dealer to have the vehicle inspected immediately.

■ Welcome Screen (Opening Animation) and Good-Bye (Ending Animation) Screen

When the driver's door is opened and closed after unlocking the door, the welcome screen (opening animation) will appear on the combination meter display for approximately 20 seconds.

When the ignition switch is turned to the "OFF" position, the combination meter display gradually turns off by showing good-bye screen (ending animation).

NOTE

- **The welcome screen and the good-bye screen may differ in the actual words and appearance.**
- **The basic screen will be shown when the ignition switch is turned to the "ON" position while the welcome screen is displayed.**
- **Once the welcome screen appears, it takes a certain period of time to display it again.**
- **If the ignition switch is operated after unlocking the driver's door, the welcome screen will not appear even when the driver's door is opened and closed.**
- **The welcome screen will disappear when you lock the driver's door by using the remote keyless entry system or the keyless access function while the welcome screen is displayed.**
- **The welcome screen including the audio/navigation unit can be set to on or off.**
- **The welcome screen can be set to on or off. For details, refer to "General settings" ☞P225.**
- **The good-bye screen can be set to on or off. For details, refer to "General settings" ☞P225.**

– CONTINUED –

■ Warning Screen

Example of warning

If there is a warning message or a maintenance notification, it will appear on combination meter display. Take the appropriate actions based on the messages indicated.

■ Meter Information Screen

The meter information screen can be changed. For details, refer to “General settings” ☞P225.

▼ Clock and temperature

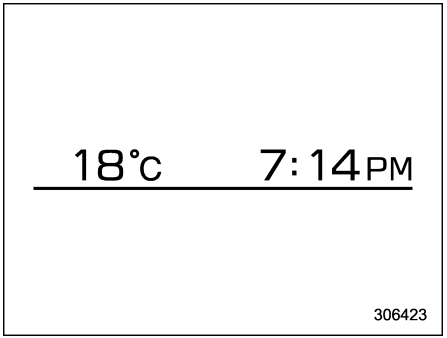

4.2-inch meter display models

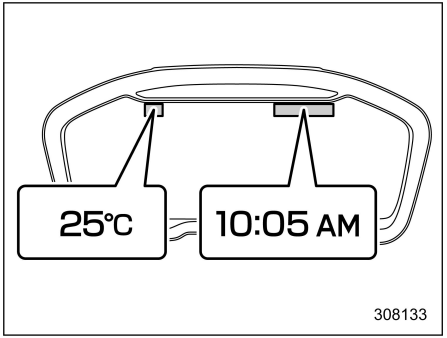

12.3-inch meter display models

This screen displays the clock and outside temperature.

For details about clock setting, refer to “Clock” ☞P241.

NOTE

- **The clock can be displayed in either 12-hour display or 24-hour display. For details, refer to “General settings” ☞P225.**
- **The outside temperature indicator shows the temperature in the area around the sensor. However, the temperature may not be indicated correctly or the update may be delayed in the following conditions.**
  - **While parking or driving at low speeds**
  - **When the outside temperature changes suddenly (example: when going in and out of an underground parking area or when passing through a tunnel)**
  - **When starting the e-BOXER system after being parked for a certain period of time**

▼ Compass (if equipped)

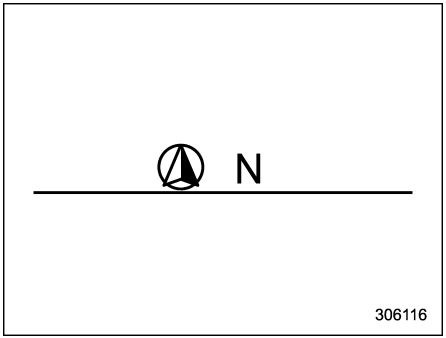

4.2-inch meter display models

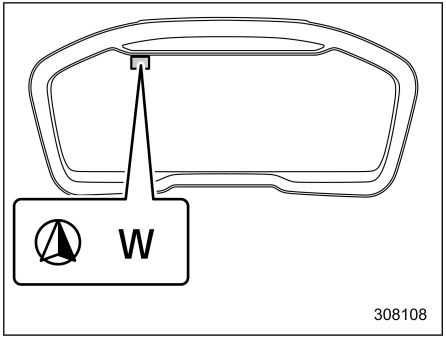

12.3-inch meter display models

The direction of the vehicle is displayed.

▼ Driving range on remaining fuel

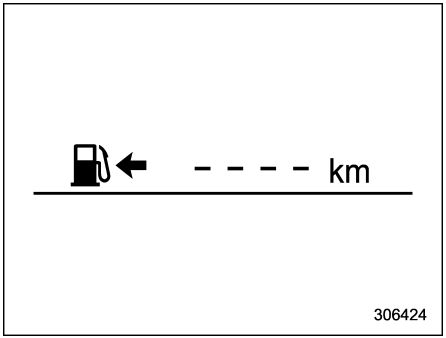

4.2-inch meter display models

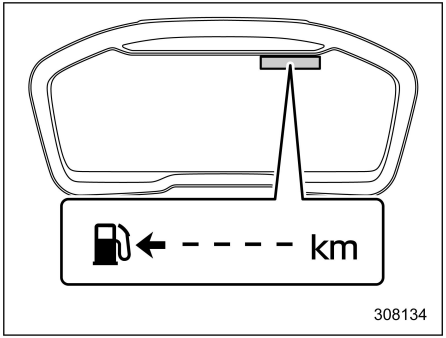

12.3-inch meter display models

NOTE

The driving range on the remaining fuel is only a guide. The indicated value may differ from the actual driving range on the remaining fuel, so you must immediately fill the tank when the low fuel warning light illuminates.

■ Telltale Screen

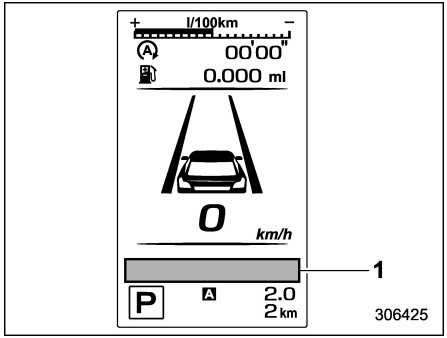

4.2-inch meter display models

1 Telltale screen

– CONTINUED –

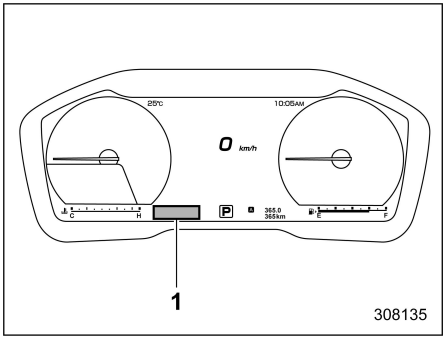

12.3-inch meter display models
1 Telltale screen

When the corresponding situation occurs, the following telltales will be displayed on the telltale screen.

NOTE

- **When there is warning information to display, it will be displayed in five warning indicators, starting on the left in ascending order of severity.**
- **If there are 6 or more warning messages to display, the indicators will be displayed in sequential order.**

Mark	Name	Page
	Door open indicator light	191
	Engine hood open warning light	191
	LED headlight warning light	199
	High beam assist indicator (if equipped)	199
	Adaptive driving beam warning light (yellow) (if equipped)/Adaptive driving beam indicator light (green) (if equipped)	199
SRH OFF	Steering Responsive Headlight OFF indicator light	199
SRH	Steering Responsive Headlight warning light	199
	Engine low oil level warning light	185
AWD	All-Wheel Drive warning light	191
RAB	RAB warning indicator (if equipped)	201

Mark	Name	Page
RAB OFF	RAB OFF indicator (if equipped)	201
	Subaru Rear Vehicle Detection warning indicator (if equipped)	200
OFF	Subaru Rear Vehicle Detection OFF indicator (if equipped)	200
	Automatic headlight beam leveler warning light	199
	Windshield washer fluid warning light	191
	Driver Monitoring System operation indicator light (green) (if equipped)	201
	Driver Monitoring System warning light (yellow) (if equipped)	201
OFF	Driver Monitoring System OFF indicator light (if equipped)	201
	Driver Monitoring System temporary stop indicator light (if equipped)	201
	Icy road surface warning light	201

Mark	Name	Page
	Sonar Audible Alarm OFF indicator (if equipped)	202
	Front Cross Traffic Braking warning indicator (if equipped)	202
OFF	Front Cross Traffic Braking OFF indicator (if equipped)	202
	Hill descent control indicator light	200
	e-BOXER system fail lamp	202
	e-BOXER system overheat warning light	202
EV MODE	EV (Electric Vehicle) drive mode indicator	35
OFF	Pedestrian alert system warning indicator light	202

■ Basic Screens

By operating the ∧ or ∨ switch on the steering wheel, you can change the screen that is always displayed.

Average fuel consumption screen:

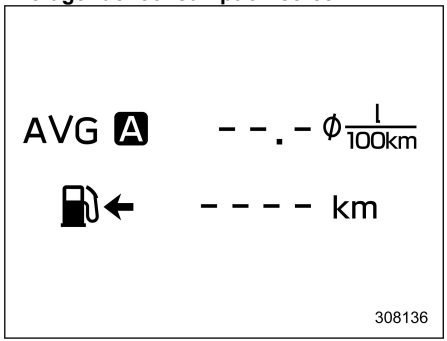

AVG: Average fuel consumption
⛽←: Driving range on remaining fuel

This screen displays the average rate of fuel consumption since the trip meter was last reset.

NOTE

The driving range on the remaining fuel is only a guide. The indicated value may differ from the actual driving range on the remaining fuel, so you must immediately fill the tank when the low fuel warning light illuminates.

Current fuel consumption screen:

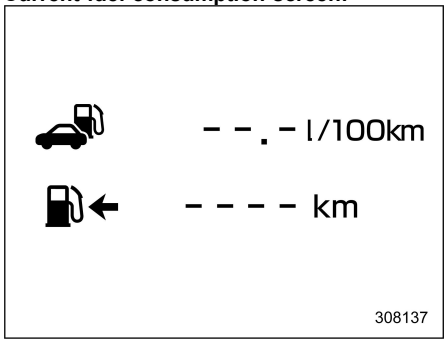

⛽: Current fuel consumption
⛽←: Driving range on remaining fuel

NOTE

The driving range on the remaining fuel is only a guide. The indicated value may differ from the actual driving range on the remaining fuel, so you must immediately fill the tank when the low fuel warning light illuminates.

– CONTINUED –

Driving information screen:

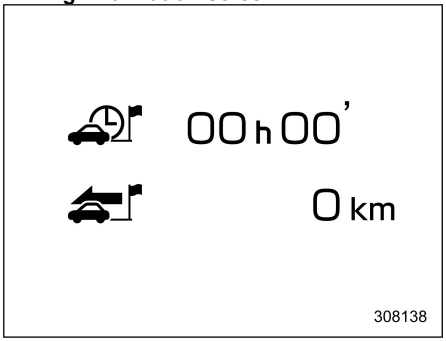

: Journey time
: Journey distance

This screen displays the journey time (the time that has elapsed since the ignition switch was turned to the “ON” position) and journey distance (the distance that has been driven since the ignition switch was turned to the “ON” position).

TPMS screen (if equipped):

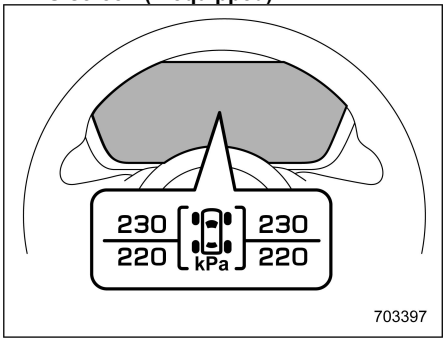

This screen displays each tire pressure.

When a tire is deflated, the deflated tire and the tire pressure will be displayed on the screen in yellow.

NOTE

- **The tire pressure values are displayed several minutes after driving.**
- **Once the tire pressure monitoring system detects the low tire pressure, the tire pressure values will display in yellow until the system detects the normal tire pressure.**
- **Immediately adjust the tire pressure when the warning light illuminates. When the tire pressure monitoring system detects the adjusted tire pressure, the warning light will turn off and the tire pressure values will turn to white.**
- **For the standard tire pressure, see the tire inflation pressure label located on the door pillar on the driver’s side.**

Compass screen (4.2-inch meter display models [if equipped]):

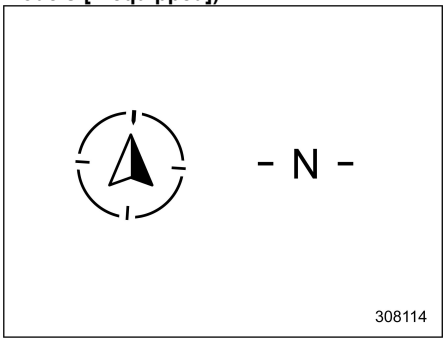

The direction of the vehicle is displayed.

Navigation screen (if equipped):

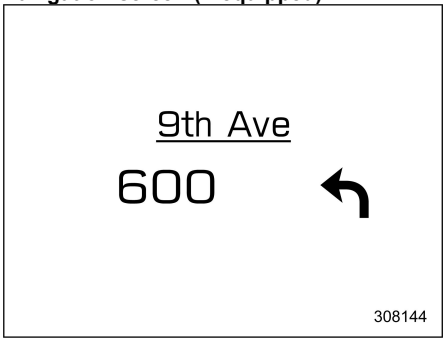

When the route guidance is set in the navigation system, this item shows the navigation route information. For details about the navigation system, refer to the separate navigation/audio Owner's Manual.

Audio screen:

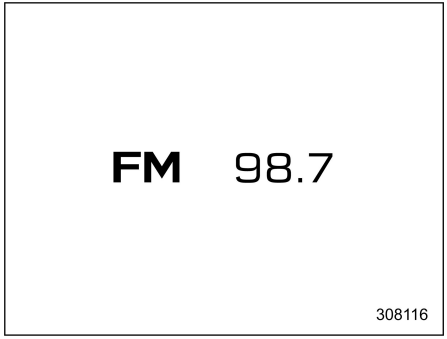

The audio screen shows the status of audio information. For details about the audio system, refer to the separate navigation/audio Owner's Manual.

Clock and outside temperature screen (4.2-inch meter display models):

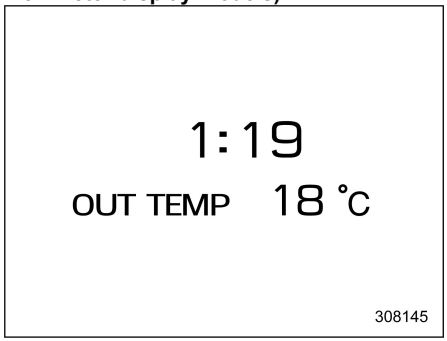

This screen displays the clock and outside temperature. For details about clock setting, refer to "Clock" ☞P241.

NOTE

- **The clock can be displayed in either 12-hour display or 24-hour display. For details, refer to "General settings" ☞P225.**
- **The outside temperature indicator shows the temperature in the area around the sensor. However, the temperature may not be indicated correctly or the update may be delayed in the following conditions.**
  - **While parking or driving at low speeds**

– CONTINUED –

- **When the outside temperature changes suddenly (example: when going in and out of an underground parking area or when passing through a tunnel)**
- **When starting the e-BOXER system after being parked for a certain period of time**

Energy flow screen:

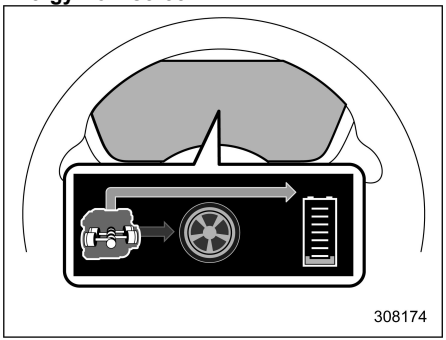

The energy flow screen shows the amount of energy remaining in the high voltage battery as well as the energy flow distributed between the engine, high voltage battery and tires. Power from the engine is displayed in orange, and power from the electric motor is displayed in green. The charging energy flow from the engine and wheels to the high voltage battery is displayed in aqua blue.

■ Digital Speed Screen

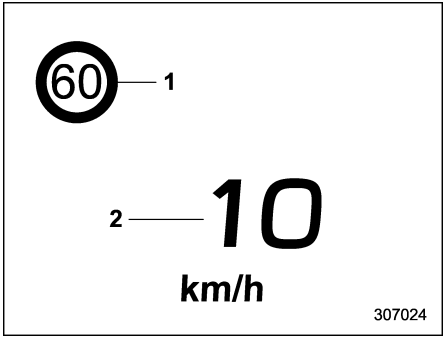

1 Speed limit indicator (if equipped)
2 Vehicle speed

This screen displays the current vehicle speed.

3-7. Center Information Display (CID)

⚠ WARNING

Always pay attention to safe driving when operating the center information display while the vehicle is in motion. When operation of the center information display is disturbing your awareness and ability to concentrate on driving, stop the vehicle in a safe place before performing operations on the display. Also, do not concentrate on the display while driving. Doing so could result in an accident.

■ Features

All information is displayed on the center information display, including vehicle settings, vehicle status, navigation system (if equipped) operation, audio operation, and climate control operation.

Items	Page
Interruption screen	215
Vehicle status and maintenance information	239
Vehicle settings	225
Climate control operations	224
Multi View Monitor (if equipped)/Rear view camera	351/361
Navigation system	Refer to the navigation/audio Owner's Manual.
Audio/telephone	Refer to the navigation/audio Owner's Manual.
EyeSight	Refer to the Owner's Manual supplement for the EyeSight system.

The center information display can also be used to set and initialize the center information display itself.

NOTE

- **When the vehicle is in motion, certain functions and selections may not be available.**
- **The language settings and unit settings (if equipped) for both the center information display and the combination meter display can be changed.**
  For details about language settings, refer to "General settings" ☞P225.
  For details about unit settings (if equipped), refer to "Car settings" ☞P229.
- **When the language has been changed, depending on the language, in rare cases text may not be displayed correctly.**
- **The images displayed in this Owner's Manual are sample images. The actual image may vary depending on the region and vehicle specifications.**

■ Welcome Screen

When the driver's door is opened and closed, the welcome screen will appear for a short time.

NOTE

- **The welcome screen will disappear when the ignition switch is turned to the "ON" position while the welcome screen is shown.**
- **The welcome screen can be turned on or off. For details, refer to "General settings" ☞P225.**
- **For a certain period of time after the welcome screen has once appeared, it may not appear again even when the driver's door is opened and closed. This does not indicate a malfunction.**

■ Good-Bye Screen

The good-bye screen will be displayed under the following conditions.

- The driver's door is opened after the ignition switch is put in the "OFF" position.
- 3 minutes have passed after the ignition switch is put in the "OFF" position with the driver's door closed.
- 10 minutes have passed when the hands-free phone is used after the ignition switch is put in the "OFF" position.
- The battery voltage is low when the ignition switch is put in the "OFF" position.

■ Interruption Screen

Useful messages, such as reminders may interrupt the current screen and appear on the display accompanied by a beep. Take the proper action according to the message.

– CONTINUED –

■ Touch Screen Operations

The center information display has a touch screen. Operations are performed by touching the touch screen directly.

▼ Touch

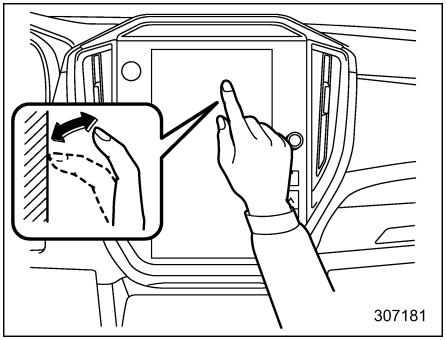

Quickly touch and release once.

▼ Drag

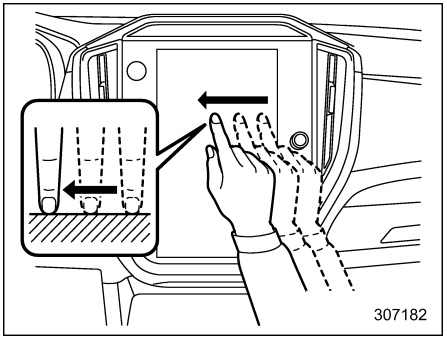

Touch the screen and move the screen to the desired position.

▼ Swipe

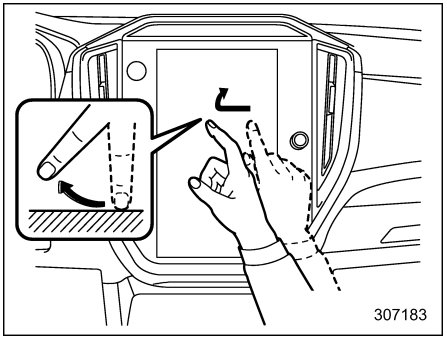

Quickly move the screen by swiping with your finger.

NOTE

Swipe operations may not be performed smoothly in high altitudes.

■ 11.6-Inch Display

▼ Touch screen

Type A

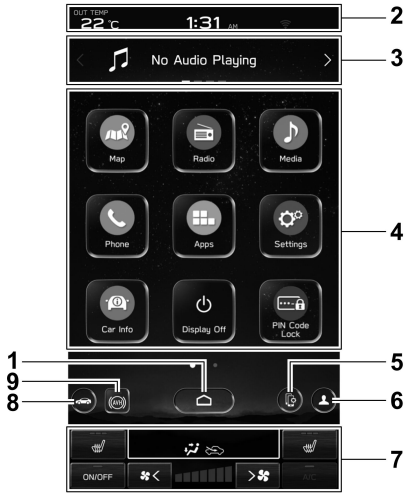

308314

1 HOME icon (Refer to “HOME icon” ☞P224.)
2 Status bar (Refer to “Status bar” ☞P218.)
3 Information bar (Refer to “Information bar” ☞P218.)
4 Main screen (Refer to “Main screen” ☞P225.)
5 Manage devices icon (Refer to “Manage devices icon” ☞P224.)
6 Driver profiles icon (Refer to “Driver profiles icon (type A)” ☞P224.)
7 Climate control screen (Refer to “Climate control screen” ☞P224.)
8 Car settings icon (Refer to “Car settings icon” ☞P221.)
9 Auto Vehicle Hold (AVH) ON/OFF icon (Refer to “Auto Vehicle Hold (AVH) ON/OFF icon” ☞P220.)

Type B

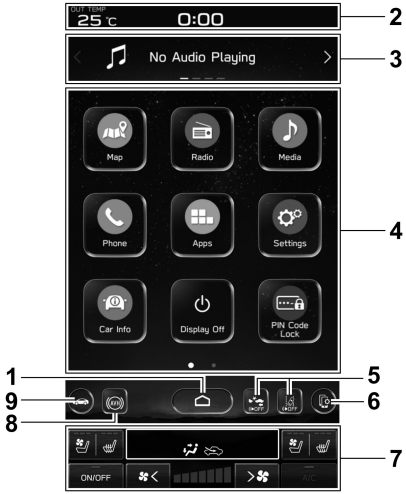

308313

1 HOME icon (Refer to “HOME icon” ☞P224.)
2 Status bar (Refer to “Status bar” ☞P218.)
3 Information bar (Refer to “Information bar” ☞P218.)

– CONTINUED –

4 Main screen (Refer to “Main screen” ☞P225.)
5 EyeSight icons*1
6 Manage devices icon (Refer to “Manage devices icon” ☞P224.)
7 Climate control screen (Refer to “Climate control screen” ☞P224.)
8 Auto Vehicle Hold (AVH) ON/OFF icon (Refer to “Auto Vehicle Hold (AVH) ON/OFF icon” ☞P220.)
9 Car settings icon (Refer to “Car settings icon” ☞P221.)

*1: Refer to the Owner’s Manual supplement for the EyeSight system.

While the ignition switch is in the “ACC” or “ON” position, the touch screen will activate.

▽ Status bar

The outside temperature and clock are displayed on the status bar.

NOTE

- **The outside temperature indicator shows the temperature in the area around the sensor. However, the temperature may not be indicated correctly or the update may be delayed in the following conditions.**
  - **While parking or driving at low speeds**
  - **When the outside temperature changes suddenly (example: when going in and out of an underground parking area or when passing through a tunnel)**
  - **When starting the e-BOXER system after being parked for a certain period of time**
- **The temperature unit cannot be changed.**
- **The clock can be displayed in either 12-hour display or 24-hour display. For details, refer to “General settings” ☞P225.**
- **Touch the clock on the status bar to display the clock setting screen. Refer to “Clock” ☞P241.**
- **For details about Bluetooth device information, refer to the separate navigation/audio Owner’s Manual.**

▽ Information bar

Swipe the information bar or touch < or > on the information bar to switch the item displayed.

Audio screen:

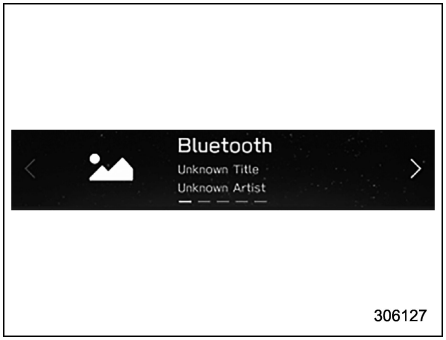

The screen of the currently selected audio source is displayed.

For details about how to use the audio set, refer to the separate navigation/audio Owner’s Manual.

Navigation screen (models with the navigation system):

306170

The directions to the destination are displayed on the screen.

NOTE

When a destination is not set in the navigation system, the compass orientation, street name and speed limit remain displayed on the screen.

Favorite screen:

306835

Favorite screen

This screen displays up to three optional pieces of information that can be selected from the following items.

Item	Details
	Engine coolant temperature
	Engine oil temperature
	Average vehicle speed
	Accelerator opening ratio
	Vehicle posture
	Direction of the vehicle*1
	Posted speed limit of the road you are currently driving on*1
	Calendar
	Driver Monitoring System*1 information and the average fuel consumption of driver
	Nothing is displayed.

*1: If equipped

NOTE

Some items may not be shown depending on the model and specifications.

The items shown on the favorite screen can be changed. For details, refer to “Favourite Widgets” ☞P235.

– CONTINUED –

X-MODE screen:

308094

The X-MODE information is displayed on the screen.

Also, X-MODE can be switched to a different mode on the screen.

▽ Main screen

For details about the following menu, refer to the separate navigation/audio Owner's Manual.

- Radio
- Media
- Phone
- Map
- Apps
- Add Shortcut

▽ Auto Vehicle Hold (AVH) ON/OFF icon

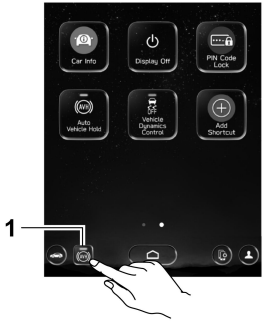

308315

Example: Touch screen (type A)

1 Auto Vehicle Hold (AVH) indicator (green)

Touching "(AVH)" deactivates the Auto Vehicle Hold (AVH) and turns off the Auto Vehicle Hold (AVH) indicator (green) on the screen. Touching "(AVH)" again activates the Auto Vehicle Hold (AVH) and turns on the Auto Vehicle Hold (AVH) indicator (green). Refer to "Auto Vehicle Hold function" ☞P345.

▽ Vehicle Dynamics Control icon

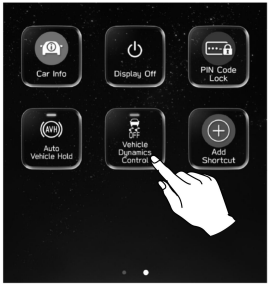

308003

To turn the Vehicle Dynamics Control on and off, touch the "Vehicle Dynamics Control" icon.

When the Vehicle Dynamics Control system is turned off during e-BOXER system operation, the Vehicle Dynamics Control OFF indicator light on the combination meter illuminates.

The Vehicle Dynamics Control system will be deactivated. When "Vehicle Dynamics Control" icon has been touched again to reactivate the Vehicle Dynamics Control system, the Vehicle Dynamics Control OFF indicator light turns off.

Refer to "To Turn On/Off the Vehicle Dynamics Control System" ☞P337.

▽ Display Off

Activation of the display off mode:

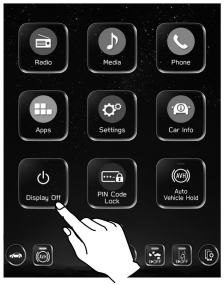

Example: Touch screen (type B)

Touch “Display Off”.

Deactivation of the display off mode:

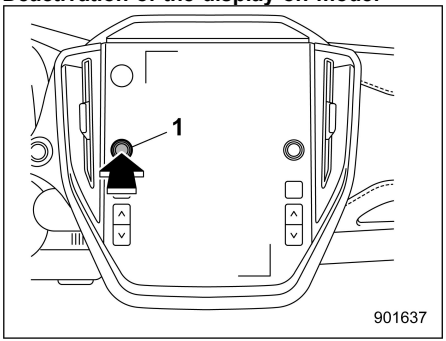

1 Volume knob

Press and hold the volume knob to turn the screen back on.

▽ Car settings icon

Touch to display the items that are changeable while driving.

– CONTINUED –

Item		Available settings	Page reference for the vehicle system operation	Page reference for the setting procedure
1st menu	2nd menu			
Vehicle Control	Vehicle Dynamics Control	ON/OFF	337	234
	X-MODE	Snow/Dirt, Normal, Deep Snow/Mud	339	234
	Cruise Control Acceleration	Eco/Comfort/Standard/Dynamic	*2	—
	Auto Vehicle Hold (AVH)	ON/OFF	345	234
	Steering Responsive Headlights (SRH)	ON/OFF	249	234
Driving Assistance	Pre-Collision Braking	Setting ON/Setting OFF	*2	—
	Forward Collision Warning	Far/Normal/Near		
	Emergency Lane Keeping Assist*1	ON/OFF		
	Lane Departure	All Functions/Lane Departure Prevention Function Only/Warning Buzzer Only/OFF		
	Rear Vehicle Detection (SRVD)*1	ON/OFF	374	234
	Driver Monitoring System*1	ON/OFF	387	234
Speed Assistance*1	Speed Limiter/Cruise Control	Manual/Intelligent	*2	—
	Speed Limit Warning Function	ON/OFF		
	Speed Limit Change Sound	ON/OFF		

Item		Available settings	Page reference for the vehicle system operation	Page reference for the setting procedure
1st menu	2nd menu			
More Settings	Meter Display Mode*4	Normal/Map/EyeSight	206	234
	Meter Map View*4	3D/2D Heading Up/2D North Up	*3	234
	Warning Volume	Min/Mid/Max	372, 385 and *2	—
	Units*1	km, km/h, Litre/Miles, MPH, Gallon	175 and 203	234
	Lane Sway Warning*1	ON/OFF	*2	—

*1: If equipped
*2: For details about the EyeSight system, refer to the Owner's Manual supplement for the EyeSight system.
*3: For details about the audio and navigation system, refer to the Owner's Manual supplement for the audio and navigation system.
*4: 12.3-inch meter display models

– CONTINUED –

▽ Driver profiles icon (type A)

Touch (driver profiles icon) to confirm the driver's information. For details, refer to the separate navigation/audio Owner's Manual.

▽ Driver profiles icon (type B)

307870

Touch "Driver Profiles" icon to confirm the driver's information. For details, refer to the separate navigation/audio Owner's Manual.

▽ Manage devices icon

Touch the manage devices icon to pair your vehicle's system with a device that uses Android Auto, Apple CarPlay, or a similar application. For details, refer to the separate navigation/audio Owner's Manual.

▽ HOME icon

Touch (HOME) to display the top menu.

▽ Climate control screen

The climate control status is shown on the screen.

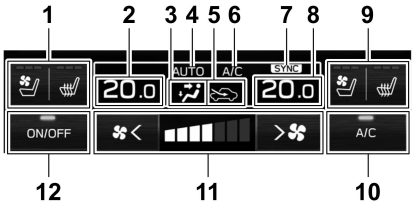

308276

1 Seat heater/ventilation indicator (left-hand side) (if equipped)
2 Set temperature indicator (left-hand side)
3 Airflow mode
4 Climate control mode
5 Air inlet selection
6 Air conditioner ON indicator
7 SYNC mode indicator
8 Set temperature indicator (right-hand side)
9 Seat heater/ventilation indicator (right-hand side) (if equipped)
10 Customizable icon
11 Fan speed control
12 Climate control ON/OFF icon

When operating the climate control system, the main screen switches to the

climate control screen. For details, refer to “Climate Control Panel” ☞P273.

▼ Main screen

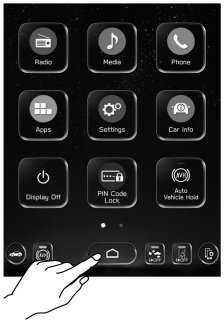

Example: Touch screen (type B)

To display the main screen, touch ⌂ (HOME).

In this Owner’s Manual, the following settings will be explained. For details about other items, refer to the separate navigation/audio Owner’s Manual.

– “Settings” → “General”
– “Settings” → “Car”
– “Car Info”

▽ General settings

Set the time and display general items.

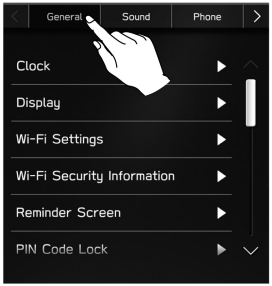

1. Touch ⌂ (HOME).
2. → ⚙ (Settings)
3. → “General”
4. Select the preferred menu.

– CONTINUED –

The setting adjustments to the following items can be manually changed to meet your personal requirements.

Item			Available settings	Page reference for the vehicle system operation	Page reference for the setting procedure
1st menu	2nd menu	3rd menu			
General	Clock	Time Setting*1	AUTO/Manual	241	234
		Time Setting*2	Sync With Phone/Manual		
		Time Zone*3	Display time zone depends on the market		234
		Daylight Saving Time*3	AUTO/ON (+1 hour)/OFF		234
		Clock Format	12H/24H		234
	Display	Display Off	Turn the screen off.	—	234
		Brightness Dial	ON/OFF	178	234
		Brightness/Contrast	Set and adjust the brightness and contrast of the display.	234	234
	Wi-Fi Settings	Wi-Fi	ON/OFF	*4	—
		Connected to:	—		
		Available Wi-Fi Networks	Add		
		Wi-Fi Protected Setup	PIN Setup/Push Button Setup		
		Registered Wi-Fi Networks	—		
	Wi-Fi Security Information*3	Wi-Fi Security Information (AP mode)	—		

Item			Available settings	Page reference for the vehicle system operation	Page reference for the setting procedure
1st menu	2nd menu	3rd menu			
General	Reminder Screen	Maintenance	ON/OFF	215	234
		Birthday	ON/OFF		234
		Anniversary	ON/OFF		234
	PIN Code Lock	Passcode Setting*5	Keyboard: Enter New Passcode	242	242
		Activate PIN Code Lock	Keyboard: Enter Your Passcode		
		Change Passcode	Keyboard: Change Passcode		
	Meter Screen	Gauge Initial Movement	ON/OFF	175	234
		Meter Information Screen*6	OUT TEMP/Clock, Compass*1, Gas Range	208	234
		Meter Information Screen*7	OUT TEMP/Clock, Compass/Gas Range, None	208	234
		Turn by Turn Screen Interruption*3	ON/OFF	*4	234
		Meter Display Mode*7	Normal/Map/EyeSight	206	234
		Meter Map View*7	3D/2D Heading Up/2D North Up	*4	234
	Camera	Rear Camera Delay Control	ON/OFF	362	234
		Steering Angle Lines	ON/OFF	364	234
	Climate Control	Customise Climate Button	A/C/MAX A/C/AUTO/Recirculation/SYNC	277	234
	Language*3	—	Display language depends on the market	203 and 214	234
	Tyre Pressure Units*3	—	kPa/PSi	211	234
	Home Screen Shortcuts	—	ON/OFF	*4	234

– CONTINUED –

Item			Available settings	Page reference for the vehicle system operation	Page reference for the setting procedure
1st menu	2nd menu	3rd menu			
General	Welcome Screen	—	ON/OFF	207	234
	Goodbye Screen	—	ON/OFF	207	234
	Favourite Widgets	—	Set a favorite widget from the list.	218	235
	Birthday List	—	Set a birthday.	235	235
	Anniversary List	—	Set an anniversary day.	236	236
	Periodic Rest Notification*3	—	ON/OFF	*4	—
	Software Update	Update	Check if a new software update		
		Automatically Check for Updates	ON/OFF		
		Automatically Download Updates	ON/OFF		
	Factory Data Reset	—	Reset/Cancel		
	System Information	—	—		
	Free/Open Source Software Information	—	—		

*1: Models with navigation system
*2: Models without navigation system
*3: If equipped
*4: For details about the audio and navigation system, refer to the Owner's Manual supplement for the audio and navigation system.
*5: Displayed until PIN Code Lock is set.
*6: 4.2-inch meter display models
*7: 12.3-inch meter display models

NOTE

Touch ⓘ to display the explanation of the items.

▽ Car settings

Perform the EyeSight system setting and vehicle setting.

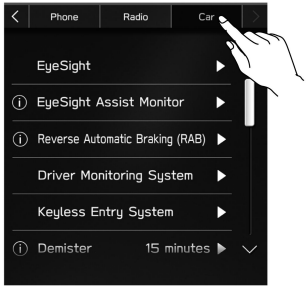

308021

1. Touch (HOME).
2. → (Settings)
3. → “Car”
4. Select the preferred menu.

– CONTINUED –

The setting adjustments to the following items can be manually changed to meet your personal requirements.

Item			Available settings	Page reference for the vehicle system operation	Page reference for the setting procedure
1st menu	2nd menu	3rd menu			
Car	EyeSight	Pre-Collision Braking	Setting ON/Setting OFF	*2	—
		Forward Collision Warning	Far/Normal/Near		
		Emergency Lane Keeping Assist*1	ON/OFF		
		Lane Departure	All Functions/Lane Departure Prevention Function Only/ Warning Buzzer Only/OFF		
		Cruise Control Acceleration	Eco/Comfort/Standard/Dynamic		
		Lead Vehicle Acquisition Sound	ON/OFF		
		Speed Limiter/Cruise Control*1	Manual/Intelligent		
		Traffic Information Advance Warning*1	No Entry, Stop, Yield/Give Way		
		Speed Limit Warning Function*1	ON/OFF		
		Speed Limit Change Sound*1	ON/OFF		
		Lane Sway Warning*1	ON/OFF		
		Lead Vehicle Moving Monitor	ON/OFF		
		Select Drive on Left/Drive on Right	Right Lane/Left Lane		

Item			Available settings	Page reference for the vehicle system operation	Page reference for the setting procedure
1st menu	2nd menu	3rd menu			
Car	EyeSight Assist Monitor*1	Red Indicator	ON/OFF	*2	—
		Yellow Indicator	ON/OFF		
		Green Indicator	ON/OFF		
	Reverse Automatic Braking (RAB)*1	Sonar Audible Alarm	ON/OFF	375	234
		Automatic Braking	ON/OFF		
	Driver Monitoring System*1	Driver Monitoring System	ON/OFF	387	234
		Request Setting Update	ON/OFF		234
		Repeat Facial Scan	OK/Cancel		236
		User Recognition	ON/OFF		234
		Auto Retract Seat on Entry*1	ON/OFF		234
		Register User	Register the user.		236
		Update Seat and Mirror Position*1	Re-register the driver position.		236
		Delete Driver Position*1	Delete the registered driver position.		236
		Delete User	Delete the registered user.		236
		Delete All Users	Delete all registered users.		236

– CONTINUED –

Item			Available settings	Page reference for the vehicle system operation	Page reference for the setting procedure
1st menu	2nd menu	3rd menu			
Car	Keyless Entry System	Hazard Warning Flasher	ON/OFF	141 and 145	234
		Security Relocking*3	20 seconds/30 seconds/40 seconds/50 seconds/60 seconds/OFF	144	234
		Driver Door Unlock*1	Driver Door Only/All	134	234
		Rear Gate/Boot Unlock*1	Rear Gate/Boot Only, All	134	234
	Demister	—	15 minutes/Continuous	263	234
	Interior Light	—	10 seconds/20 seconds/30 seconds/OFF	291	234
	One-Touch Lane Changer	—	ON/OFF	256	234
	Auto Door Lock/Unlock	Auto Door Lock	Vehicle Speed/Shift into or out of PARK*1/OFF	148	234
		Auto Door Unlock	Ignition OFF/Driver Door Open/Shift into or out of PARK*1/OFF		234
	Rear Seat Reminder	—	ON/OFF	78	234
	Door Mirror Setting*1	Auto Electric Folding	ON/OFF	268	234
		Reverse Tilt	ON/OFF	266	234
	Power Rear Gate*1	Power Rear Gate Memory	ON/OFF	163	234
	Vehicle Dynamics Control	—	ON/OFF	337	234
	Auto Vehicle Hold (AVH)	—	ON/OFF	345	234

Item			Available settings	Page reference for the vehicle system operation	Page reference for the setting procedure
1st menu	2nd menu	3rd menu			
Car	Rear Vehicle Detection (SRVD)*1	—	ON/OFF	374	234
	X-MODE	—	Snow/Dirt, Normal, Deep Snow/Mud	339	234
	Steering Responsive Headlights (SRH)	—	ON/OFF	249	234
	Warning Volume	—	Min/Mid/Max	372, 385 and *2	234
	Units*1	—	km, km/h, Litre/Miles, MPH, Gallon	175 and 203	234
	TPMS Mode Setting*1	—	Normal Mode/Loading Mode/ Towing Mode	342	234
	ISA Map Information*1	—	Please check the owner's manual for the country applicable to each area.	*2	—

*1: If equipped
*2: For details about EyeSight system, refer to the Owner's Manual supplement for the EyeSight system.
*3: Models without double locking system

NOTE

Touch ⓘ to display the explanation of the items.

– CONTINUED –

▼ How to select items on the screen

▽ ON/OFF setting

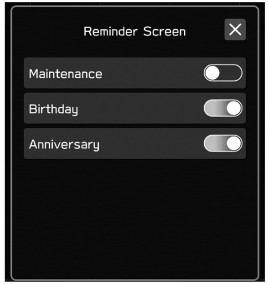

306133

Example

Touch the changing menu and select ON or OFF.

▽ Selecting

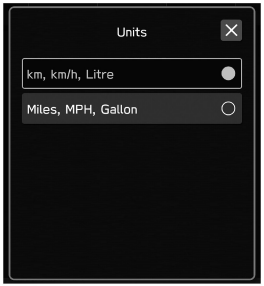

306856

Example

Touch the preferred item.

▼ How to set items on the screen

▽ Brightness/Contrast

Set and adjust the brightness and contrast of the center information display.

NOTE

"Brightness" can only be adjusted when "Brightness Dial" is off. Refer to "General settings" ☞P225.

1. Touch (HOME).
2. → (Settings)
3. → "General"
4. → "Display"
5. → "Brightness/Contrast"

306135

6. Drag ● to adjust the brightness and contrast.

Touch “Default” to revert to the factory setting.

▽ Favourite Widgets

307057

The menu on the favorite screen can be customized.

1. Touch ⌂ (HOME).
2. → ⚙ (Settings)
3. → “General”
4. → “Favourite Widgets”
5. Select the icon of the display position.
6. Select the display item.

▽ Birthday List

If a birthday or anniversary is approaching, a message will be shown when the ignition switch is turned to the “ON” position. This function can be set to on or off by “Reminder Screen”. For details, refer to “General settings” ☞P225.

1. Touch ⌂ (HOME).
2. → ⚙ (Settings)
3. → “General”
4. → “Birthday List”

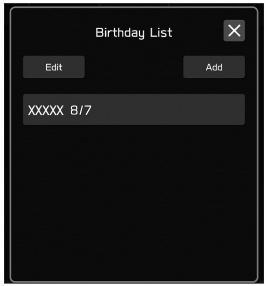

306137

5. → “Add”

306138

6. Enter the name.
7. → “Next”

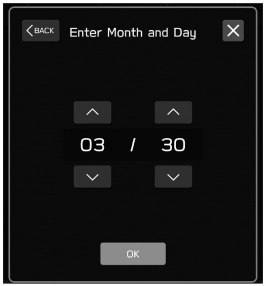

306139

8. Enter the date.
9. → “OK”

– CONTINUED –

NOTE

A maximum of 5 birthdays can be stored.

▽ Anniversary List

The procedure for setting an anniversary is the same as “Birthday List” ☞P235, except that in step 4 “Anniversary List” is selected.

▽ Driver Monitoring System (if equipped)

The Driver Monitoring System settings can be changed.

For setting method for the following menu on the Driver Monitoring System, refer to “ON/OFF setting” ☞P234.

- Driver Monitoring System
- User Recognition
- Auto Retract Seat on Entry

Repeat facial scan:

1. Touch (HOME).
2. → (Settings)
3. → “Car”
4. → “Driver Monitoring System”
5. → “Repeat Facial Scan”

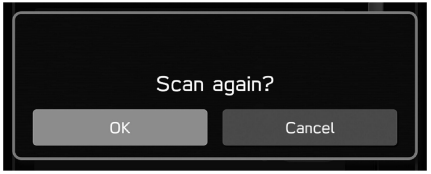

306140

6. → “OK”
7. While seated in the driver’s seat, face forward and wait for a few moments. When the scan is completed, the completion screen is displayed on the center information display.

Register user:

1. Adjust the seat position, outside mirror angle, and reverse tilt-down outside mirror angle so that you are seated in the correct driving posture.

NOTE

If the ignition switch is turned to the “OFF” position before user registration is complete, the information of the adjusted seat position, outside mirror angles, and reverse tilt-down outside mirror angle will not be saved.

2. Touch (HOME).
3. → (Settings)
4. → “Car”
5. → “Driver Monitoring System”
6. → “Register User”

306141

7. Select the preferred user from the list.

306142

8. → “Set”
9. While seated in the driver’s seat, face forward and wait for a few moments.

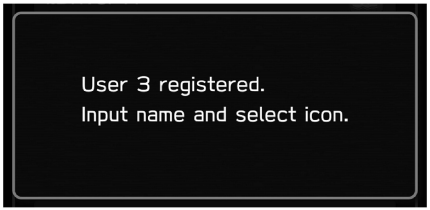

306143

When the screen changes, the registration of the facial scan is completed.

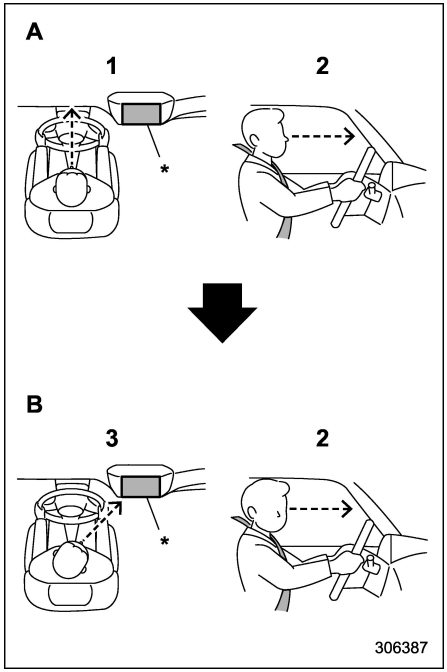

306387

A Forward direction
B Display direction
1 Face forward.
2 Do not lower your chin.
3 Face the display.
*: Display

NOTE

- **If user registration cannot be performed, turn your face forward as shown in the illustration, then turn to the display.**
- **There are some cases where user registration cannot be registered properly. In those cases, refer to “Driver Monitoring System” ☞P387.**
- **If “Unable to register. Try again.” appears, repeat the procedure beginning from step 5.**

306138

10. Enter the name.
11. → “Next”

– CONTINUED –

306144

12. Select the preferred icon.
13. → “Set”

NOTE

- **An existing user can be overwritten by selecting a registered number. When a user is registered by overwriting, the individual fuel economy data is reset.**
- **When “User Recognition” is set to OFF, user registration cannot be selected.**

Update Seat and Mirror Position:

1. Touch (HOME).
2. → (Settings)
3. → “Car”
4. → “Driver Monitoring System”
5. → “Update Seat and Mirror Position”

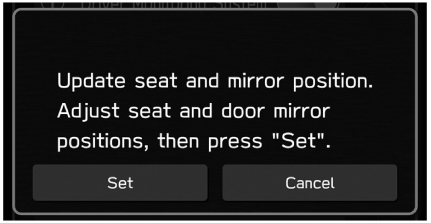

306145

6. → “Set”

NOTE

If the ignition switch is turned to the “OFF” position before user registration is complete, the information of the adjusted seat position, outside mirror angles, and reverse tilt-down outside mirror angle will not be saved.

Delete Driver Position:

1. Touch (HOME).
2. → (Settings)
3. → “Car”
4. → “Driver Monitoring System”
5. → “Delete Driver Position”

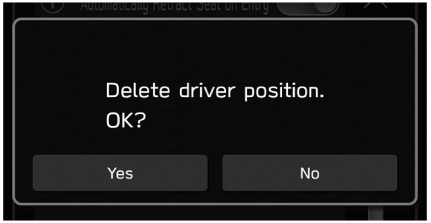

306146

6. → “Yes”

Delete User:

1. Touch (HOME).
2. → (Settings)
3. → “Car”
4. → “Driver Monitoring System”
5. → “Delete User”

306147

6. Select the preferred user from the list.

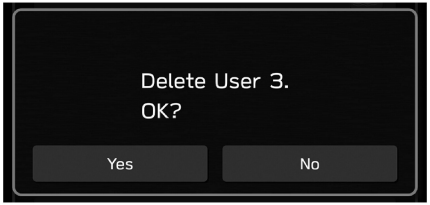

306148

7. → “Yes”

Delete All Users:

1. Touch (HOME).
2. → (Settings)
3. → “Car”
4. → “Driver Monitoring System”
5. → “Delete All Users”

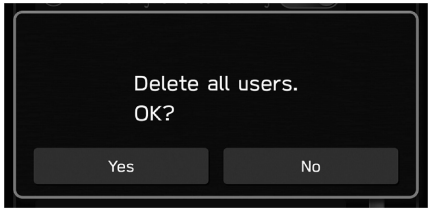

306149

6. → “Yes”

▼ Car information screen

1. Touch (HOME) to display the top menu.

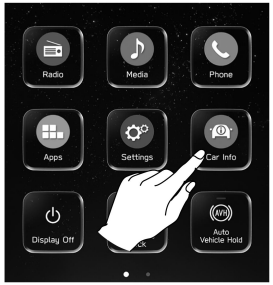

308050

– CONTINUED –

2. → (Car Info)

▽ **Driving Statistics screen**

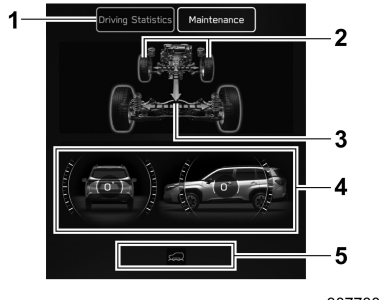

307780

1 Driving Statistics
2 Steering angle
3 Running condition
4 Vehicle posture
5 Telltale screen

This screen displays the driving status of the vehicle and the operation status functions. For functions that are operating, the indicator will illuminate or flash.

NOTE

- **The vehicle posture indication may differ from the actual vehicle posture.**
- **When X-MODE has been turned on, the screen of the center information display will be changed to the X-MODE screen.**
- **The vehicle posture angle varies not only due to the angle of the road surface, but also due to the vehicle tilt caused by the occupants, cargo, and acceleration or deceleration.**

▽ **Maintenance screen**

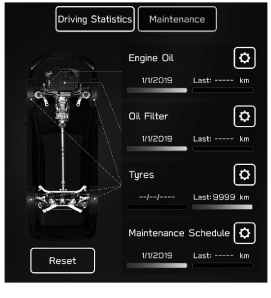

307053

Maintenance reminders can be set.

Engine oil change reminder:

1. Touch “Maintenance” from the 2nd menu in the car info screen.
2. → (Engine Oil)
3. Select “Notification Date” or “Notification Distance” of the reminder.
4. → “Set”
5. → ☒

Oil Filter change reminder:

The setting procedure is the same as the “Engine Oil” reminder, but touch the “Oil Filter” item in step 2.

Tires rotation reminder:

The setting procedure is the same as the “Engine Oil” reminder, but touch the “Tyres” item in step 2.

Maintenance Schedule setting:

The setting procedure is the same as the “Engine Oil” reminder, but touch the “Maintenance Schedule” item in step 2.

NOTE

- **Touch “Reset” to reset each setting.**
- **Touch “Default” to revert to the default value.**

3-8. Clock

For models with a genuine SUBARU navigation and/or audio system, the clock can be adjusted using either auto mode or manual mode.

■ Setting the Clock Manually

1. Turn the ignition switch to the “ON” position.

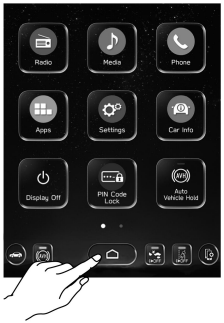

Example: Touch screen (type B)

2. Touch ⌂ (HOME).
3. → ⚙ (Settings)
4. → “General”
5. → “Clock”
6. → “Time Setting”

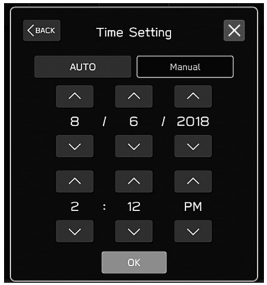

7. → “Manual”
8. → ∧ or ∨
9. → “OK”

NOTE

The clock setting screen can also be displayed by touching the clock on the status bar.

■ Setting the Clock Automatically

1. Turn the ignition switch to the “ON” position.

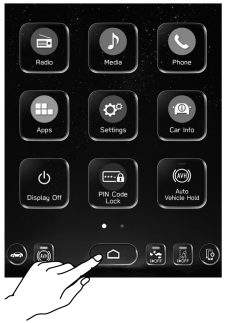

Example: Touch screen (type B)

2. Touch ⌂ (HOME).
3. → ⚙ (Settings)
4. → “General”
5. → “Clock”
6. → “Time Setting”
7. Models with the navigation system:
   → “Auto”
   Models without the navigation system:
   → “Sync With Phone”

– CONTINUED –

▼ **Models with the navigation system**

The clock will be set automatically where a GPS signal is available.

▼ **Models without the navigation system**

The clock will be set and adjusted automatically when a smartphone is connected via Bluetooth® for transferring phonebook data.

1. Register the smartphone to the audio system. For details, refer to “Bluetooth SETTINGS” in the supplemental Owner’s Manual for the audio/navigation system.
2. Transfer phonebook data to the system. For details, refer to “Bluetooth SETTINGS” in the supplemental Owner’s Manual for the audio/navigation system. The clock will be adjusted automatically.

NOTE

Depending on the model of smartphone, the settings of the connected smartphone may need to be changed. (ex: For iOS or other models, notification settings may need to be activated.) For details, check the instructions on connecting smartphones.

■ Time Zone (Models with Navigation System)

You can configure the “Time Zone” setting on the clock setting screen.

If a GPS signal is available when “AUTO” is selected, “Time Zone” is set automatically. Refer to “Main screen” ☞P225 for the setting.

■ Daylight Saving Time (Models with Navigation System)

You can configure the “Daylight Saving Time” setting on the clock setting screen.

If a GPS signal is available when “AUTO” is selected, “Daylight Saving Time” is set automatically. Refer to “Main screen” ☞P225 for the setting.

NOTE

- **When “Time Setting” is set to “AUTO”, you can change “Daylight Saving Time” and “Time Zone” settings.**
- **When “Daylight Saving Time” is set to “AUTO”, the “Time Zone” setting can only be set to “AUTO”.**

3-9. PIN Code Lock

When leaving your vehicle with a valet service, such as at a hotel or restaurant, you can set the PIN Code Lock (valet mode), which disables the navigation, audio, and vehicle setting functions. The display cannot be operated, preventing the leakage of personal information. The PIN Code Lock is designed to help prevent personal information leaks.

■ Activation of PIN Code Lock

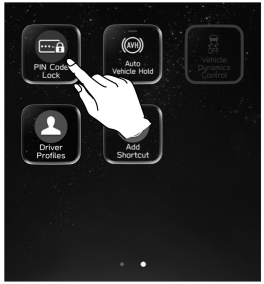

308273

1. Touch “PIN Code Lock”.

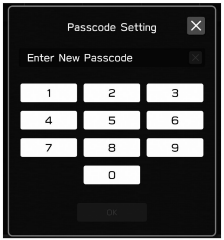

307145

2. Enter the passcode.
3. Touch “OK”.

■ Deactivation of PIN Code Lock

308274

1. Touch “PIN Code Lock” or select OFF ⊂●⊃.
2. Enter the passcode.
3. Touch “OK”.

NOTE

If you enter the passcode incorrectly three times in a row when setting or canceling PIN Code Lock, a message prompting you to contact a SUBARU dealer will be displayed, but it is still possible to enter the passcode even after the fourth attempt.

If you have forgotten your passcode, consult your SUBARU dealer.

3-10. Light Control Switch

⚠ CAUTION

- **Use of any lights for a long period of time while the e-BOXER system is not running can cause the battery to discharge.**
- **Before leaving the vehicle, make sure that the light control switch is turned to the off position. If the vehicle is left unattended for a long time with the light control switch set to a position other than the off position, even though the lights will turn off after 10 minutes, the battery may be discharged.**

The light control switch operates when the push-button ignition switch is in the “ACC” or “ON” position.

Regardless of the position of the light control switch, the illuminated lights are turned off when the push-button ignition switch is turned off.

NOTE

The light control switch can be operated (except AUTO position) even when the push-button ignition switch is

– CONTINUED –

turned to the "OFF" position.

If the driver's door is opened while the headlights are illuminated under such conditions, a chirp sound will inform the driver that the lights are illuminated.

■ Headlights

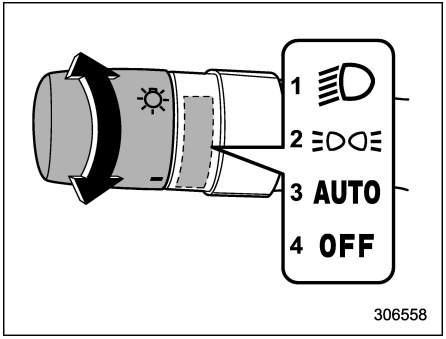

1 Second position
2 First position
3 AUTO position
4 OFF position

To turn on the headlights, turn the knob on the end of the turn signal lever.

Second position:

Headlights, front position lights, instrument panel illumination, tail lights and license plate lights are on.

First position:

Front position lights, instrument panel illumination, tail lights and license plate lights are on.

AUTO position:

When the ignition switch is in the "ON" position, the headlights, front position lights, instrument panel illumination, tail lights and license plate lights are **automatically on or off** depending on the level of the ambient light.

OFF position:

The headlights are all off.

NOTE

- **If the light control switch is in the "AUTO" position and the headlights do not turn on when it becomes dark outside, turn the light switch to the second position. When this happens, we recommend that you have your vehicle inspected by your SUBARU dealer as soon as possible.**
- **The sensitivity of the auto on/off headlights can be changed by your SUBARU dealer. We recommend that you contact your SUBARU dealer for details.**

▼ Auto-on/off wiper-linked headlights

While the light control switch is in the "AUTO" position, the headlights will automatically turn on when the windshield wipers operate several times. The headlights will automatically turn off approximately 1 minute after the wiper stops.

The ON/OFF setting of this function can be changed by a SUBARU dealer. We recommend that you consult your SUBARU dealer for details.

NOTE

The auto-on/off wiper-linked headlights may not operate depending on the level of ambient light.

▼ Headlight off delay setting

The headlight off delay function turns on the headlights, etc. for smooth exiting from the vehicle at night or in a dark place.

NOTE

The factory setting (default setting) of the operation duration of the headlights and the exterior lights is 30 seconds. This setting can be changed to OFF (no operation), 30 seconds, 60 seconds, or 90 seconds at SUBARU dealers. For more details, we recommend that you contact a SUBARU dealer.

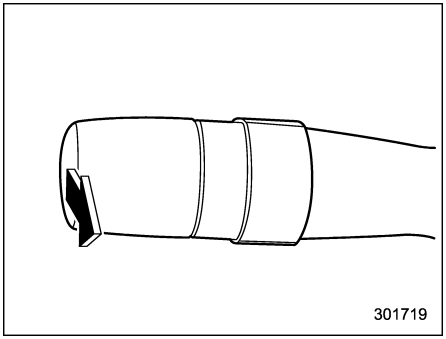

When the ignition switch is turned off and the light control switch is in the “AUTO” or “OFF” position, if you pull the turn signal lever toward you, the headlight low beams and some exterior lights will illuminate as follows.

- Illuminates for 30 seconds after the driver’s door is closed.
- Illuminates until you press the lock button on the access key fob two times successively.
- Illuminates until you touch the door lock sensor on the door handle two times successively.

NOTE

While the headlight off delay function is operating, if you perform any of the following operations, the headlights and exterior lights will turn off.

- **Turn the ignition switch to the “ON” position.**
- **Pull the turn signal lever toward you.**
- **Set the light control switch to a position other than the “AUTO” or “OFF” position.**

▼ Battery drainage reduction function

When you turn off the push-button ignition switch while the headlights are on, the battery drainage reduction function activates and performs the following operations to reduce the risk of battery discharge.

- The headlights turn off automatically after 10 minutes.
- When you open or close the door or operate the light control switch, the headlights will turn off automatically 10 minutes later.

NOTE

- **When you leave the vehicle, put the light control switch in the “OFF” position to prevent battery discharge.**
- **When you open or close the door or operate the light control switch after the headlights turn off automatically, the headlights will turn on again.**
- **If the driver’s door is not opened and closed, these lights will turn off in 3 minutes.**

▼ Sensor for the auto on/off headlights (rain/light solar radiation and humidity sensor)

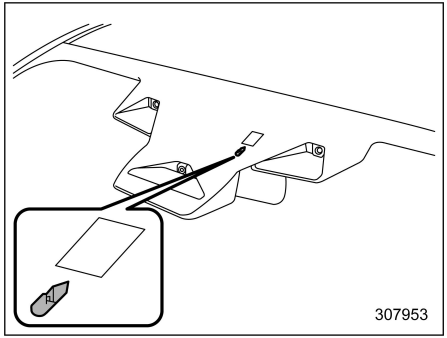

The sensor is on the windshield glass as shown in the illustration.

⚠ CAUTION

If any object is attached on or near the sensor, the sensor may not detect the level of ambient light correctly and the auto on/off headlights may not operate properly.

– CONTINUED –

■ High/Low Beam Change (Dimmer)

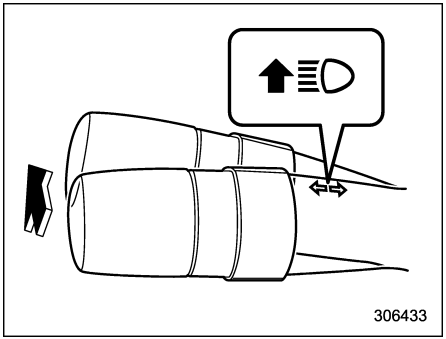

While the light control switch is in the "≣D" or "AUTO" position in a dark place, the headlights will turn on.

Pushing the lever forward and releasing it will activate the high beam. Pulling the lever rearward and releasing it will switch the headlights to low beam.

For models with the High Beam Assist, when the light control switch is in the "AUTO" position, pushing the lever forward turns the High Beam Assist is on.

Refer to "High Beam Assist Function" ☞P246.

When the headlights are on high beam, the high beam indicator light "≣●" on the combination meter also on.

■ Headlight Flasher

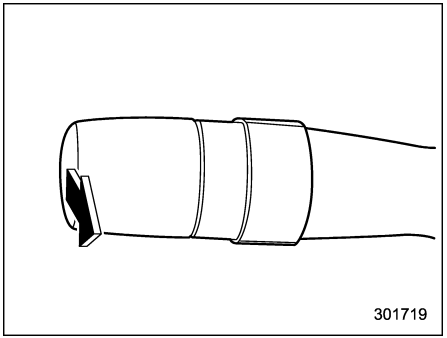

⚠ CAUTION

Do not hold the lever in the flashing position for more than just a few seconds.

To flash the headlights, pull the lever toward you and then release it. The high beam will stay on for as long as you hold the lever. The headlight flasher works even though the lighting switch is in the off position.

When the headlights are on high beam, the high beam indicator light "≣●" on the combination meter also illuminates.

■ High Beam Assist Function (If Equipped)

NOTE

- **Do not overestimate the capacity of the high beam assist function. The driver always has the responsibility to understand the surrounding situation, to drive safely, and to change the headlight mode manually if necessary.**
- **The factory setting (default setting) for this function is set as "operational". This setting can be changed to OFF (non-operation) at SUBARU dealers. For more details, we recommend that you contact a SUBARU dealer.**
- **The preset vehicle speed varies depending on the models.**
- **The high beam assist function utilizes the stereo camera installed at the position of the upper side of windshield.**
- **For details on how to handle the stereo camera, refer to the Owner's Manual supplement for the EyeSight system.**

The high beam assist function automatically changes the headlight from high beam to low beam (or vice versa).

When all of the following conditions are met, the headlight will change to high beam.

- When the vehicle speed increases to or above the preset level.
- There is no preceding or oncoming vehicle.
- The forward area of the vehicle is dark.
- The road does not have a sharp curve.

When any of the following conditions are met, the headlight will change to low beam.

- When the vehicle speed decreases to or below the preset level.
- When the forward area of the vehicle is bright.
- When there is a preceding or oncoming vehicle.
- When the EyeSight system is malfunctioning or is temporarily stopped.

▼ How to use the high beam assist function

The high beam assist function will be activated when all the following conditions are met.

- The light control switch is in the “AUTO” position and the low beam headlights are on automatically.
- The turn signal lever is pushed forward.

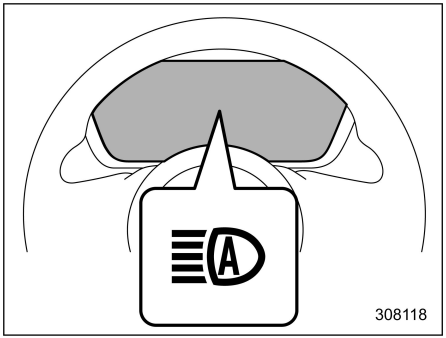

High beam assist indicator

When the high beam assist function is activated, the high beam assist indicator on the combination meter will illuminate.

NOTE

If the high beam assist function is malfunctioning or is temporarily stopped, the headlight will be fixed at low beam.

▼ How to change the headlight mode manually

Change to the low beam:

- Set the light control switch to “≡D”.
- Pull the lever while the high beam is turning on and release it.

Change to the high beam:

Push the lever forward and release it.

At this time, the high beam assist function will turn off, the high beam assist indicator will turn off and the high beam indicator light will turn on.

NOTE

- **After manually changing the headlight mode to the high beam, if you turn on the high beam assist function, push the lever forward and release it.**
- **When manually changing the headlight mode to the high beam, if you turn the light control switch to the “≡DOE” position, the parking lights, tail lights and license plate lights will turn on.**

▼ Tips for the high beam assist system

- The high beam assist function recognizes the condition surrounding the vehicle based on the brightness of illumination ahead of your vehicle, etc. Therefore, the headlight mode may switch in some situations that do not match to the driver’s sense.
- A bicycle or cargo cycle may not be detected.

– CONTINUED –

- Under the following situations, the brightness of ambient illumination may not be detected correctly and the high beam assist function may not work properly. As a result, the glare of the high beam may disturb the oncoming vehicle or vehicle ahead. Also, the low beam mode may continue although there are no oncoming vehicles and vehicles ahead. In the such cases, change the headlight mode manually.
  - In bad weather (fog, snow, sand storm, heavy rain, etc.).
  - When the windshield glass is dirty or fogged.
  - When the windshield is cracked or damaged.
  - If there are lights similar to the headlights or the tail lights in the surrounding area.
  - When an oncoming vehicle or vehicle ahead is driven without its headlights and tail lights on.
  - If the headlights of an oncoming vehicle or the tail lights of a vehicle ahead are dirty or discolored, or if the light beams are not aimed correctly.
  - When a rapid change of brightness continues while driving.
  - When driving on a road with many ups and downs or uneven surfaces.
  - When driving on a road with many curves.
  - When there are some objects that reflect light strongly, such as a road sign or a mirror in vehicle ahead.
  - When the rear part of the vehicle ahead, such as a container, reflects light strongly.
  - When the headlights of your vehicle are damaged or dirty.
  - When your vehicle is tilted, such as in case the vehicle has a flat tire or is being towed.
  - When the stereo camera is deformed or the stereo camera lenses are dirty.
  - Immediately after the e-BOXER system has started.
- In the following conditions, the headlight mode will not be automatically changed from the high beam to the low beam.
  - When your vehicle passes an oncoming vehicle suddenly in a blind curve.
  - When another vehicle passes in front of your vehicle.
  - When an oncoming vehicle or vehicle ahead comes in and out of view because of continuous curves, median strips, roadside trees, etc.
- If the stereo camera detects the light of the front fog lights of an oncoming vehicle, the headlight mode may change from the high beam to the low beam automatically.
- The headlight mode may change from the high beam to the low beam, or the low beam mode may continue, when affected by a street light, traffic signal, illumination of an advertisement board, or a reflective object such as a road sign and signboard.
- The timing of the change of headlight mode may differ due to the following factors.
  - Color or brightness of the headlights of an oncoming vehicle or the tail lights of a vehicle ahead.
  - The headlights of the oncoming vehicle or the tail lights of the vehicle ahead are covered with mud, snow, etc.
  - Movement and direction of an oncoming vehicle or a vehicle ahead.
  - When the headlights of an oncoming vehicle or the tail lights of a vehicle ahead illuminate on only one side.
  - When the oncoming vehicle or vehicle ahead is a motorcycle.
  - Conditions of a road (slope, curve, road surface, etc.).

– Number of passengers and weight of loaded cargo.
– Limitation of the detection ability of the stereo camera.

■ Daytime Running Light System

⚠ WARNING

When the daytime running lights are illuminated, the tail lights do not illuminate. When it becomes dark outside, turn the light switch to the "⇶" position to illuminate the headlights and tail lights. This will improve visibility and allow other drivers to see your vehicle more easily.

The daytime running lights will automatically illuminate when the following conditions are fulfilled.

- The e-BOXER system is running.
- The parking brake is fully released.
- The light control switch is in the "AUTO" or OFF position.

NOTE

- **If the parking brake is applied when you start the e-BOXER system, the daytime running light will illuminate when the parking brake is released.**
- **When the headlight switch is in the "≡DC≡" or "⇶" position, the daytime running light system is deactivated.**
- **While the headlight switch is in the "AUTO" position and the headlights turn on automatically, the daytime running light is deactivated.**

3-11. Steering Responsive Headlight (SRH)

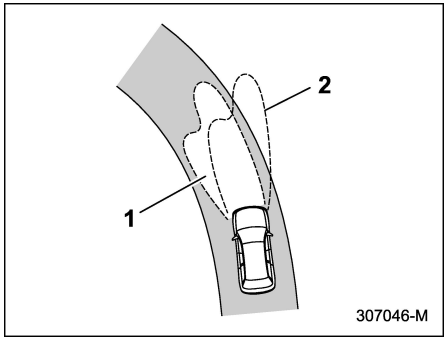

1 The target area of illumination when SRH is activated
2 The target area of illumination when SRH is not activated

SRH is a function that automatically moves the headlight beam to the left or right in accordance with the steering angle and vehicle speed. This function helps to improve the visibility at night by illuminating the road ahead at corners and intersections.

You can turn the SRH function on or off. The settings can be changed by using the center information display. For details, refer to "Car settings" ☞P229.

– CONTINUED –

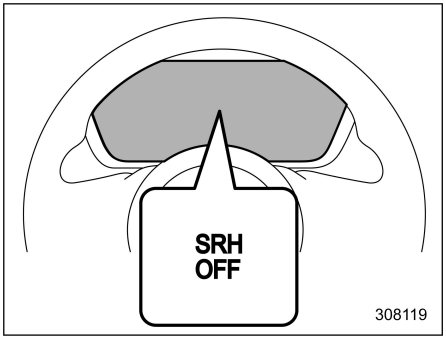

Steering Responsive Headlight OFF indicator light

The Steering Responsive Headlight OFF indicator light on the combination meter turns off when SRH is turned on.

The Steering Responsive Headlight OFF indicator light on the combination meter illuminates when SRH is turned off.

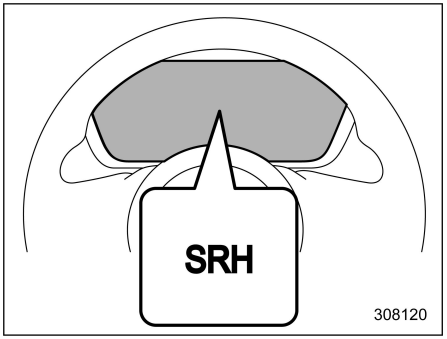

Steering Responsive Headlight warning light

If SRH is malfunctioning, the Steering Responsive Headlight warning light on the combination meter illuminates and a message appears on the warning screen when the ignition switch is in the “ON” position. It indicates that SRH has been deactivated. We recommend that you contact a SUBARU dealer for an inspection.

NOTE

- **The SRH function operative/non-operative status is kept when the e-BOXER system is turned off, even if the e-BOXER system is restarted.**
- **SRH only activates when the vehicle is traveling forward at the speed of approximately 8 km/h (5 mph) or more.**

3-12. Adaptive Driving Beam (ADB) (If Equipped)

WARNING

Do not rely solely on the ADB function. Always operate the light control switch depending on the environment. Using the stereo camera installed at the upper positions on the windshield, ADB recognizes oncoming vehicles and vehicles in front to adjust the lighting area. This is to get the best view to avoid dazzling oncoming vehicles and vehicles in front, and to light only the area where no vehicles are in front or oncoming.

NOTE

- **ADB utilizes the stereo camera installed at the position of the upper side of windshield.**
- **For details on how to handle the stereo camera, refer to the Owner's Manual supplement for the EyeSight system.**
- **The factory setting (default setting) for this function is set as "operational". This setting can be changed to OFF (non-operation) at SUBARU dealers.**
- **The preset vehicle speed varies depending on the models.**

■ How to Use the ADB Function

ADB will be activated when all the following conditions are met.

- The light control switch is in the "AUTO" position and the low beam headlights are on automatically.
- The turn signal lever is pushed forward.

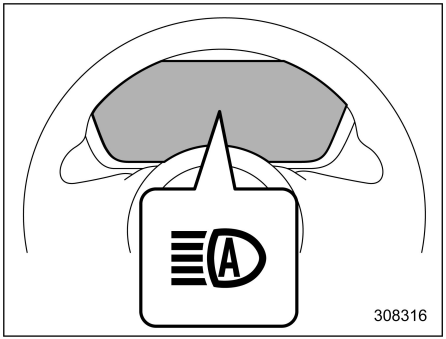

Adaptive driving beam indicator light

When the ADB function is activated, the Adaptive driving beam indicator light on the combination meter will illuminate.

NOTE

- **If the EyeSight system is malfunctioning or is temporarily stopped, the headlights will switch to the low beam without using the ADB function.**
- **While ADB is operating, if driving on low beam for more than 100 km/h (62 mph), the lighting reaches more long distance than normal usage of the low beam.**

■ How to Change the Headlight Mode Manually

Change to the low beam:

- Set the light control switch to "".
- Pull the lever while the high beam is turning on and release it.

Change to the high beam:

Push the lever forward and release it.

NOTE

- **After manually changing the headlight mode to the high beam, if you turn on the ADB function, return the light control switch to the "AUTO" position.**

– CONTINUED –

- **When manually changing the headlight mode to the high beam, if you turn the light control switch to the "≡DO≡" position, the instrument panel illumination, parking lights, tail lights and license plate lights will be on.**

■ Automatic Switching Condition among the High Beam, Low Beam, and ADB

Conditions to switch to high beam

- When the vehicle speed increases to or above the preset level.
- When the front of the vehicles are dark, because there are no vehicles in front and oncoming, or vehicles are driving without lighting.
- The curve is not sharp.

Conditions to switch to low beam

- When the vehicle speed decreases to or below the preset level.
- When the front of the vehicle is bright because driving under the street lights, or driving in the city.
- The EyeSight system is malfunctioning or temporarily stopped.

Conditions to switch to ADB

- When the vehicle speed increases to or above the preset level.
- Vehicles oncoming and in front turn on the headlights.
- Front of the vehicle is dark.
- There are no oncoming vehicles for a certain time when high speed driving.

■ Tips for ADB

- The ADB function recognizes the condition surrounding the vehicle based on the brightness of illumination ahead of your vehicle, etc. Therefore, the headlight mode may switch in some situations that do not match to the driver's sense.
- If the EyeSight system is malfunctioning or is temporarily stopped, push the lever forward while the light control switch is in the "AUTO" position to switch to the high beam.
- A bicycle or cargo cycle may not be detected.
- Under the following situations, the brightness of ambient illumination may not be detected correctly and the ADB function may not work properly. As a result, the glare of the high beam may disturb the driving of an oncoming vehicle or vehicle ahead. Also, the low beam mode may continue although there are no oncoming vehicles or vehicles ahead. In such cases, change the headlight mode manually.
  - In bad weather (fog, snow, sand storm, heavy rain, etc.)
  - When the windshield glass is dirty or fogged.
  - When the windshield is cracked or damaged.
  - When the stereo camera is deformed or the stereo camera lenses are dirty.
  - If there are lights similar to the headlights or the tail lights in the surrounding area.
  - When an oncoming vehicle or vehicle ahead is driven without its headlights and tail lights on.
  - If the headlights of an oncoming vehicle or the tail lights of a vehicle ahead are dirty or discolored, or if the light beams are not aimed correctly.
  - When a rapid change of brightness continues while driving.
  - When driving on a road with many ups and downs or uneven surfaces
  - When driving on a road with many curves
  - When there are some objects that reflect light strongly, such as a road sign or a mirror in the vehicle ahead.
  - When the rear part of the vehicle

ahead, such as a container, reflects light strongly.
  - When the headlights of your vehicle are damaged or dirty.
  - When your vehicle is tilted, such as in case the vehicle has a flat tire or is being towed.
  - Immediately after the engine has started.
- Under the following conditions, ADB may not operate properly.
  - When your vehicle passes an oncoming vehicle suddenly in a blind curve.
  - When another vehicle passes in front of your vehicle.
  - When an oncoming vehicle or vehicle ahead comes in and out of view because of continuous curves, median strips, roadside trees, etc.
- If the stereo camera detects the light of the front fog lights of an oncoming vehicle, ADB may not operate properly.
- ADB may not operate when affected by street lights, traffic signals, illumination of advertisement boards, or reflective objects such as road signs or signboards.
- Under the following conditions, ADB may not operate properly.
  - Color or brightness of the headlights of an oncoming vehicle or the tail lights of a vehicle ahead
  - The headlights of the oncoming vehicle or the tail lights of the vehicle ahead are covered with mud, snow, etc.
  - Movement and direction of an oncoming vehicle or a vehicle ahead
  - When the headlights of an oncoming vehicle or the tail lights of a vehicle ahead illuminate on only one side.
  - When the oncoming vehicle or vehicle ahead is a motorcycle.
  - Conditions of a road (slope, curve, road surface, etc.)
  - Number of passengers and weight of loaded cargo
  - Limitation of the detection ability of the stereo camera
  - If the EyeSight traffic lane customization is not set to the actual direction of traffic.

3-13. Cornering Lamps

The cornering lamps illuminate areas diagonally opposite the front of the vehicle when you are turning or parked. The lamp allows you to more easily see approaching pedestrians and bicycles.

The cornering lamps are lit when the headlights are on, under the following conditions:

- The vehicle is turning left or right at a speed of approximately 35 km/h (22 mph) or less while the turn signal lever is operating in the direction of travel.
- The vehicle is backing up.

The light turns off when you complete a turn or finish parking the vehicle.

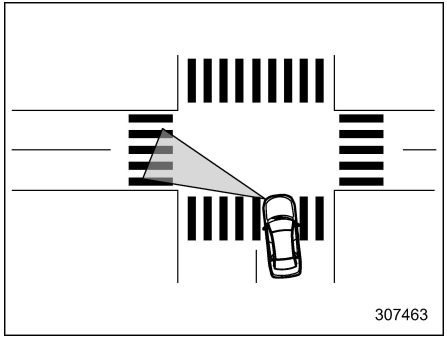

3-14. Headlight Beam Leveler

The LED headlights generate more light than conventional halogen headlights.

Therefore a driver of an oncoming vehicle may experience too much glare when your headlight beam height adjustment is high when the vehicle is carrying a heavy load.

The automatic headlight beam leveler adjusts the headlight beam height automatically and optimally according to the load being carried by the vehicle.

⚠ CAUTION

In certain circumstances, the headlights may become misaligned, and the headlight beam leveler will not reset them to the proper angle. This may occur after transporting your vehicle on a flat-bed truck, or if the vehicle is parked and restarted on different angles. In such cases, we recommend that you have the headlight alignment checked by a SUBARU dealer.

3-15. Fog Light Switch

■ Front Fog Light Switch

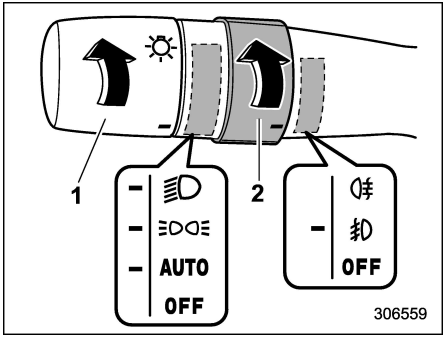

Front fog light operating condition
1 Headlight switch
2 Fog light switch

The front fog lights will turn on when the fog light switch is placed in the "" position while the headlights are in either of the following conditions.

- The headlight switch is in the "" or "" position.
- The headlight switch is in the "AUTO" position and the headlights turn on automatically.

To turn off the front fog lights, turn the switch back down to the "OFF" position.

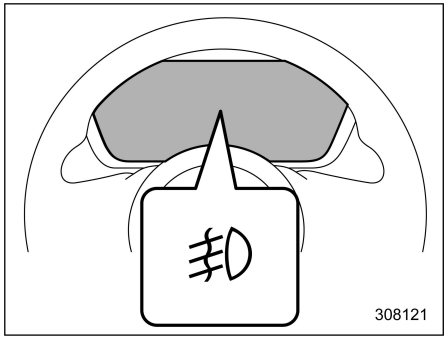

Front fog light indicator light

The indicator light located on the combination meter will illuminate when the front fog lights are on.

Rear Fog Light Switch (If Equipped)

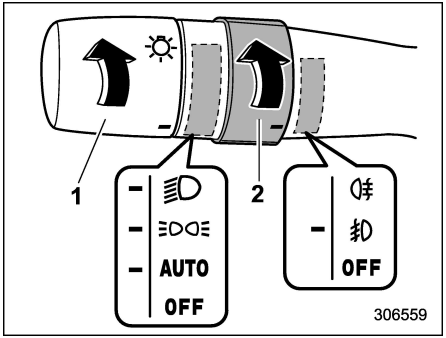

Rear fog light operating condition
1 Headlight switch
2 Fog light switch

The rear fog light will turn on when the fog light switch is turned to the "⁐" position while the headlights are in either of the following conditions.

- The headlight switch is in the "≡DOE" or "≡D" position.
- The headlight switch is in the "AUTO" position and the headlights turn on automatically.

The switch will return to the "≡D" position when released.

To turn off the rear fog light, perform either of the following procedures.

- Turn the fog light switch upward back to the "⁐" position again.
- Turn the fog light switch downward to the "OFF" position.

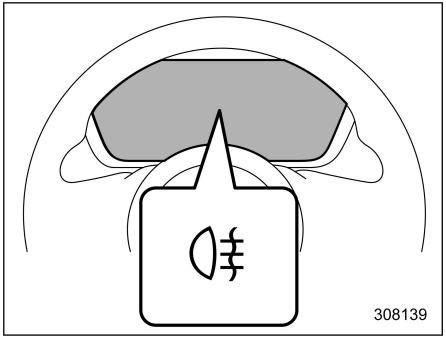

Rear fog light indicator light

The indicator light on the combination meter will illuminate when the rear fog light is illuminated.

NOTE

To prevent switching off the rear fog light from being forgotten, the rear fog light circuit is designed so that it turns off whenever one of the following operations is performed.

- **The headlight switch is set to the OFF position.**
- **The headlight switch is set to the "AUTO" position and the headlights turn off.**
- **The push-button ignition switch is turned off.**

However, this does not mean that the rear fog light illuminates when the headlight switch is set to the "≡D" position or the ignition switch is turned to the "ON" position again. So, if you want to reilluminate the rear fog light, turn the fog light switch to the "⁐" position.

3-16. Turn Signal Lever

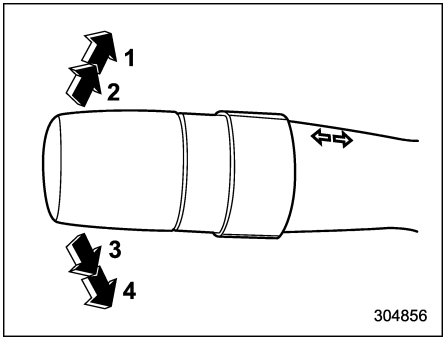

1 Right turn
2 Lane change right signal
3 Lane change left signal
4 Left turn

To activate the right turn signal, push the turn signal lever up. To activate the left turn signal, push the turn signal lever down. When the turn is finished, the lever will return automatically. If the lever does not return after cornering, return the lever to the neutral position by hand.

To signal a lane change, push the turn signal lever up or down slightly and hold it during the lane change. The turn signal indicator lights will flash in the direction of the turn or lane change.

NOTE

For models with a turn signal lever on the right side of the steering wheel, the pushing direction of the turn signal lever is the opposite of that described here.

■ One-Touch Lane Changer

To flash the turn signal and turn signal indicator light three times, push the turn signal lever up or down slightly and immediately release it.

NOTE

The operational/non-operational setting of the one-touch lane changer can be changed by a SUBARU dealer. We recommend that you contact the nearest SUBARU dealer for details. The setting can also be changed by operating the center information display. For details, refer to "Car settings" ☞P229.

3-17. Wiper and Washer

⚠ WARNING

In freezing weather, do not use the windshield washer until the windshield is sufficiently warmed by the defroster.

Otherwise the washer fluid can freeze on the windshield, blocking your view.

⚠ CAUTION

- **Do not operate the washer continuously for more than 10 seconds, or when the washer fluid tank is empty. This may cause overheating of the washer motor. Check the washer fluid level frequently, such as at fuel stops.**
- **Do not operate the wipers when the windshield or rear window is dry. This may scratch the glass, damage the blade rubbers and might cause the wiper motor to fail. Before operating the wiper on a dry windshield or rear window, always use the windshield washer.**

- In freezing weather, be sure that the blade rubbers are not frozen to the windshield or rear window before switching on the wipers. Attempting to operate the wiper with the blade rubbers frozen to the window glass could cause not only the blade rubbers to be damaged but also might cause the wiper motor to fail. If the blade rubbers are frozen to the window glass, be sure to operate the defroster, windshield wiper deicer (if equipped) or rear window defogger before turning on the wiper.
- If the wipers stop during operation because of ice or some other obstruction on the window, this might cause the wiper motor to fail even if the wiper switch is turned off. If this occurs, promptly stop the vehicle in a safe location, turn the ignition switch to the "OFF" position and clean the window glass to allow proper wiper operation.
- Use clean water if windshield washer fluid is unavailable. In areas where water freezes in winter, use SUBARU Windshield Washer Fluid or the equivalent. Refer to "Windshield Washer Fluid" ☞P501.

  Also, when driving the vehicle when there are freezing temperatures, use non-freezing type wiper blades.
- Do not clean the wiper blades with fuel or a solvent, such as paint thinner or benzine. This will cause deterioration of the wiper blades.
- When the wiper switch is in the "AUTO" position, do not touch the windshield near the rain/light solar radiation and humidity sensor and do not place a wet cloth on the windshield near the rain/light solar radiation and humidity sensor. Doing so may result in unexpected wiper operation and cause injury.
- When washing the vehicle, make sure that the wiper is turned off. Otherwise, the wipers may operate unexpectedly and cause injury.
- When having your vehicle washed in an automatic car wash, make sure that the wiper is turned off. Otherwise, the wipers may be damaged because they may operate unexpectedly and car wash brushes could become tangled around them.

NOTE

- The windshield wiper motor is protected against overloads by a circuit breaker. If the motor operates continuously under an unusually heavy load, the circuit breaker may trip to stop the motor temporarily. If this happens, park your vehicle in a safe location, turn off the wiper switch, and wait for approximately 10 minutes. The circuit breaker will reset itself, and the wipers will again operate normally.
- Clean your blade rubbers and window glass periodically with a washer solution to prevent streaking, and to remove accumulations of road salt or road film. Operate the windshield washer for at least 1 second so that washer solution will be sprinkled all over the windshield or rear window.
- Grease, wax, insects, or other material on the windshield or the wiper blade results in jerky wiper operation and streaking on the glass. If you cannot remove the streaks after operating the windshield washer or if the wiper operation is jerky, clean

– CONTINUED –

the outer surface of the windshield and rear window using a sponge or soft cloth with a neutral detergent or mild-abrasive cleaner. Do not, however, use detergent to clean the blade rubbers. Use only a sponge or soft cloth (and no neutral detergent or mild abrasive cleaner) when you clean the blade rubbers. If you wipe the rubber of the blade strongly, the black coating component will peel off, which will cause the wiper to judder. Also, after wiping it off, check that the rubber has not come loose. After cleaning the window glass and wiper blade rubbers, be sure to rinse them with clean water. Rinse the window until the water does not form beads on the glass. This indicates that the glass is clean.

- If you cannot eliminate the streaking even after following this procedure, replace the wiper blades (or blade rubbers) with new ones. For replacement instructions, refer to "Replacement of Wiper Blades" ☞P502.
- When the wiper switch is turned to the "AUTO" position while the ignition switch is in the "ON" position, the wipers will operate once. This indicates that the wiper switch is in the "AUTO" position.
- When the wiper switch is in the "AUTO" position, the following situations may occur.
  - The wipers may operate if the rain/light solar radiation and humidity sensor or the windshield is vibrated or objects such as insects, dirt, mud, etc. are covering them. Turn off the wiper unless it is raining or snowing.
  - The wipers do not operate if the rain/light solar radiation and humidity sensor does not detect rain or snow. If necessary, push the wiper control lever down to the low speed position or high speed position.
  - The wipers may not operate properly if the rain/light solar radiation and humidity sensor does not detect the amount of raindrops because a water-repellent coating, dirt, or ice is on the upper half of the windshield.
  - The rain/light solar radiation and humidity sensor may be malfunctioning if the wiper intermittent operation does not vary depending on the amount of rainfall. If necessary, turn the wiper switch to any position except the "AUTO" position. We recommend that you contact your SUBARU dealer and have the system inspected as soon as possible.
  - The wipers stop operation if the ambient temperature decreases to −15°C (5°F) or lower. The wipers resume operation when the ambient temperature increases to −10°C (14°F) or higher. If you need to operate the wipers under −15°C (5°F), push the wiper control lever down to the low speed position or high speed position.
  - The wipers may not operate if the temperature around the rain/light solar radiation and humidity sensor is more than 80°C (176°F) because the system cannot detect the amount of raindrops under these temperatures.
- This system is also equipped with the vehicle speed interlocking intermittent wiper function. When the vehicle stops, the wiper operation interval will become longer compared with that while driving.
- This system may malfunction in a location with strong radio waves or noise.

- **If the wiper switch is in the “AUTO” position and the wipers do not operate when it rains, or the wiper switch is in the “Low speed” position and the wipers do not operate, turn the wiper switch to the “High speed” position. In this case, we recommend that you contact your SUBARU dealer.**

■ Windshield Wiper and Washer Switches

The wiper operates only when the ignition switch is in the “ON” position.

▼ Windshield wipers

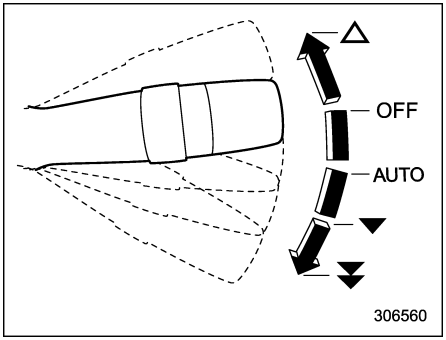

Type A

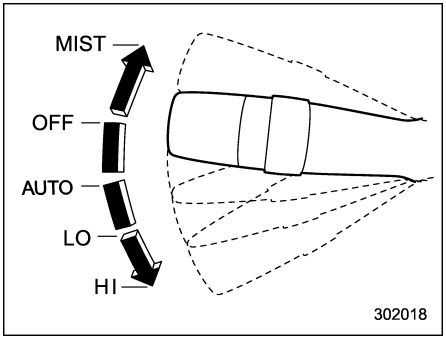

Type B
△ / MIST: Mist (for a single wipe)
OFF: Off
AUTO: Automatic operation
▼ / LO: Low speed
▼▼ / HI: High speed

To turn the wipers on, push the wiper control lever down. With the wiper switch in the “AUTO” position, the wipers operate automatically when the rain/light solar radiation and humidity sensor detects falling rain. The wiper timing is automatically adjusted depending on the amount of rain.

To turn the wipers off, return the lever to the “OFF” position.

For a single wipe of the wipers, push the lever up. The wipers operate until you release the lever.

NOTE

- **The automatic adjusting mode of the wiper timing can be changed from the rain-sensing mode to the vehicle speed interlocking mode. The setting can be changed by a SUBARU dealer. For more details, we recommend that you contact a SUBARU dealer.**
- **While the intermittent wiper is in operation, if the vehicle is started, the wiper will operate once. The operational/non-operational setting of this function can be changed by your SUBARU dealer. For details, we recommend that you contact your SUBARU dealer.**

– CONTINUED –

▽ Rain/light solar radiation and humidity sensor

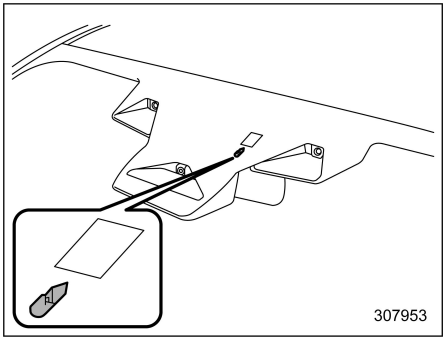

The rain/light solar radiation and humidity sensor is on the windshield glass.

▽ Sensor sensitivity control

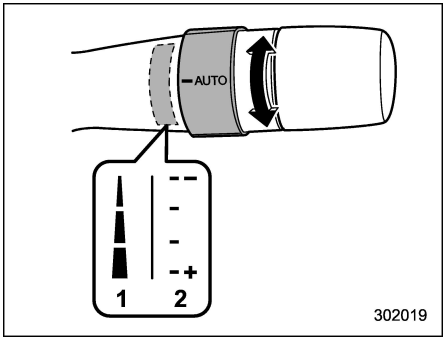

1 Type A
2 Type B

Turn the dial to adjust the sensitivity of the rain/light solar radiation and humidity sensor for wiper control. Turn the dial downward to increase the sensitivity. Turn the dial upward to decrease the sensitivity.

NOTE

When the wiper control lever is in the "AUTO" position, if you turn the dial downward, the wipers will operate once to inform you that the sensor sensitivity has been increased.

▼ Windshield washer

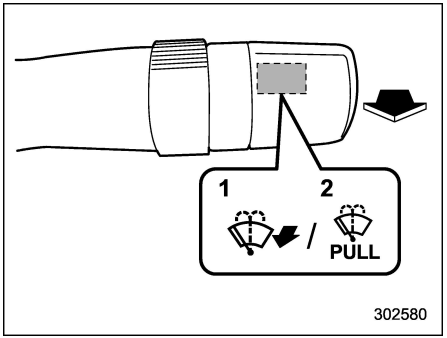

1 Type A
2 Type B

To wash the windshield, pull the wiper control lever toward you. The washer fluid sprays until you release the lever. The wipers operate while you pull the lever.

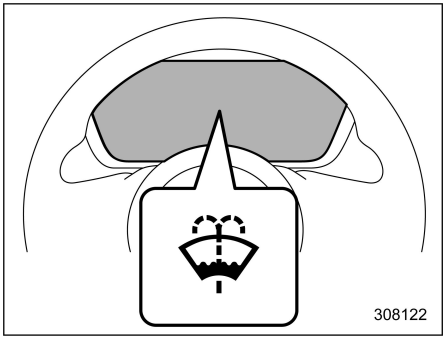

Windshield washer fluid warning light

NOTE

The windshield washer fluid warning light appears when the washer fluid level in the tank has dropped to the lower limit. If the warning light appears, refill the tank with fluid. For the tank refilling method, refer to "Windshield Washer Fluid" ☞P501.

■ Rear Window Wiper and Washer Switch

The wiper operates only when the ignition switch is in the "ON" position.

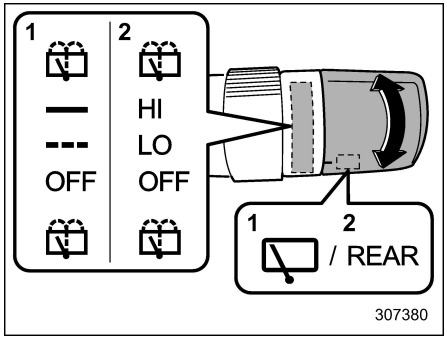

1 Type A
2 Type B
: Washer (accompanied by wiper operation)
▬ / HI: Continuous
▬ / LO: Intermittent
OFF: Off
: Washer (accompanied by wiper operation)

▼ Rear wiper

To turn the rear wiper on, turn the knob switch upward.

To turn the wiper off, return the knob switch to the "OFF" position.

With the switch turned to the "▬"/"LO" position, the rear wiper will operate intermittently at intervals corresponding to the vehicle speed. In this position, when you move the select lever to the "R" position, the rear wiper will switch to continuous operation. When you move the select lever from the "R" (reverse) position to another position, the rear wiper will return to intermittent operation.

Reverse gear interlocked rear wiper:

Even if the rear wiper switch is in the "OFF" position, if the front windshield wiper is operating continuously, the rear wiper will operate intermittently when you move the select lever to the "R" (reverse) position.

The factory setting (default setting) of the reverse gear interlocked rear wiper is operational.

This setting can be changed by a SUBARU dealer. We recommend that you consult your SUBARU dealer for details.

⚠ CAUTION

Do not attach anything that disturbs the rear wiper operation on the rear gate. Doing so may damage the rear wiper when it operates.

▼ Washer

To wash the rear window while the rear wiper is operating, turn the knob switch upward to the "" position. The washer fluid sprays until you release the knob.

To wash the rear window when the rear

– CONTINUED –

wiper is not in use, turn the knob switch downward to the "" position. The washer fluid sprays and the wiper operates until you release the knob.

The rear view camera washer also operates while the rear window washer is operating.

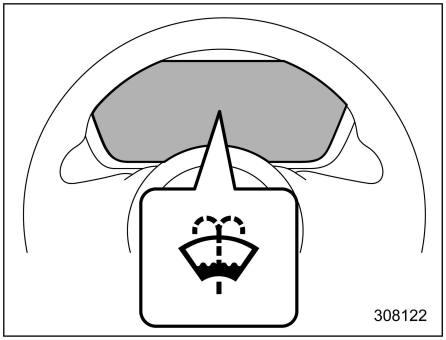

Windshield washer fluid warning light

NOTE

The windshield washer fluid warning light appears when the washer fluid level in the tank has dropped to the lower limit. If the warning light appears, refill the tank with fluid. For the tank refilling method, refer to "Windshield Washer Fluid" ☞P501.

3-18. Headlight Washer

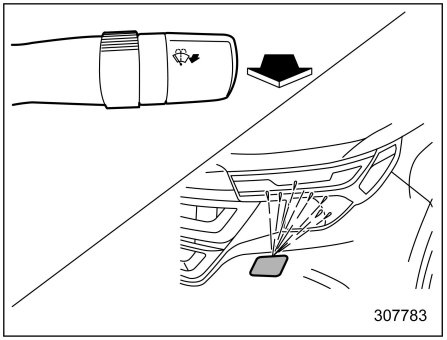

If you pull the wiper control lever toward you and hold it for more than 1 second with the ignition switch in the "ON" position, the headlight washer operates together with the windshield washer in the following conditions.

- The light switch is in the "" position.
- The light switch is in the "AUTO" position and the headlights illuminate automatically.

The windshield washer stops spraying washer fluid as soon as you release the wiper control lever. The headlight washer sprays the washer fluid for approximately 1 second and then stops automatically.

CAUTION

Do not operate the washer if the washer fluid tank is empty. This may cause overheating of the washer motor. Check washer fluid level frequently, such as at fuel stops.

NOTE

When the area around the nozzle cover of the headlight washer is frozen, remove the ice before using.

3-19. Defogger and Deicer

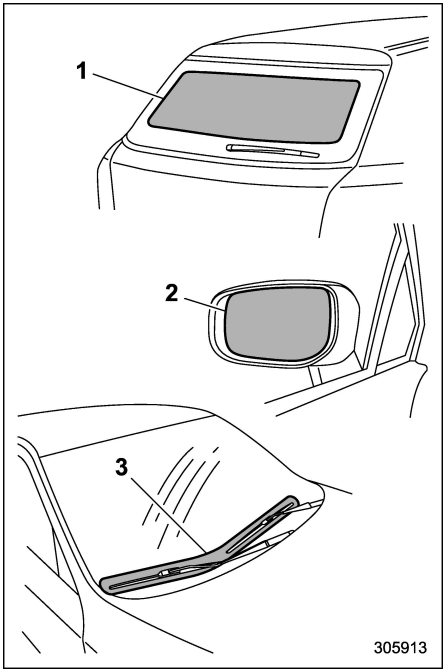

1 Rear window defogger
2 Outside mirror defogger
3 Windshield wiper deicer (if equipped)

The defogger and deicer system is activated only when the ignition switch is in the "ON" position.

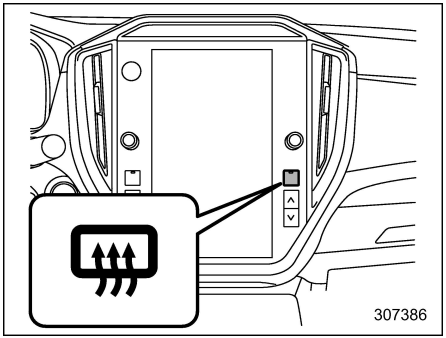

Defogger button

To activate the defogger and deicer system, press the defogger button. The rear window defogger, outside mirror defogger and windshield wiper deicer are activated simultaneously. The indicator light on the defogger button illuminates while the defogger and deicer system is activated.

To turn them off, press the defogger button again. They also turn off when the ignition switch is turned to the "ACC" or "OFF" position.

The defogger and deicer system will automatically shut off after approximately 15 minutes. If the rear window and outside mirrors have been cleared and the windshield wiper blade rubbers have been deiced completely before that time, press the defogger button to turn them off. If defrosting, defogging or deicing is not complete, you have to press the defogger button to turn them on again.

It is possible to set the defogger and deicer system for the continuous operation mode by operating the center information display. For details, refer to "Car settings" ☞P229.

CAUTION

- **To prevent the battery from being discharged, do not operate the defogger and deicer system continuously for any longer than necessary.**
- **Do not use sharp instruments or window cleaner containing abrasives to clean the inner surface of the rear window. They may damage the conductors printed on the window.**

NOTE

- **Turn on the defogger and deicer system if the wipers are frozen to the windshield.**

– CONTINUED –

- **If the windshield is covered with snow, remove the snow so that the windshield wiper deicer works effectively.**
- **While the defogger and deicer system is in the continuous operation mode:**
  - **If the vehicle speed remains at 15 km/h (9 mph) or lower for 15 minutes, the windshield wiper deicer system automatically stops operating. However, the rear window defogger system and outside mirror defogger system maintain continuous operation in this condition.**
  - **If the 12 V battery voltage drops below the permissible level, continuous operation of the defogger system and deicer system is canceled and the system stops operating.**

3-20. Mirrors

Always check that the inside and outside mirrors are properly adjusted before you start driving.

■ Inside Mirror (without Auto-Dimming Function) (If Equipped)

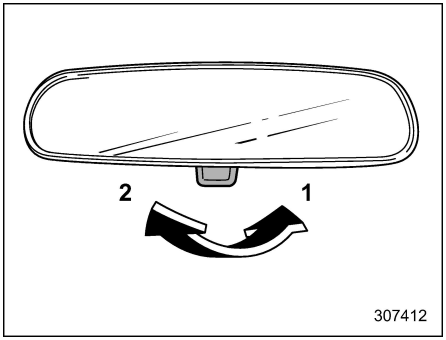

1 Normal position
2 Anti-glare position

Push the tab on the mirror for normal use. To reduce glare from the headlights of the vehicle behind you, pull the tab to the anti-glare position.

■ Auto-Dimming Mirror (If Equipped)

⚠ WARNING

To ensure safety, always adjust the mirrors and operate the switch before driving the vehicle. Perform the automatic dimming on/off operation only when necessary. Otherwise, an unexpected accident may occur.

⚠ CAUTION

- **When cleaning the mirror, use a paper towel or similar material dampened with glass cleaner. Do not spray glass cleaner directly on the mirror because that may cause the liquid cleaner to enter the mirror housing and damage the mirror.**
- **Sensors detecting brightness are located in front of and behind the mirror. Do not attach any object such as a sticker on the sensor areas or put any object over the mirror.**

▼ **How to use the auto-dimming mirror**

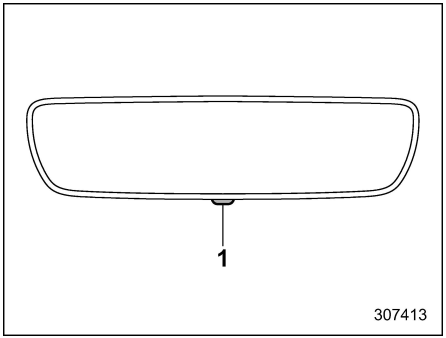

1 ON/OFF switch

1. Move the main body of the auto-dimming mirror and adjust the position so that you can view the rearward direction sufficiently.
2. Press the automatic dimming on/off switch to turn the automatic dimming function on or off. The automatic dimming function is enabled when the switch's green LED indicator is on.

NOTE

- **Sensors are located in front of and behind the mirror.**
- **Even with the mirror in the automatic dimming mode, the mirror surface turns bright if the select lever is shifted into the "R" position. This is to ensure good rearward visibility during reversing.**

■ Outside Mirrors

▼ **Convex mirror**

⚠ WARNING

Objects look smaller in a convex mirror and farther away than when viewed in a flat mirror. Do not use the convex mirror to judge the distance of vehicles behind you when changing lanes. Use the inside mirror (or glance backwards) to determine the actual size and distance of objects that you view in convex mirror.

⚠ CAUTION

Make sure to adjust the mirrors before driving.

▼ **Remote control mirror switch**

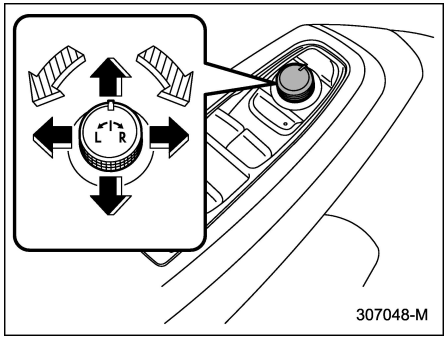

: Select side to adjust

: Direction control

The remote control mirrors operate when the ignition switch is in the "ON" or "ACC" position.

1. Turn the control switch to the side that you want to adjust. "L" is for the left mirror, "R" is for the right mirror.
2. Move the control switch in the direction you want to move the mirror.
3. Return the control switch to the neutral position to prevent unintentional operation.

– CONTINUED –

NOTE

- **The mirrors can also be adjusted manually.**

For models with memory function:

- **The outside mirror can be adjusted for approximately 45 seconds after the following conditions are met.**
  - **The ignition switch is turned to the "OFF" position.**
  - **The door is unlocked using the access key fob.**
- **The outside mirror angle can be registered with button "1", "2" or each of the key fobs. For details, refer to "Registration of memory position with a key fob" ☞P54.**
- **The outside mirror angles can also be retrieved with the Driver Monitoring System user information. To do so, perform user registration in the Driver Monitoring System settings. Refer to "Driver Monitoring System" ☞P236.**

▼ Reverse tilt-down feature (if equipped)

When backing the vehicle up, the right and/or left outside mirrors will turn downward automatically to provide better rear visibility.

1. Push the ignition switch to the ON position.
2. Move the select lever to the R (Reverse) position.
3. The outside mirror surface moves downward.

The outside mirror surface will return to its original position when the following condition are met.

- Approximately 9 seconds after the select lever is moved to any position other than R (Reverse).
- The ignition switch is turned to the "OFF" position.
- The vehicle is running.

NOTE

- **The reverse tilt-down mirror angle can be registered with button "1", "2" or each of the key fobs. For details, refer to "Registration of the reverse tilt-down mirror angle with the key fob" ☞P55.**
- **The reverse tilt-down mirror angle can also be retrieved with the Driver Monitoring System user information. To do so, perform user registration in the Driver Monitoring System settings. Refer to "Driver Monitoring System" ☞P236.**
- **The operational/non-operational setting can be changed by operating the center information display. For details, refer to "Car settings" ☞P229.**
- **The factory setting (default setting) for this function is set as the front passenger's side mirror. The setting of driver's side mirror operation can be changed by a SUBARU dealer. We recommend that you contact your SUBARU dealer for details.**

⚠ CAUTION

Depress the brake pedal during the reverse tilt-down mirror angle adjustment.

To adjust the reverse tilt-down mirror angle, adjust the outside mirror using the remote control mirror switch while the reverse tilt-down operates. For details about how to adjust the outside mirror angle, refer to "Remote control mirror switch" ☞P265.

Memory function:

The angle of the reverse tilt-down mirror can be registered. Register the position with button "1", "2" or each of the access key fobs and retrieve the position.

For details about registration or retrieval of a position, refer to "Driver's Seat Memory Function " ☞P52.

NOTE

If the seat is moved forward or backward 30 mm (1.18 in) or more, the reverse tilt-down will move to the factory default position or the last position hold.

Hold last position function:

The angle of the reverse tilt-down mirror can be set to the latest adjusted angle.

The hold last position function operates when the following condition are met.

- The memory function is not used.
- The seat is moved forward or backward 30 mm (1.18 in) or more.

NOTE

- **The factory setting (default setting) for this function is set as "non-operational". This setting can be changed to "operational" at SUBARU dealers. For more details, we recommend that you contact a SUBARU dealer.**
- **If the hold last position function setting is "non-operation", the reverse tilt-down will move to the factory default position.**

▼ **Power folding mirror switch**

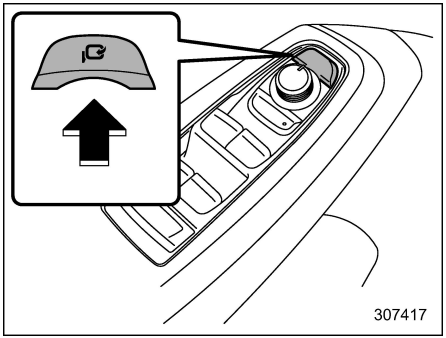

The power folding mirror switch operates when the ignition switch is in the "ON" or "ACC" position.

To fold the outside mirrors, press the power folding mirror switch. To unfold the mirrors, press the switch again.

NOTE

- **If the outside mirrors have been operated (folded or unfolded) manually, when you turn the ignition switch from the "OFF" position to the "ACC" or "ON" position, the outside mirrors may be adjusted automatically depending on the status of the power folding mirror switch.**
- **If the outside mirrors have been manually folded slightly forward of the regularly unfolded position, when you turn the ignition switch from the "OFF" position to the "ACC" or "ON" position, the outside mirrors may automatically fold further forward depending on the status of the power folding mirror switch. When this happens, press the power folding mirror switch. By doing so, the outside mirrors which have been folded to the furthest forward position will extend to the regularly unfolded position and then fold rearward in the usual way. In order to unfold the outside mirrors, press the switch again.**
- **When you fold the outside mirrors manually, the mirrors may not unfold when the switch is pressed, even though the motor operating sound is heard. When this happens, operate the power folding mirror switch again.**
- **When you unfold the outside mirrors manually, the mirrors may become wobbly. Be sure to unfold the mirrors by operating the switch. If the outside mirrors are still wobbly, fold the mirrors again and then unfold them by operating the switch again.**

– CONTINUED –

- **When the temperature is low, the outside mirrors may stop during operation. Push the switch again. When the outside mirrors do not work by operating the switch, move the outside mirrors several times manually. This makes it possible to operate them by switch operation.**
- **When you operate the power folding mirror switch continuously, it may not work. This is not a malfunction. Operate after waiting for a short period of time.**
- **The outside mirrors can be operated (folded or unfolded) manually for approximately 45 seconds after the following conditions are met.**
  - **The ignition switch is turned to the "OFF" position.**
  - **The door is unlocked using the access key fob.**

▽ **Power folding door mirror function**

The mirrors are automatically folded when the power folding mirror switch is in the mirror unfolding position, the ignition switch is turned OFF, and the doors are locked.

The mirrors are automatically unfolded when the power folding mirror switch is in the mirror unfolding position and the doors are unlocked.

NOTE

- **The power folding door mirror function does not operate when the power folding mirror switch is in the mirror folding position.**
- **The setting of the power folding door mirror function can be changed by operating the center information display. For details, refer to "Car settings" ☞P229. Also, the setting can be changed by your SUBARU dealer. We recommend that you contact your SUBARU dealer for details.**

3-21. Tilt/Telescopic Steering Wheel

⚠ WARNING

- **Do not adjust the steering wheel tilt/telescopic position while driving. This may cause loss of vehicle control and result in personal injury.**
- **If the lever cannot be raised to the fixed position, adjust the steering wheel again. It is dangerous to drive without locking the steering wheel. This may cause loss of vehicle control and result in personal injury.**

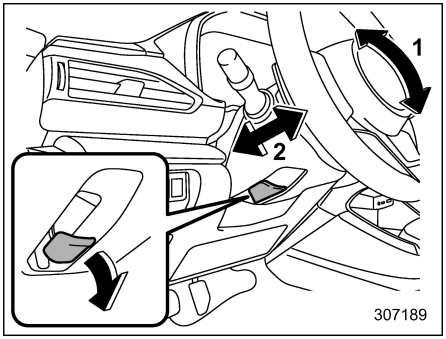

1 Tilt adjustment
2 Telescopic adjustment

1. Adjust the seat position. Refer to “Front Seats” ☞P48.
2. Pull the tilt/telescopic lock lever down.
3. Move the steering wheel to the desired level.
4. Pull the lever up to lock the steering wheel in place.
5. Make sure that the steering wheel is securely locked by moving it up and down, and forward and backward.

3-22. Heated Steering Wheel System (If Equipped)

The Heated Steering Wheel system warms the steering wheel at a constant temperature.

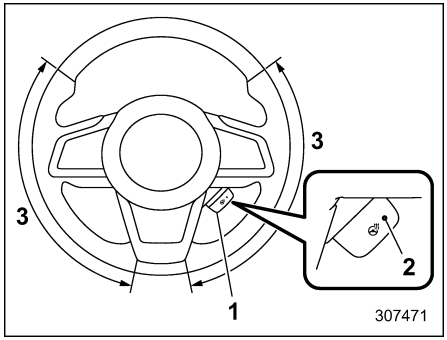

1 Heated Steering Wheel switch
2 Indicator light
3 Heated area

To turn on the Heated Steering Wheel system, pull the Heated Steering Wheel switch when the ignition switch is in the “ON” or “ACC” position. Then the steering wheel will be warmed and the indicator light on the switch will illuminate. To turn off the Heated Steering Wheel system, pull the switch again. Then the indicator light will turn off.

⚠ CAUTION

- **Use the Heated Steering Wheel system with the e-BOXER system running. Otherwise, the battery voltage may drop below the permissible level and it may not be possible to start the e-BOXER system.**
- **There is a possibility that people with delicate skin may suffer slight burns even at low temperatures if they use the Heated Steering Wheel for a long period of time. When using the Heated Steering Wheel, always be sure to warn the persons concerned.**
- **Do not cover the Heated Steering Wheel with an object such as a steering wheel cover. Doing so may cause the Heated Steering Wheel to overheat.**
- **Do not spill liquid on the steering wheel. If liquid is spilled, wipe it off immediately and dry it before using the Heated Steering Wheel system.**

– CONTINUED –

NOTE

- **If the surface temperature of the steering wheel is approximately more than 40°C (104°F) when the switch is turned on, the indicator light will illuminate, but the system will not heat the steering wheel.**
- **The Heated Steering Wheel system will automatically turn off approximately 30 minutes after the system has been turned on.**
- **The temperature of the Heated Steering Wheel system cannot be adjusted.**

3-23. Horn

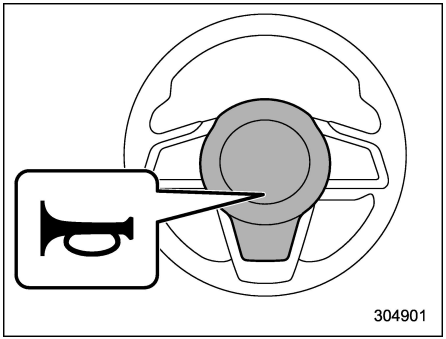

To sound the horn, push the horn pad.

4-1. Ventilator Control 272
Center Ventilators 272
Side Ventilators 272
Rear Ventilators 272
4-2. Climate Control Panel 273
Climate Control Screen 275
4-3. Automatic Climate Control Operation 276
Sensors 277
4-4. Manual Climate Control 277
Airflow Mode Selection 277
Temperature Control 278
Fan Speed Control 279
Air Conditioner Control 279
Air Inlet Selection 280
To Turn Off the Climate Control System 280
4-5. Defrosting 281
4-6. Operating Tips for Heater and Air Conditioner 282
Cleaning Ventilator Grille 282
Efficient Cooling after Parking in Direct Sunlight 282
Checking Air Conditioning System before Summer Season 282
Cooling and Dehumidifying in High Humidity and Low Temperature Weather Condition 282
Air Conditioner Compressor Shut-Off When e-BOXER System Is Heavily Loaded 282
Refrigerant for Your Climate Control System 283
4-7. Air Filtration System 283
Replacing the Cabin Air Filter 284

4-1. Ventilator Control

■ Center Ventilators

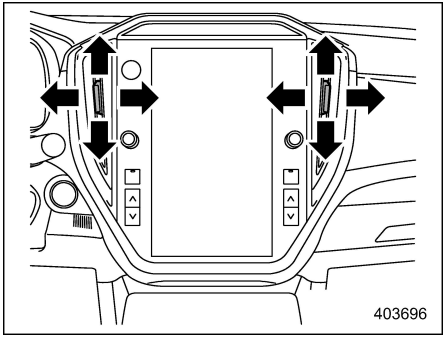

To adjust the airflow direction, move the tab. To close the ventilator, move the tab all the way down.

■ Side Ventilators

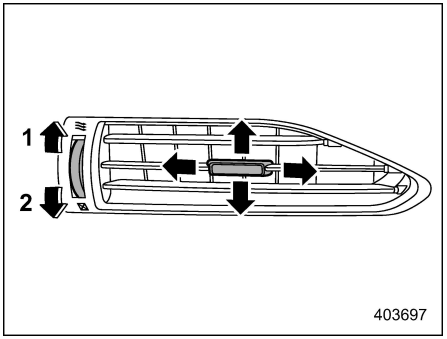

1 Open
2 Close

To adjust the airflow direction, move the tab.

■ Rear Ventilators

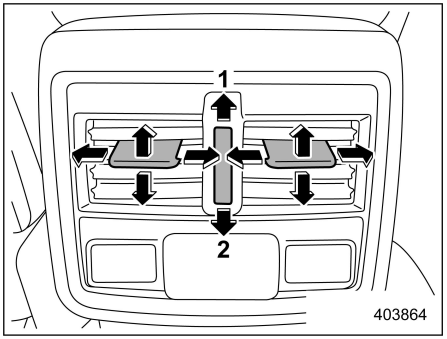

1 Open
2 Close

To adjust the airflow direction, move the tab.

4-2. Climate Control Panel

WARNING

- **The cooling function operates only when the e-BOXER system is running.**
- **Do not leave children or adults who would normally require the support of others alone in your vehicle. Pets should not be left alone either. On hot, sunny days, temperatures in a closed vehicle could quickly become high enough to cause severe or possibly fatal injuries to people or animals.**

– CONTINUED –

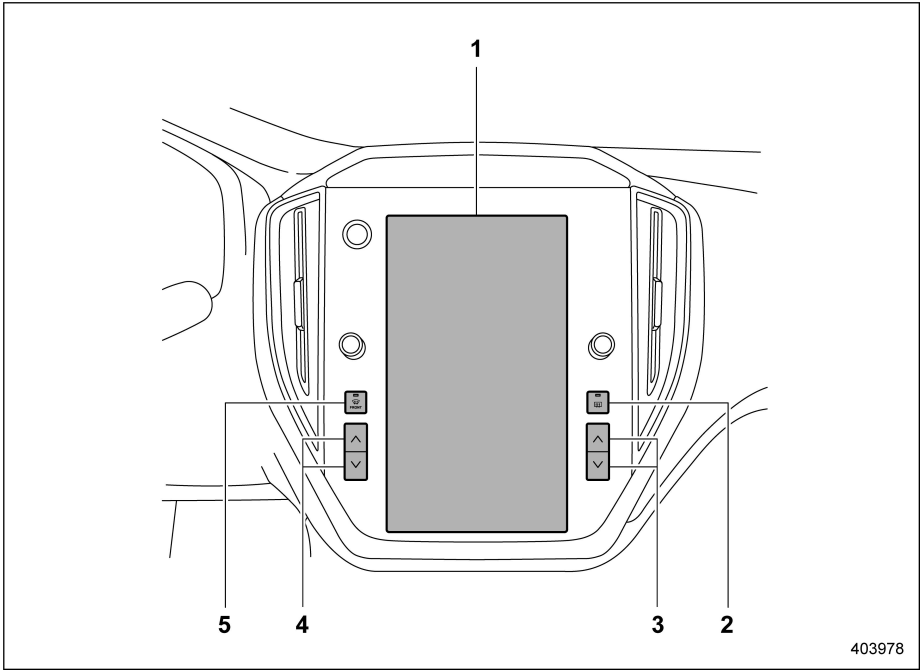

1 Climate control screen
2 Defogger button (Refer to “Defogger and Deicer” ☞P263.)
3 Temperature control button (right-hand side) (Refer to “Temperature Control” ☞P278.)
4 Temperature control button (left-hand side) (Refer to “Temperature Control” ☞P278.)
5 Defroster button (Refer to “Defrosting” ☞P281.)

NOTE

The illustration on the left is a typical example for left-hand drive models. For right-hand drive models, the locations of some buttons are different to that shown in the illustration.

Climate Control Screen

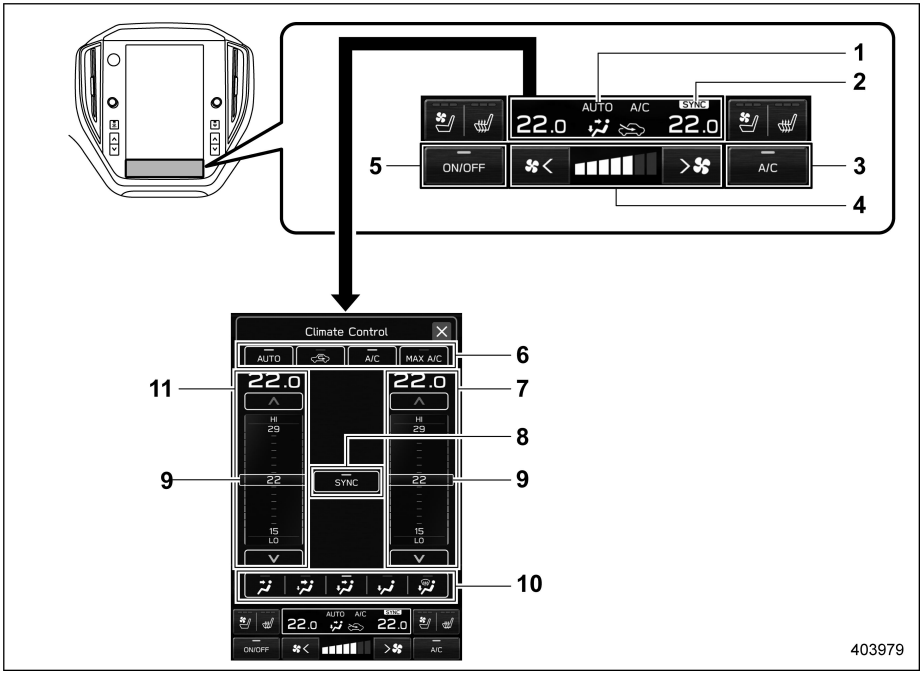

➡: Touch the climate control mode indicator
1 Climate control mode indicator
2 SYNC mode indicator
3 Customizable icon*
4 Fan speed control
5 Climate control ON/OFF icon
6 Climate control mode select icon
7 Temperature control screen (right-hand side)
8 SYNC icon
9 Temperature control bar
10 Airflow mode selection screen
11 Temperature control screen (left-hand side)

*: The customizable icon can be changed to the favorite icon. Refer to “General settings” ☞P225.

NOTE

- **The illustration on the left is a typical example for left-hand drive models. For right-hand drive models, the locations of some buttons are different to that shown in the illustration.**
- **The layout and the available functions for operating the climate control screen may vary depending on the number of items shown on the center information display.**

4-3. Automatic Climate Control Operation

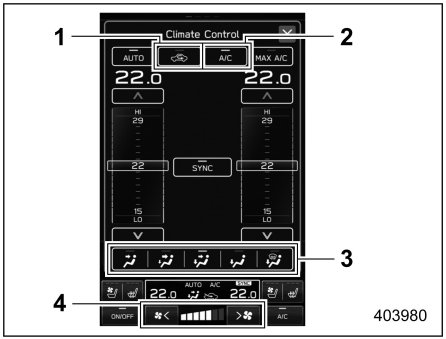

Climate control screen

1 Air inlet selection
2 Air conditioner
3 Airflow mode
4 Fan speed

When the auto mode is selected, the following functions are automatically controlled.

- Airflow mode
- Air inlet selection
- Air conditioner operation
- Fan speed

To activate this mode, perform the following.

"AUTO" is displayed on the customizable icon:

1. Touch "AUTO".
2. Set the preferred temperature. Refer to "Temperature Control" ☞P278.

"AUTO" is not displayed on the customizable icon:

1. Touch the climate control mode indicator.
2. Touch on "AUTO".
3. Set the preferred temperature. Refer to "Temperature Control" ☞P278.

NOTE

- **Operate the automatic climate control system when the e-BOXER system is running.**
- **Even when cooling is not necessary, the air conditioner will automatically turn on if the temperature is set much lower than the current outlet air temperature. Even in this case, the "A/C" indicator light on the climate control screen illuminates.**
- **The air conditioner may not operate in the following cases:**
  - **When the cabin temperature is low**
  - **When the ambient temperature decreases close to 0°C (32°F)**
- **The controllable temperature range may vary depending on the regional specifications of the vehicle.**
- **When "AUTO" is displayed, if you operate the fan speed control or the airflow mode, press the defroster button, or turn on MAX A/C mode, the "AUTO" display will turn off. You can then manually control the system as desired using the climate control screen. To change the system back to auto mode, touch "AUTO".**

To turn off the climate control system, touch "ON/OFF".

At this time, the air inlet selection mode will differ depending on the auto mode and manual mode.

- When the air inlet selection is set to auto mode: Outside air circulation
- When the air inlet selection is set to manual mode: No change

■ Sensors

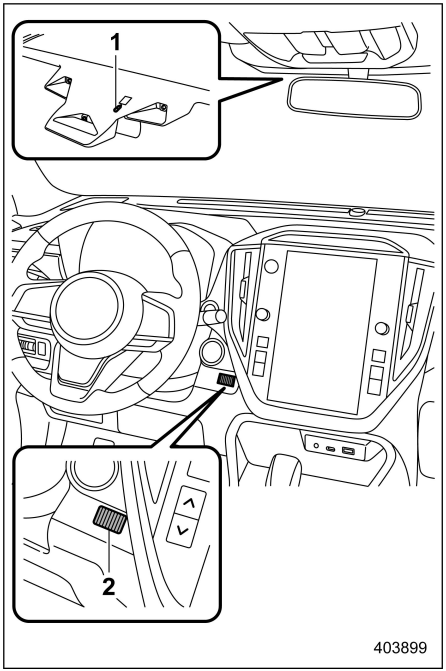

1 Rain/light solar radiation and humidity sensor
2 Interior air temperature sensor

The automatic climate control system employs several sensors. These sensors are delicate. If they are treated incorrectly and become damaged, the system may not be able to control the interior temperature correctly. To avoid damaging the sensors, observe the following precautions:

– Do not subject the sensors to impact.
– Keep water away from the sensors.
– Do not cover the sensors.

4-4. Manual Climate Control

■ Airflow Mode Selection

Select the preferred airflow mode by the following operation.

1. Touch the climate control mode indicator.
2. Touch the preferred airflow mode.

Airflow modes are as follows.

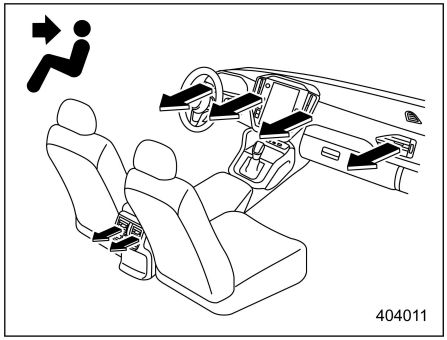

Ventilation: Instrument panel outlets

– CONTINUED –

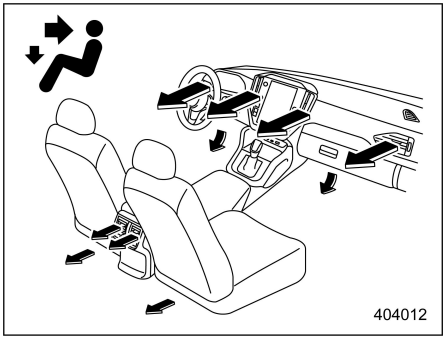

Ventilation 2: Instrument panel outlets and foot outlets

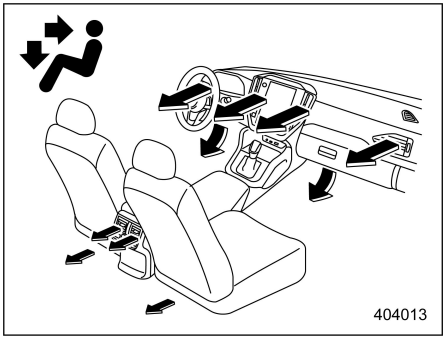

Bi-level: Instrument panel outlets and the foot outlets

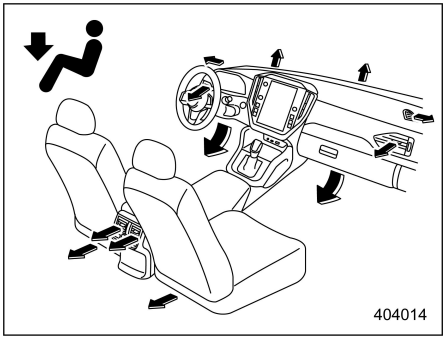

Heat: Foot outlets, both side outlets of the instrument panel and some through windshield defroster outlets (A small amount of air flows to the windshield and both side windows to prevent fogging.)

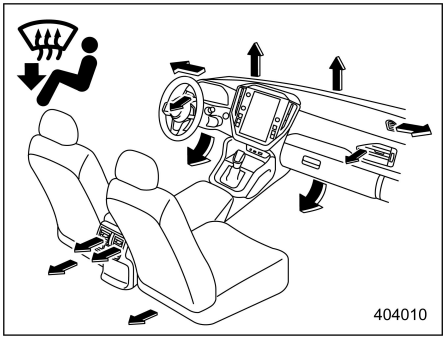

Heat-def: Windshield defroster outlets, foot outlets and both side outlets of the instrument panel

■ Temperature Control

Perform the following operation to regulate the temperature of airflow from the air outlets.

Temperature control buttons:

Press the temperature control button to the blue side (cool) or the red side (warm).

Temperature control screen:

1. Touch the climate control mode indicator.
2. Select the preferred temperature by the following operation.
   - Touch and move the temperature control bar.
   - Touch “∧”/“∨”.

- Touch the preferred temperature in the temperature control screen.

▼ MAX A/C mode

For quicker cooling, touch “MAX A/C” on the climate control mode select icon or customizable icon.

When the MAX A/C mode is on, the following settings will be changed automatically.

- The air conditioner will turn on.
- The temperature will be set on the lowest.
- The fan speed will be set on the maximum speed.
- The air inlet will be set to the recirculation mode.
- The airflow mode setting will be set to the ventilation mode.

To turn off the MAX A/C mode and return to the previous setting, touch “MAX A/C” again.

NOTE

For models with the Driver Monitoring System, MAX A/C mode will be canceled if the Driver Monitoring System completes user recognition again while MAX A/C mode is in use.

▼ SYNC mode

When the SYNC mode is turned on, both the driver’s and passenger’s side temperatures are synchronized using the driver’s side temperature control button and temperature control screen.

- If “SYNC” is displayed on the customizable icon, touch “SYNC” to turn the SYNC mode on or off.
- If a customizable icon other than “SYNC” is displayed, touch the climate control mode indicator. Then touch “SYNC” to turn the SYNC mode on or off.

When the SYNC mode is on, the SYNC mode indicator will be displayed. Touch “SYNC” again, press the passenger’s side temperature control button or operate the passenger’s side temperature control bar to cancel the SYNC mode. When the SYNC mode is off, the SYNC mode indicator will no longer be displayed. In this case, temperature control on the driver’s side and passenger’s side will be separated. The temperature will be controlled individually using the driver’s and passenger’s temperature control button and the driver’s and passenger’s temperature control bar.

■ Fan Speed Control

Select the preferred fan speed by touching [*<] or [>*] on the climate control screen.

■ Air Conditioner Control

The air conditioner operates only when the e-BOXER system is running.

Perform the following operation while the fan is in operation to turn on the air conditioner.

- If “A/C” is displayed on the customizable icon, touch “A/C”. When the air conditioner is on, the “A/C” indicator illuminates. And A/C icon will be displayed on the climate control mode indicator.
- If a customizable icon other than “A/C” is displayed, touch the climate control mode indicator. Then touch “A/C” on the climate control mode select icon. When the air conditioner is on, “A/C” indicator illuminates. And A/C icon will be displayed on the climate control mode indicator.

To turn off the air conditioner, touch “A/C” again. The indicator light will turn off.

NOTE

For efficient defogging or dehumidifying in cold weather, turn on the air conditioner. However, if the ambient

– CONTINUED –

temperature decreases to approximately 0°C (32°F), the air conditioner and dehumidification system may not work properly.

■ Air Inlet Selection

Select the air inlet by touching the air inlet selection icon.

Recirculation mode:

Interior air is recirculated inside the vehicle. This mode is used for the following cases.

- When driving on a dusty road
- When you want cooling performance to increase (for example, in particularly hot weather)

Perform the following operation to select this mode.

- is displayed on the customizable icon:
  (1) Touch .
- is not displayed on the customizable icon:
  (1) Touch the climate control mode indicator.
  (2) Touch on the climate control mode select icon.

will be displayed on the climate control mode indicator.

Outside air circulation mode:

Outside air is drawn into the passenger compartment. This mode is used for the following cases.

- When the road is no longer dusty
- When the interior has cooled to a comfortable temperature

Perform the same operation as the recirculation mode to change the mode. will be displayed on the climate control mode indicator.

⚠ CAUTION

Continued operation in the recirculation mode may fog up the windows. Switch to the outside air circulation mode as soon as the outside dusty condition clears.

NOTE

When outside air circulation is selected, the system may automatically adjust the air inlet setting depending on such factors as the temperature setting, the temperature inside the vehicle, or conditions outside the vehicle.

■ To Turn Off the Climate Control System

To turn off the climate control system, touch the climate control ON/OFF icon.

4-5. Defrosting

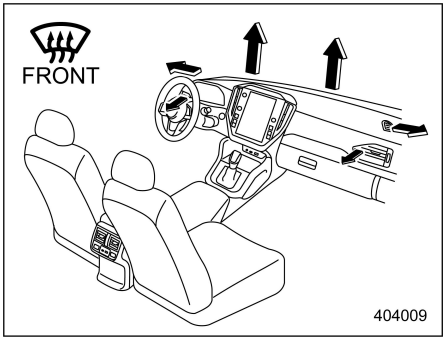

To defrost or dehumidify the windshield and front door windows, perform the following procedures.

- To select the "" mode, press the defroster button.
- To select the "" mode, touch "" on the airflow mode selection screen.

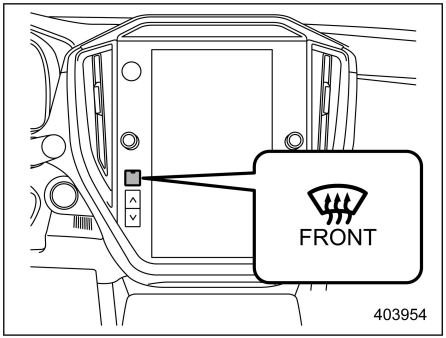

Defroster button

NOTE

- **When the "" or "" mode is selected, the air conditioner operates automatically regardless of the position of the air conditioner icon to defrost the windshield more quickly. At the same time, the air inlet selection is automatically set to the outside air circulation mode.**
- **When you select "" while recirculation mode is selected, the airflow will not switch to the outside air circulation mode and the recirculation mode will remain active.**
- **After defrosting the windshield by pressing the defroster button "", pressing the button again returns the system to the setting that had been selected before the defroster was activated.**

4-6. Operating Tips for Heater and Air Conditioner

■ Cleaning Ventilator Grille

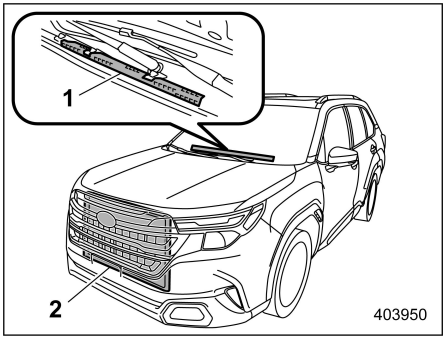

1 Front ventilator inlet grille
2 Condenser

Always keep the front ventilator inlet grille free of snow, leaves, or other obstructions to ensure efficient heating and defrosting. Since the condenser is located in front of the radiator, this area should be kept clean because cooling performance is impaired by any accumulation of insects and leaves on the condenser.

■ Efficient Cooling after Parking in Direct Sunlight

After parking in direct sunlight, drive with the windows open for a few minutes to allow outside air to circulate into the heated interior. This results in quicker cooling by the air conditioner. Keep the windows closed during the operation of the air conditioner for maximum cooling efficiency.

■ Checking Air Conditioning System before Summer Season

Check the air conditioner unit for refrigerant leaks, hose conditions, and proper operation each spring. We recommend that you have the air conditioning system checked by your SUBARU dealer.

■ Cooling and Dehumidifying in High Humidity and Low Temperature Weather Condition

Under certain weather conditions (high relative humidity, low temperatures, etc.) a small amount of water vapor emission from the air outlets may be noticed. This condition is normal and does not indicate any problem with the air conditioning system.

■ Air Conditioner Compressor Shut-Off When e-BOXER System Is Heavily Loaded

To improve acceleration and gas mileage, the air conditioner compressor is designed to temporarily shut off during air conditioner operation whenever the accelerator is fully depressed such as during rapid acceleration or when driving on a steep upgrade.

■ Refrigerant for Your Climate Control System

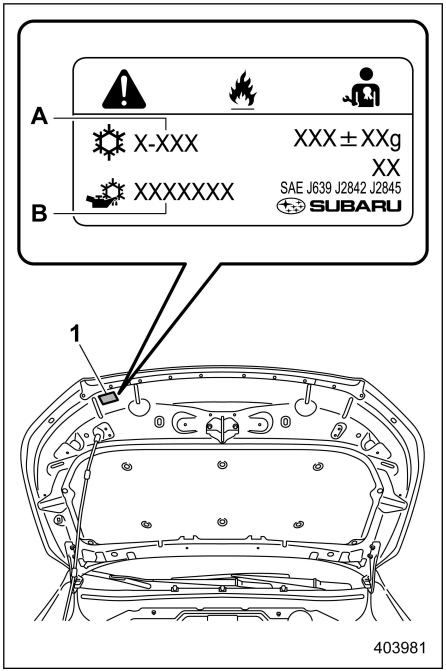

1 Air conditioner label
A Name of refrigerant
B Name of compressor oil

Your air conditioner uses ozone friendly refrigerant R-1234yf (HFO-1234yf) or R-134a (HFC-134a).

Check the air conditioner label in the location shown in the illustration to confirm which type of refrigerant is used in your vehicle.

We recommend that you consult your SUBARU dealer for service.

Repairs needed as a result of using the wrong refrigerant are not covered under warranty.

4-7. Air Filtration System

Replace the cabin air filter according to the maintenance schedule. Refer to “Maintenance Schedule” ☞P467. The schedule should be followed to maintain the filter’s dust collection ability. Under extremely dusty conditions, the filter should be replaced more frequently. It is recommended that you have your filter checked or replaced by your SUBARU dealer. For replacement, we recommend that you use only a genuine SUBARU air filter kit.

⚠ CAUTION

We recommend that you contact your SUBARU dealer if the following occurs, even if it is not yet time to change the filter.

- **Reduction of the airflow through the vents.**
- **Windshield gets easily fogged or misted.**

NOTE

The filter can influence the air conditioning, heating and defroster performance if not properly maintained.

– CONTINUED –

■ Replacing the Cabin Air Filter

1. Remove the glove box.
   (1) Open the glove box.

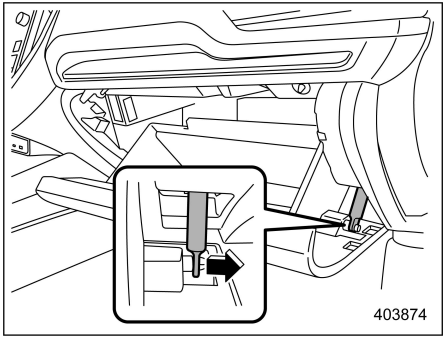

   (2) Remove the damper shaft from the glove box.

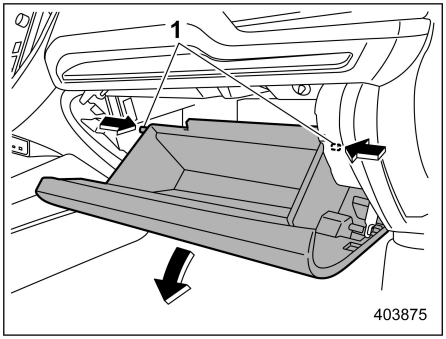

1 Stoppers

   (3) Push both sides of the glove box inward to unlock the stoppers and then pull down the glove box as far as it will go.

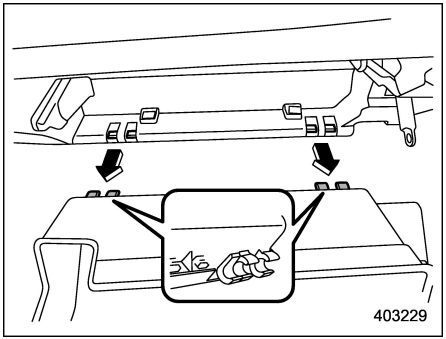

   (4) Pull out the glove box horizontally and remove the hinge portion. When doing this, be careful not to damage the hinge.

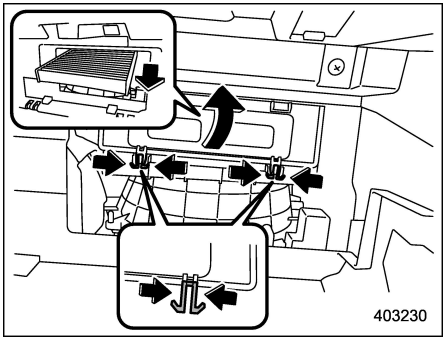

2. Remove the cabin air filter according to the following procedure in order to prevent dust on the air cleaner from falling to the inside of its housing.
   (1) Pinch both tabs and remove the filter cover.
   (2) Gently tilt down the end of the filter and slowly pull it out 1 cm (0.4 in).
   (3) Slowly pull out the rest of the filter.

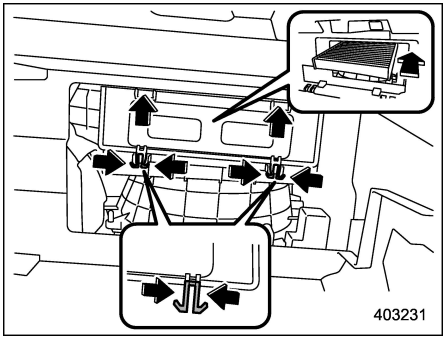

3. Replace the cabin air filter with a new one and then reinstall the cover.

CAUTION

The arrow mark on the filter must point UP.

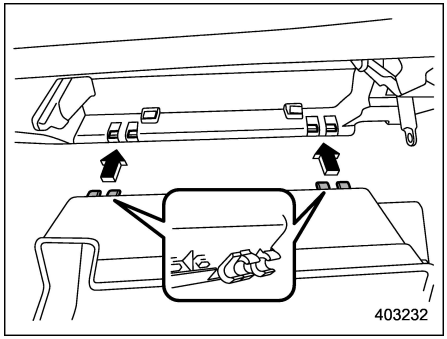

4. Reinstall the glove box, and connect the damper shaft.
5. Close the glove box.

5-1. Antenna 288
Roof Antenna 288

5-2. Audio Set 288

5-1. Antenna

■ Roof Antenna

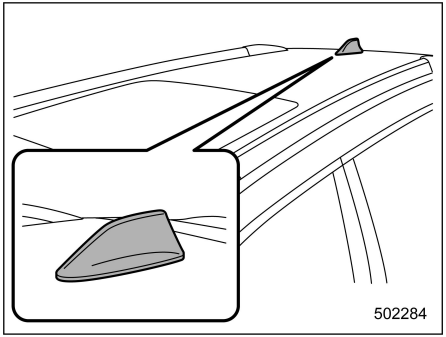

The roof antenna is installed in the center at the rear of the roof.

5-2. Audio Set

⚠ CAUTION

- **We recommend that you always consult your SUBARU dealer before installing a citizen band radio or other transmitting device in your vehicle. Such devices may cause the electronic control system to malfunction if they are incorrectly installed or if they are not suited for the vehicle.**
- **To prevent the battery from being discharged, do not leave the audio/visual system on when the e-BOXER system is not running.**

If your vehicle is equipped with a genuine SUBARU navigation system or audio system, refer to the separate navigation/audio Owner's Manual for details.

Interior Equipment

6-1. Interior Light 290
Map Lights 290
Dome Light 290
Cargo Area Light 291
Rear Gate Light (If Equipped) 291
OFF Delay Timer 291
6-2. Sun Visors 292
Sun Visor Extension Plate 292
Vanity Mirror with Light 293
6-3. Overhead Console 293
6-4. Storage Compartment 293
Glove Box 294
Center Tray 294
Center Console 294
Center Console Tray 295
6-5. Cup Holder 295
Front Passenger's Cup Holder 295
Rear Passenger's Cup Holder 296
6-6. Bottle Holders 296
6-7. Accessory Power Outlet 297
6-8. USB Power Supply 298
How to Use the USB Power Supply 298
6-9. Wireless Charger 299
How to Use the Wireless Charger 300
6-10. Assist Grip 303
6-11. Coat Hook 304
6-12. Shopping Bag Hook 305
6-13. Cargo Upper Hooks 305
6-14. Floor Mat 306
6-15. Cargo Area Cover 307
Using the Cover 307
To Install the Front Cover 307
To Remove the Front Cover 307
To Remove the Cover Housing 308
To Install the Cover Housing 308
6-16. Cargo Tie-Down Hooks 308
6-17. Under-Floor Storage Compartment 309
6-18. Ashtray (If Equipped) 310

6-1. Interior Light

CAUTION

When leaving your vehicle, make sure the lights are turned off to avoid 12 V battery discharge.

■ Map Lights

▼ Map light switches

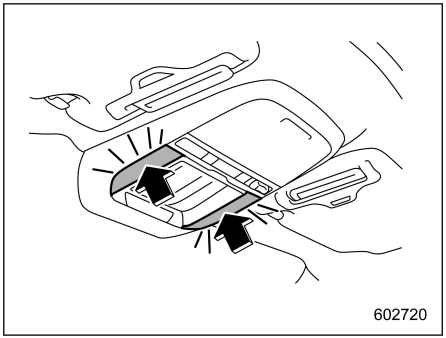

To turn on the map light, press the lens. To turn it off, press the lens again.

CAUTION

Do not keep watching the light source because they use LEDs. Doing so could damage your eyes.

▼ Door interlock switch

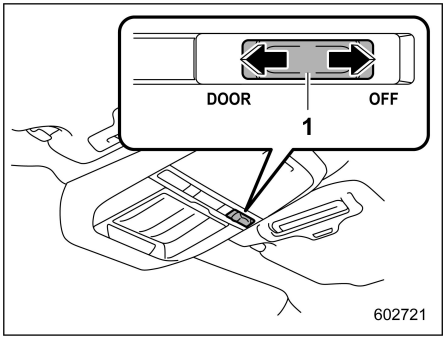

1 Door interlock switch

The door interlock switch has the following positions.

OFF: The map lights do not illuminate automatically in conjunction with a door opening. However, the lights can be turned on manually by pressing the map light lens.

DOOR: The map lights illuminate automatically when any of the doors (other than the rear gate) is opened even while the map light is off. Several seconds after all the doors (other than the rear gate) are closed, the map lights gradually turn off. For details, refer to “OFF Delay Timer” ☞P291.

■ Dome Light

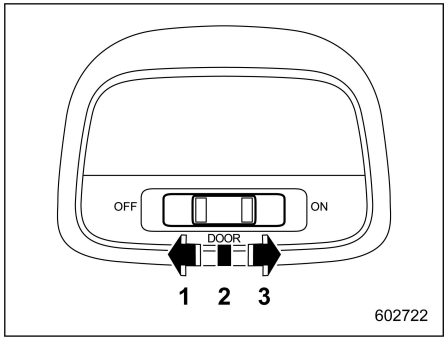

1 OFF
2 DOOR
3 ON

The dome light switch has the following positions.

ON: The light remains on continuously.

OFF: The light remains off.

DOOR: The dome light illuminates automatically in the following cases.

- Any of the doors or the rear gate is opened.

- The doors or the rear gate are unlocked using the keyless access function. Refer to “Locking and Unlocking by Holding the Access Key Fob” ☞P131.
- The doors or the rear gate are unlocked using the remote keyless entry system. Refer to “Remote Keyless Entry System” ☞P143.
- The ignition switch is turned from the “ACC” position to the “OFF” position.

■ Cargo Area Light

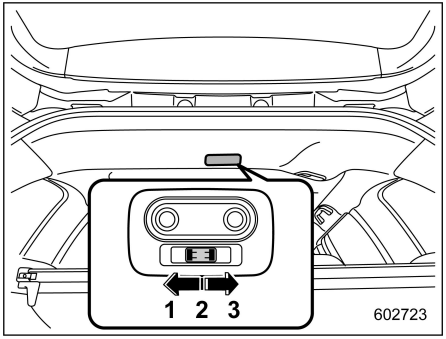

1 OFF
2 DOOR
3 ON

OFF: The light remains off.

DOOR: The light illuminates when the rear gate is opened. The light remains illuminated for several seconds and gradually turns off after the rear gate is closed.

ON: The light remains on continuously.

■ Rear Gate Light (If Equipped)

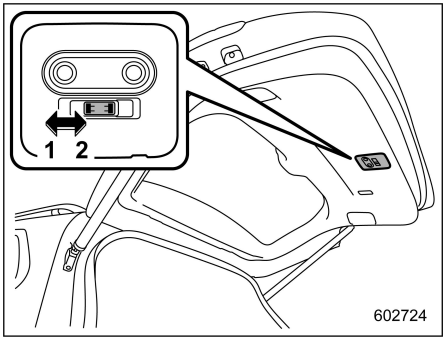

1 OFF
2 DOOR

OFF: The light remains off.

DOOR: The rear gate light will illuminate when the rear gate is opened.

■ OFF Delay Timer

The following lights have an automatic illumination function.

- Dome light
- Map lights
- Cargo area light
- Rear gate light (if equipped)

When the door interlock switch is set to the “DOOR” position, the lights will automatically turn on and off depending on the locking and unlocking of the doors, the opening and closing of the doors, as well as the position of the ignition switch.

NOTE

The setting for the period of time in which the lights remain on (OFF delay timer) can be changed by operating the center information display. For details, refer to “Car settings” ☞P229. Also, the setting of the lights remain on (OFF delay timer) can be changed by your SUBARU dealer. We recommend that you contact your SUBARU dealer for details.

6-2. Sun Visors

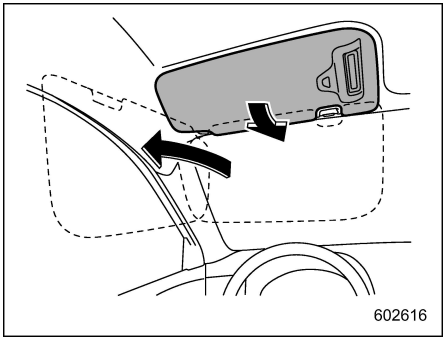

To block out glare, swing down the visors.

To use the sun visor at a side window, swing it down and move it sideways.

■ Sun Visor Extension Plate

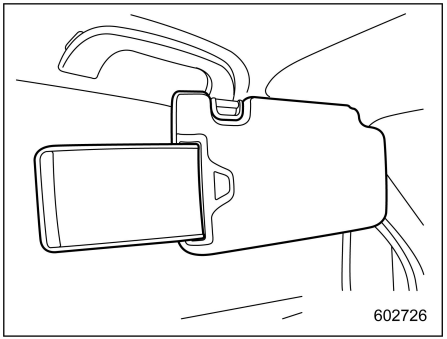

With the sun visor positioned over the side window, you can use the sun visor extension plate to prevent glare through the gap between the sun visor and center pillar. To use the extension plate, pull it toward the rear of the vehicle. When you have finished using it, stow it by pushing it toward the front of the vehicle.

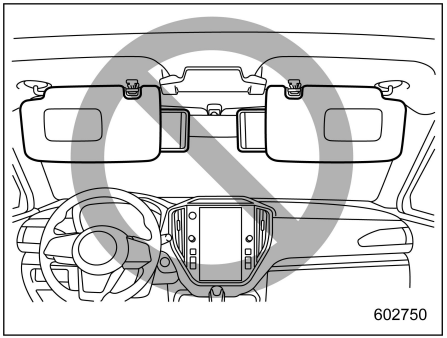

⚠ CAUTION

Do not pull out the extension plate with the sun visor positioned over the windshield. The extension plate would obstruct your view of the inside mirror.

■ Vanity Mirror with Light

CAUTION

Keep the vanity mirror cover closed while the car is being driven to avoid being blinded by glare.

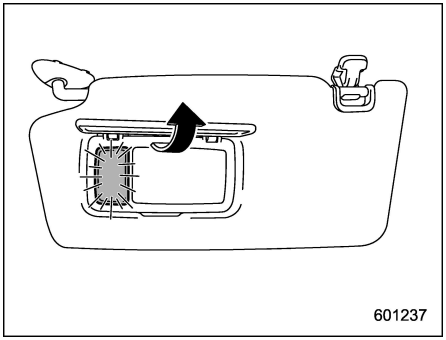

To use the vanity mirror, swing down the sun visor and open the vanity mirror cover.

The lights beside the vanity mirror illuminate when the mirror cover is opened.

NOTE

Use of the vanity mirror light for a long period of time while the e-BOXER system is not running can cause 12 V battery discharge.

6-3. Overhead Console

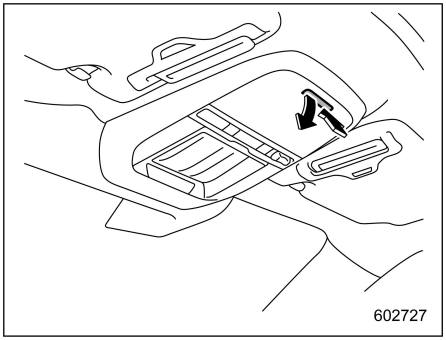

To open the console, push on the lid lightly and it will automatically open.

CAUTION

- **Before driving, ensure that the overhead console is closed.**
- **When your vehicle is parked in the sun or on a warm day, the inside of the overhead console heats up. Avoid storing plastic or other heat-vulnerable or flammable articles such as a lighter in the overhead console.**

6-4. Storage Compartment

CAUTION

- **Always keep the storage compartment closed while driving to reduce the risk of injury in the event of sudden stops or an accident.**
- **Do not store the following items in the storage compartment. Otherwise, it may cause a fire or accident.**
  - **Spray cans, containers with flammable or corrosive liquids or any other dangerous items.**
  - **Plastic or other heat-vulnerable or flammable articles such as a lighter.**

– CONTINUED –

■ Glove Box

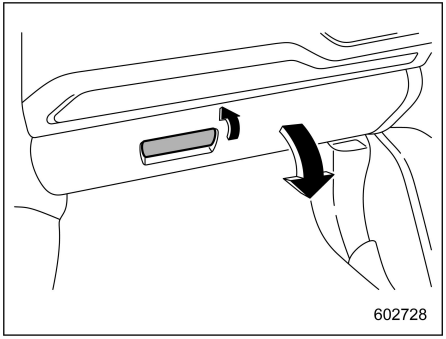

To open the glove box, pull the handle. To close it, push the lid firmly upward.

NOTE

When the instrument panel illumination is on, the light that illuminates the glove box is on. Refer to "Headlights" ☞P244.

■ Center Tray

The center tray is located below the center of the instrument panel.

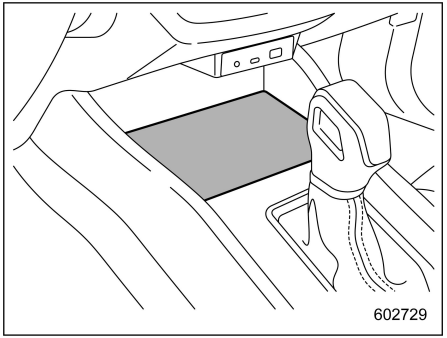

⚠ WARNING

When the wireless charger is turned on, do not place coins, keys, clips, or other metal objects on the center tray. For details, refer to "Wireless Charger" ☞P299.

⚠ CAUTION

Do not use the center tray to hold objects that could roll out of the tray. You may get injured if objects are thrown out of the tray while the vehicle is in motion.

NOTE

When the instrument panel illumination is on, the light that illuminates the center tray is on. Refer to "Headlights" ☞P244.

■ Center Console

The center console box provides a storage space.

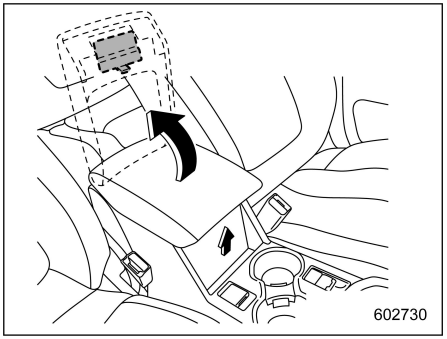

To open the lid, pull up the lock release lever.

■ Center Console Tray

The center console tray is located on the front side of the center console.

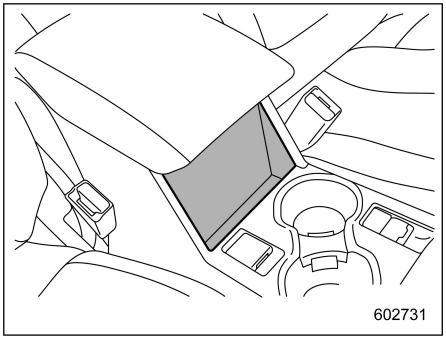

6-5. Cup Holder

⚠ CAUTION

Take care to avoid spills. Beverages, if hot, might burn you and/or your passengers. Spilled beverages may also damage upholstery, carpets or audio equipment.

■ Front Passenger's Cup Holder

⚠ CAUTION

- **Do not pick up a cup from the cup holder or put a cup in the holder while you are driving, as this may distract you and lead to an accident.**
- **Take care not to spill a beverage on the select lever or any switch(es) in the adjacent area. If the beverage is spilled, it may cause a malfunction of the select lever and/or switch(es).**

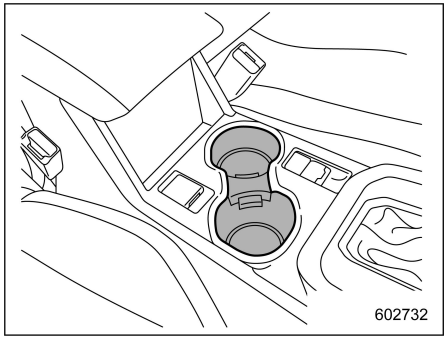

The dual cup holder is built into the center console.

– CONTINUED –

■ Rear Passenger's Cup Holder

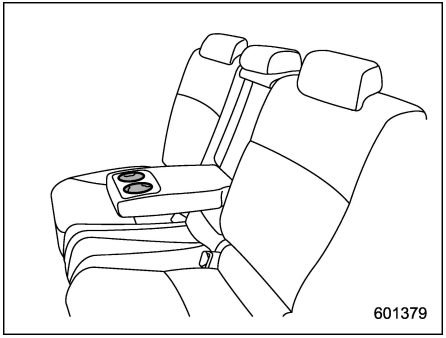

A dual cup holder is built into the armrest.

⚠ CAUTION

When a cup containing a beverage is in the cup holder, do not fold down or recline any seat. Otherwise, the beverage could spill while driving and, if the beverage is hot, it could burn you and/or your passengers.

6-6. Bottle Holders

⚠ CAUTION

- **Do not pick up a bottle from the bottle holder or put a bottle in the holder while you are driving, as this may distract you and lead to an accident.**
- **When placing a beverage in a bottle holder, make sure it is capped. Otherwise, the beverage could spill when opening/closing the door or while driving and, if the beverage is hot, it could burn you and/or your passengers.**

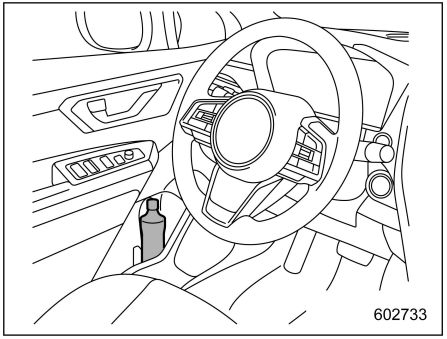

The bottle holder equipped on each door trim can be used to hold beverage bottles and other items.

6-7. Accessory Power Outlet

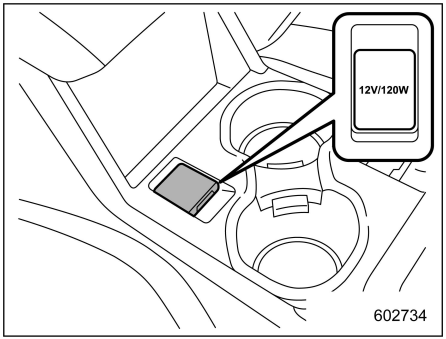

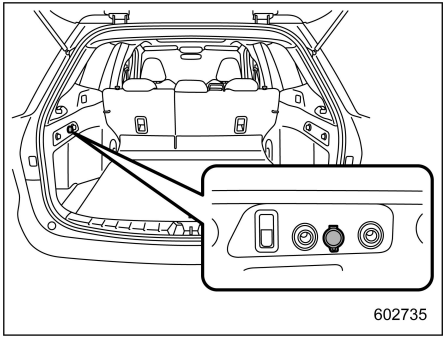

Accessory power outlets are provided in the center console and cargo area. Electrical power (12 V DC) from the 12 V battery is supplied to the outlet when the ignition switch is in either the “ACC” or “ON” position.

You can use an in-vehicle electrical appliance by connecting it to the outlet.

The maximum power rating of an appliance that can be connected is **120 W**. Do not use an appliance which exceeds the indicated wattage for the outlet.

⚠ CAUTION

- **Do not attempt to use a cigarette lighter in the accessory power outlet.**
- **Do not place any foreign objects, especially metal ones such as coins or aluminum foil, into the accessory power outlet. That could cause a short circuit. Always put the cap on the accessory power outlet when it is not in use.**
- **Use only electrical appliances which are designed for 12 V DC.**

  The maximum power rating of an appliance that can be connected is 120 W. Do not use an appliance which exceeds the indicated wattage for the outlet.

  Overloading the accessory power outlet can cause a short circuit. Do not use double adapters or more than one electrical appliance.
- **If the plug on your electric appliance is either too loose or too tight for the accessory power outlet, this can result in a poor contact or cause the plug to get stuck. Only use plugs that fit properly.**
- **Use of an electric appliance in the accessory power outlet for a long period of time while the e-BOXER system is not running can cause 12 V battery discharge.**
- **Before driving your vehicle, make sure that the plug and the cord on your electrical appliance will not interfere with your shifting gears and operating the accelerator and brake pedals. If they do, do not use the electrical appliance while driving.**

6-8. USB Power Supply

CAUTION

- **The specification of a USB terminal that can be used is the Type-A and Type-C. If a different specification of terminal is connected, power supply or charging may not be possible, or the device may malfunction.**
- **There is a risk that a connected device may malfunction or data may be damaged. The connection of a device shall be performed at your responsibility.**
- **To avoid an electric shock or a malfunction, observe the following precautions.**
  - **Do not connect a USB hub.**
  - **Do not insert any metal or other foreign object into the USB terminal.**
  - **Do not spill water or other liquid on the USB terminal.**
- **Be careful not to pull the connected cable. Doing so could break the USB terminal and the connected device.**
- **If a device is connected for a long time when the e-BOXER system is not running, the 12 V battery may be discharged. Even when the e-BOXER system is running, we recommend that you do not connect a device for an unnecessarily long time.**
- **Do not connect a malfunctioning device. Doing so may cause the risk of smoke and fire.**

NOTE

- **The rated voltage of each USB terminal is 5 V. For details about the maximum rated power, refer to "How to Use the USB Power Supply" ☞P298. Before connecting a device, be sure to read the instruction manual of the device and check whether or not this specification of the output is supported by the device. If a device that requires power exceeding the maximum rating is connected, power supply or charging may not be possible. Even if charging could be completed, the time required for charging may be longer than when the genuine charger for that device is used.**
- **Depending on the device, charging may be possible only when a special cable is used. In this case, be sure to connect the device using the special cable.**
- **When a device that communicates with a PC is connected, power supply or charging may not be possible.**
- **When connect a device for charging, disconnect the device promptly after charging is completed.**

■ How to Use the USB Power Supply

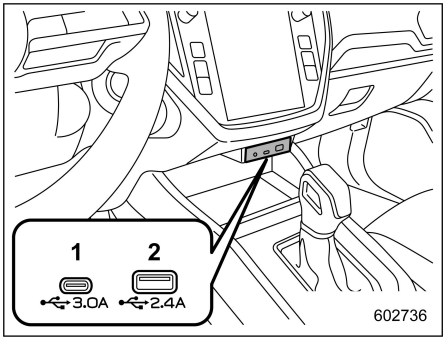

Front seat USB power supply (an audio device can be connected and used)

1 USB Type-C: DC 5 V/3.0 A*

2 USB Type-A: DC 5 V/2.4 A*

*: The available electrical power of the two USB ports is a maximum of 5.4 A.

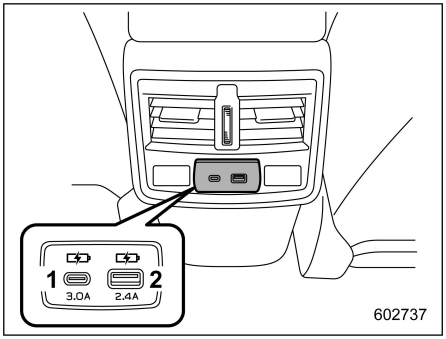

Console USB power supply (charge only)

1 USB Type-C: DC 5 V/3.0 A*
2 USB Type-A: DC 5 V/2.4 A*

*: The available electrical power of the two USB terminals is a maximum of 5.4 A.

Use the USB terminal to use or charge an electronic device.

When the ignition switch is in the “ACC” or “ON” position, the power can be supplied to the electronic device.

6-9. Wireless Charger

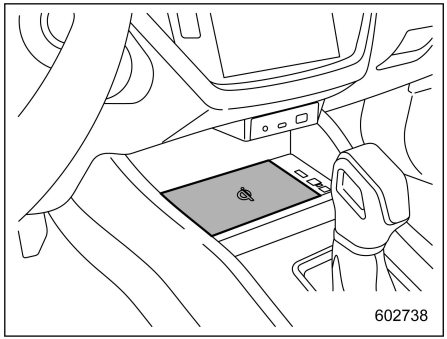

Wireless charger

To charge a cell phone, smartphone or a similar mobile device compatible with the Qi wireless charging standard, place the device in the charging area located below the center information display.

The “Qi” logo is a trademark of the Wireless Power Consortium.

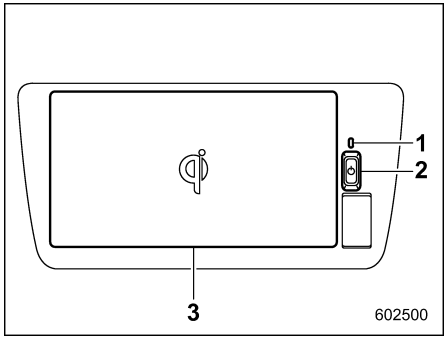

1 Indicator light
2 Power switch
3 Charging area

NOTE

Mobile devices and wireless chargers contain coils for charging. These coils allow the wireless charging system to charge a mobile device with a high level of charging efficiency. When your device is in the charging area, the wireless charger detects it and aligns an integrated moving coil with the coil in your device for charging. If vehicle vibration causes the two coils to become misaligned while the vehicle is in motion, the moving coil of the wireless charger automatically repositions itself and resumes charging.

– CONTINUED –

However, if the mobile device moves out of the charging area, charging will automatically stop.

■ How to Use the Wireless Charger

1. The wireless charger operate when the ignition switch is in the “ON” or “ACC” position.

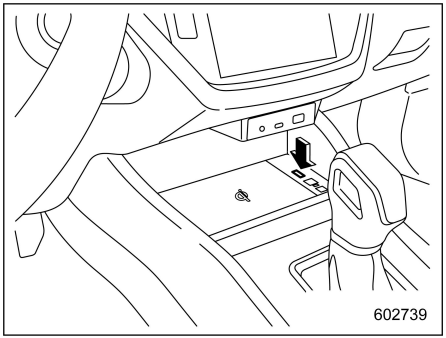

2. Press the power switch once to turn on the wireless charger. When the wireless charger is ON, the indicator light illuminates in green.

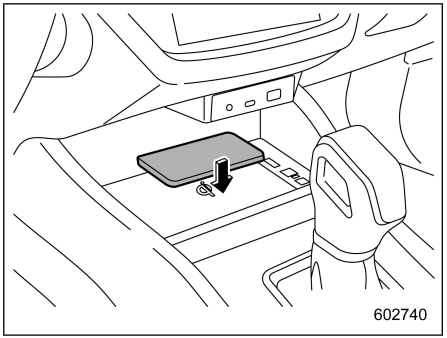

3. Place the mobile device so that the screen or keypad is facing up (the charging surface is facing downward). The center of the device must also be aligned with the center of the charging area. The indicator light illuminates in orange during charging.
4. The indicator light illuminates in green when charging is complete.

NOTE

- **If the indicator light does not illuminate in orange and device charging does not occur, move the device to the center of the charging area. Depending on the mobile device, the charging coil may not be in the center of the device. In such cases, place the mobile device so that its charging coil is in the center of the charging area.**
- **The power status of the wireless charger is stored even when the ignition switch is turned to the “OFF” position.**

▼ How to use the quick charge

The following types of mobile devices support quick charging as opposed to normal charging (5 W).

- Mobile devices compliant with WPC* Ver. 1.2.4 and compatible with fast chargers can be charged up to 10 W.
- iPhone 8 (or later) with an iOS version compliant with WPC* Ver. 1.2.4 and compatible with 7.5 W charging.

* WPC: Wireless Power Consortium

1. Press the power switch three times to change to the quick-charging mode while your mobile device is charging in normal mode. The indicator light will change from orange to alternating green and orange when the wireless charger switches to the quick-charging mode.
2. When charging is complete, the quick-charging mode ends. To restart quick-charging, switch to the quick-charging mode again.

▼ To turn off the wireless charger

Press the power switch once. When the wireless charger is OFF, the indicator light turns off.

▼ Indicator light patterns

Indicator light	Interpretation
Off	The wireless charger is turned off
Green (illuminated)	Standby (ready for charging)*1
	Charging is complete*2
Orange (illuminated)	A mobile device is in the charging area (a mobile device is being detected)
	Charging
Green and orange illuminate alternately	Quick charging is in progress

*1: No power is output for charging when the wireless charger is in standby mode. Even if metal objects are placed on the charging tray in this state, they will not overheat.
*2: For some mobile devices, the indicator light remains orange even after charging is complete.

▼ List of warnings

Indicator light	Possible causes	Solution
Flashes orange once per second	A communication error occurred between the wireless charger and the access key fob.	If the e-BOXER system is running, stop the e-BOXER system and restart it. If the ignition switch is in “ACC”, start the e-BOXER system once.
Repeatedly flashes orange three times	Metallic foreign object detected. A foreign object is detected between the mobile device and the charging area.	Remove any foreign objects between the mobile device and the charging area.
Repeatedly flashes orange three times	The mobile device is out of alignment: The overheat prevention function of the charging coils was triggered because the mobile device’s charging coils were out of alignment with the charging area.	Remove the mobile device from the charging area, check that the activation indicator light is illuminating in green again, and place the device in the center of the charging area. If there is a case or cover on your mobile device, be sure to remove it.
Repeatedly flashes orange four times	The temperature inside the wireless charger has increased.	Remove the mobile device from the charging area temporarily to stop charging. When the temperature of the mobile device cools down, start charging the device again.

– CONTINUED –

WARNING

- For safety reasons, drivers must not operate a charging mobile device while driving.
- Do not charge small devices such as cordless headphones or light-weight cell phones while driving. Due to their light weight, these devices may be thrown from the charging tray resulting in an accident.
- The wireless power receiver can affect some implanted or other electrical medical devices. If you use a cardiac pacemaker, ventricular pacing pulse generator, cardioverter-defibrillator, or a similar device, consult with your physician before using the wireless charger.

CAUTION

- Before charging your device, make sure that there is no metal between the charging area and the mobile device. Metal objects may generate heat and cause burns when placed in the charging area.
- Do not apply strong force or impact to the charging area.
- Do not affix aluminum stickers to or place other metal objects in the charging area. Also, do not charge a mobile device that has aluminum stickers or other metal objects attached to it that may come in contact with the charging area. Metal objects may generate heat and cause burns when placed in the charging area.
- Do not disassemble, modify, or remove the wireless charger.
- Do not place magnetized objects in or near the charging area.
- During charging, do not cover your device with a cloth, etc.
- Do not charge your device in dusty conditions.
- Make sure that no foreign objects or liquids are placed or spilled in the wireless charger.
- Do not charge any devices other than those specified.
- Do not place the access key fob near the wireless charger.
- When your device is charging, keep any magnetic cards such as credit cards and precision devices such as watches away from the charging area. They may be damaged.
- Do not leave objects in the trays unattended for a long period of time. The paint on the trays may deteriorate depending on the type of device case or accessory.
- When the OS version of a mobile device is updated, the charging specifications may change significantly. Also, if the OS versions compatible with WPC change, the quick charging function may become unavailable. For details, check the website of your mobile device manufacturer.
- To prevent discharging the 12 V battery, do not use the wireless charger for long periods of time when the engine is stopped.

NOTE

- This function is not available for devices larger than the charger tray.
- The wireless charger and mobile device will emit heat during charging, but this is not a malfunction.
- When your mobile device emits heat during charging, the mobile device's protective function may cancel char-

ging.

- A beep will sound when the power switch of the wireless charger is pressed to turn the power ON or when a mobile device is being detected. This is not a malfunction.
- The fan may activate when the temperature rises, but this is not a malfunction.
- Qi standard wireless charger can be used on compatible devices. However, not all Qi standard devices and compatibility are guaranteed.
- If you hear noise on the AM radio while your device is charging, you may be able to reduce the noise by changing the charging frequency.
  To change the charging frequency, press and hold the power switch to turn on the system.
  After a certain amount of time, the indicator light will flash orange twice to indicate when the frequency changes.
- If the access key fob cannot be detected in the cabin, the battery cannot be charged. In addition, charging may be temporarily suspended when the remote keyless entry system is in operation, such as when opening and closing doors.
- If you are near a radio or TV tower, broadcast station, airport, or other location that generates strong radio waves or noise, the system may not operate properly.
- In the following cases, the wireless charger will not operate normally:
  - The mobile device is protruding from the charging area.
  - The mobile device is equipped with a large protruding camera.
  - A thick object such as a case, cover, or accessory is between the charging surface of the portable device and the charging area.
  - Two or more mobile devices are placed on the charging tray at the same time.

6-10. Assist Grip

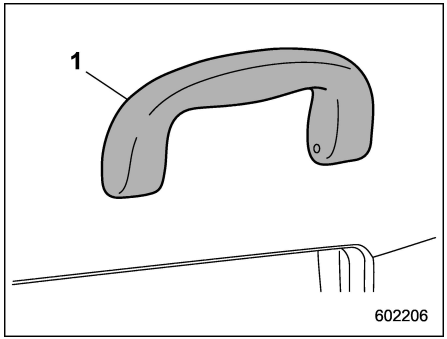

1 Assist grip

The assist grip is to be held to support the body of the passengers when they are in the seat and the vehicle is moving.

WARNING

Do not hold the assist grip when getting up from the seat. Holding and pulling the assist grip in the wrong way could break the grip and possibly cause injury.

– CONTINUED –

CAUTION

Do not attach heavy objects to the assist grip. Doing so could break it and damage the object.

6-11. Coat Hook

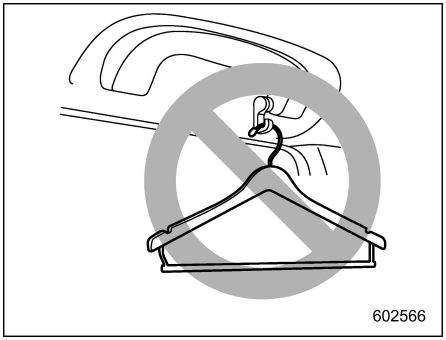

WARNING

Obey the following instructions.

- **Do not hang coat hangers or other hard or pointed objects on the coat hooks. Hang clothing directly on the coat hooks without using hangers.**
- **Before hanging clothing on the coat hooks, make sure there are no pointed objects in the pockets.**

If these instructions are ignored, the following may occur in sudden stops or in a collision.

- **Serious injuries by the items thrown through the cabin.**
- **Incorrect SRS curtain airbag deployment.**

CAUTION

Never hang anything on the coat hook that might obstruct the driver's view or that could cause injury in sudden stops or in a collision. And do not hang items on the coat hook that weigh 5 kg (11 lbs) or more.

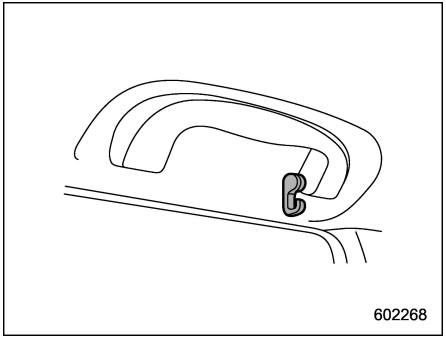

The coat hook is attached to each rear passenger's assist grip.

6-12. Shopping Bag Hook

CAUTION

Do not hang items on the shopping bag hook that weigh 3 kg (6 lbs) or more.

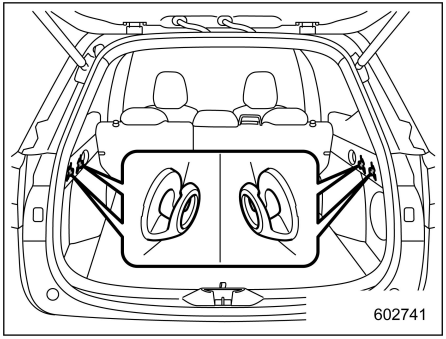

A shopping bag hook is attached to each side of the cargo area.

6-13. Cargo Upper Hooks

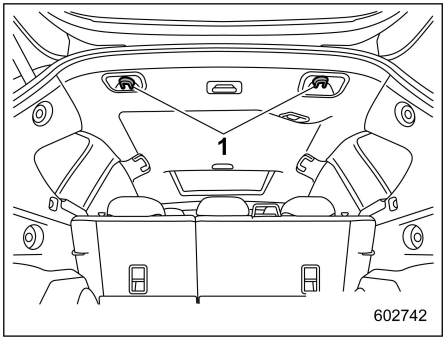

1 Cargo upper hooks

There are two hooks on the lining in the cargo area. Use them to hang or secure lightweight objects when the vehicle is stopped.

WARNING

Do not hang anything on the hooks that produces a flame. Flammable gas may fill the inside of the vehicle or cause a fire.

CAUTION

When using a hook, observe the following precautions.

- **Do not drive with an object hanging on a hook. There is a risk that you will not be able to see behind you, or that an object may be propelled when braking or starting suddenly, which could lead to an accident or injury.**
- **Do not hang heavy or large objects on the hook.**

  Maximum load capacity: 3 kg (6 lbs)
- **Do not use the hooks to secure a child restraint system.**
- **On hot, sunny days, do not leave objects hanging from the hooks for a long time. If the inside of the car becomes hot, the hook may be deformed, and the hanging objects may fall.**

6-14. Floor Mat

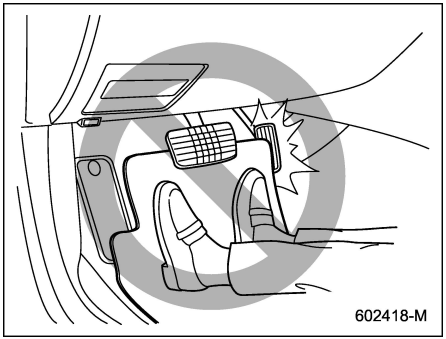

CAUTION

If the floor mat slips forward and interferes with the movement of the pedals during driving, it could cause an accident. Observe the following precautions to prevent the floor mat from slipping forward.

- **Be sure to use a genuine SUBARU floor mat designed with grommets in the correct locations.**
- **Make sure that the driver's floor mat is placed back in its proper location and is correctly secured on its retaining pins.**
- **Do not use more than one floor mat.**

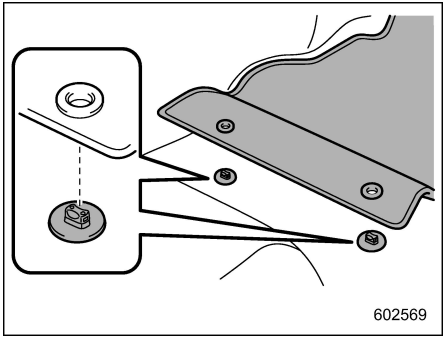

1. Insert the retaining hooks (clips) into the floor mat eyelets.

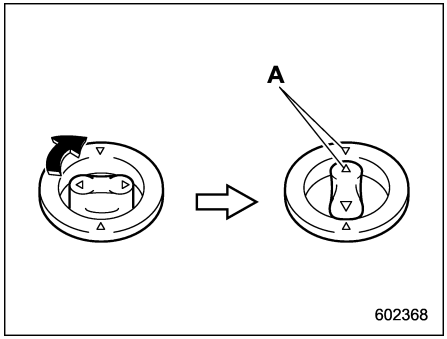

A: Align the triangle marks (△) when installing the floor mats.

2. Turn the upper knob of each retaining hook (clip) to secure the floor mats in place.

6-15. Cargo Area Cover

The cargo area cover is provided for covering the cargo area and to protect its contents from direct sunlight. This cover is detachable to make room for additional cargo.

■ Using the Cover

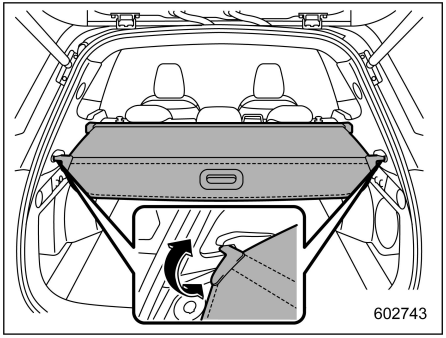

To extend the cover, pull the cargo area cover using the center hole, then insert its hooks into the catches as shown. To rewind it, unhook it from the catches and it will rewind automatically. You should hold on to the cover and guide it back into the cover housing while it is rewinding.

⚠ WARNING

Do not place anything on the extended cover. Putting excessive weight on the extended cover can break it and an object on the cover could tumble forward in the event of a sudden stop or collision. This could cause serious injury.

⚠ CAUTION

Be careful not to scratch the rear gate stays while extending and rewinding the cover. Scratches on the stays could cause leakage of gas from the stays, which may result in their inability to hold the rear gate open.

■ To Install the Front Cover

⚠ CAUTION

When reclining the rear seatback, move the front cover backward so that the cover is not damaged.

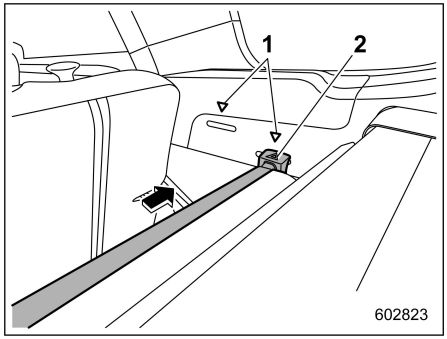

1 Triangle marks (vehicle trim)
2 Triangle mark (front cover)

1. Locate the triangle mark on the right side of the front cover and align it with one of the triangle marks on the vehicle trim. Once the marks are aligned, fix the front cover in place.
2. Push the front cover to the right side and shorten the bar.
3. Repeat the procedure described in step 1 on the left side of the vehicle.

■ To Remove the Front Cover

1. Push the front cover to the right side and shorten the bar.
2. Remove the front cover.

– CONTINUED –

■ To Remove the Cover Housing

1. Rewind the cover.

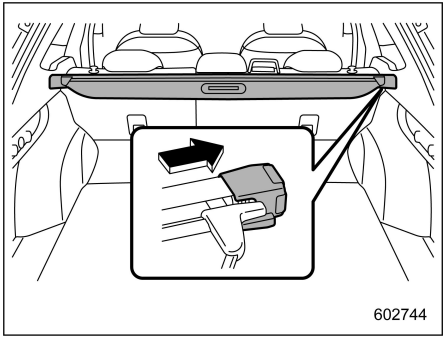

2. Push the cover housing to the right side and shorten it.
3. Take it off the retainer.

■ To Install the Cover Housing

The right end of the cover area cover is a sliding structure.

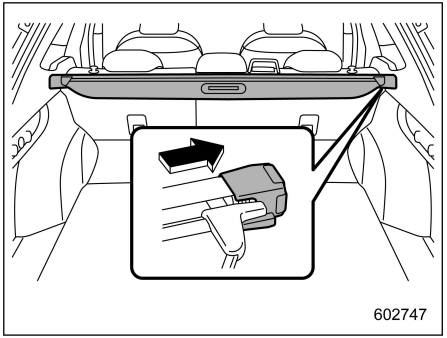

1. Insert the right end of the cover into the recessed portion.
2. Hold the cover housing securely and insert the left end of the cover into the recessed portion.

6-16. Cargo Tie-Down Hooks

⚠ CAUTION

The cargo tie-down hooks are designed only for securing light cargo. Never try to secure cargo that exceeds the capacity of the hooks. The maximum load capacity is 20 kg (44 lbs) per hook.

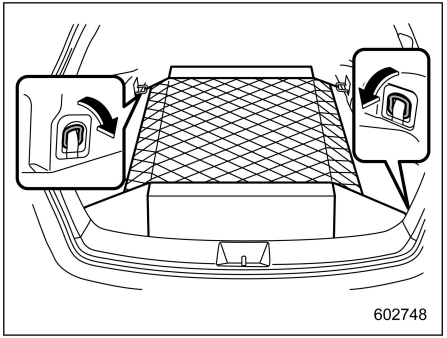

The cargo area is equipped with four tie-down hooks so that cargo can be secured with a cargo net or ropes.

When using the front tie-down hooks, turn them down out of the storing recesses. When not in use, put the hooks up into the storing recesses.

6-17. Under-Floor Storage Compartment

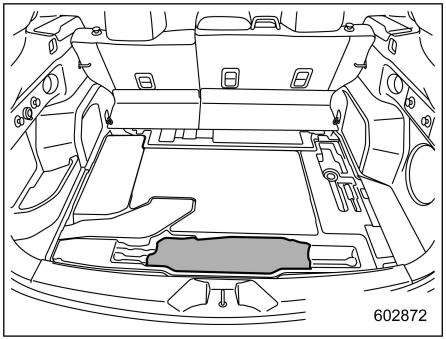

The under-floor storage compartment is located under the floor of the cargo area and can be used to store small items. To open the lid, pull the strap up.

CAUTION

- **Always keep the lid of the under-floor storage compartment closed while driving to reduce the risk of injury in the event of sudden stop or an accident.**
- **Do not store spray cans, containers with flammable or corrosive liquids or any other dangerous items in the under-floor storage compartment.**

6-18. Ashtray (If Equipped)

⚠ CAUTION

- **Do not use ashtrays as waste receptacles or leave a lighted cigarette in an ashtray. This could cause a fire.**
- **Always extinguish matches and cigarettes before putting them into the ashtray, and then close the ashtray securely. If you keep the ashtray open, the fire of the cigarette may spread to another cigarette butt and start a fire.**
- **Do not put flammable material in the ashtray.**
- **Do not leave a lot of cigarette butts in the ashtray.**

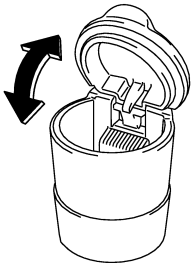

The portable ashtray can be installed in each cup holder or bottle holder. For the locations of the cup holders, refer to “Cup Holder” ☞P295. For the locations of the bottle holders, refer to “Bottle Holders” ☞P296.

When using the ashtray, open the lid of the ashtray. Fully close the lid after using the ashtray to help reduce residual smoke.

NOTE

Particles of ash and tobacco will accumulate around the hinges of the ashtray’s inner lid. Clean them off using a toothbrush or another narrow-ended implement.

7-1. Fuel 313
Fuel Requirements 313
Fuel Filler Lid and Cap 314
7-2. Preparing to Drive 317
7-3. Starting and Stopping the e-BOXER System 318
General Precautions When Starting/Stopping the e-BOXER System 318
Safety Precautions for “Keyless Access with Push-Button Start System” 318
Operating Range for Push-Button Start System 318
Starting the e-BOXER System 318
Stopping the e-BOXER System 321
When Access Key Fob Does Not Operate Properly 322
Steering Lock 322
7-4. Continuously Variable Transmission 323
Select Lever 324
Shift Lock Function 326
Selection of Manual Mode 327
Driving Tips 328
7-5. SI-DRIVE 329
Intelligent (I) Mode 329
Sport (S) Mode 329
SI-DRIVE Switch 329
7-6. Power Steering 330
7-7. Braking 331
Braking Tips 331
Brake System 331
Disc Brake Pad Wear Warning Indicators 333
7-8. ABS (Anti-Lock Brake System) 333
ABS Self-Check 334
ABS Warning Light 334
7-9. Electronic Brake Force Distribution (EBD) System 334
EBD System Malfunctions 335
7-10. Vehicle Dynamics Control System 335
Vehicle Dynamics Control System Monitor 337
To Turn On/Off the Vehicle Dynamics Control System 337
7-11. X-MODE 338
To Activate/Deactivate the X-MODE 339
Hill Descent Control Function 340
7-12. Tire Pressure Monitoring System (TPMS) (If Equipped) 341
TPMS Screen 342
TPMS Mode Setting 342
7-13. Parking Your Vehicle 343
Electronic Parking Brake 343
Parking Tips 349
7-14. Hill Start Assist System 349
7-15. Multi View Monitor (If Equipped) 351
How to Change the Display of Multi View Monitor 352
How to Cancel Multi View Monitor 354
How to View the Camera Images 355
Range of Multi View Monitor 358
Using the Camera 358
Front Cross Traffic Information (If Equipped) 359
Rear Cross Traffic Alert (RCTA) 361

7-16. Rear View Camera (Models without Multi View Monitor) 361
How to Use the Rear View Camera 362
Viewing Range on the Screen 363
Help Lines 364
7-17. Subaru Rear Vehicle Detection (SRVD) (If Equipped) 366
System Features 367
System Operation 369
SRVD Approach Indicator Light/Warning Buzzer 370
SRVD OFF Indicator 373
SRVD Warning Indicator 374
To Turn On/Off the SRVD 374
Handling of Rear Radar Sensors 374
7-18. Reverse Automatic Braking (RAB) System (If Equipped) 375
Reverse Automatic Braking (RAB) System Overview 376
Operating Conditions 378
Sonar Audible Alarm Function 381
Automatic Braking Function Operation 383
Canceling the Reverse Automatic Braking (RAB) System Operation 385
Reverse Automatic Braking (RAB) System ON/OFF Setting 385
RAB Warning Indicator 386
Handling of the Sonar Sensors 386
7-19. Driver Monitoring System (If Equipped) 387
User Recognition Function 391
Inattentive/Drowsy Driving Warning 393
Driver Monitoring System Indicator/Warning 395
Using the Driver Monitoring System 396
Registering and Deleting a User 398
Driver Monitoring System ON/OFF Settings 398
How to Get the Source Code That Uses Open Source Software 399

7-1. Fuel

■ Fuel Requirements

⚠ CAUTION

- **Use of a fuel which is low in quality or use of an inappropriate fuel additive may cause damage to the engine and/or fuel system.**
- **Do not let fuel spill on the exterior surfaces of the vehicle. Because fuel may damage the paint, be sure to wipe off any spilled fuel quickly. Paint damage caused by spilled fuel is not covered under the SUBARU Limited Warranty.**
- **The neck of the fuel filler pipe is designed to accept only an unleaded petrol filler nozzle. Under no circumstances should leaded petrol be used because it will damage the emission control system and may impair driveability and fuel economy. Also, this can increase maintenance costs.**

▼ For Australia

▽ Fuel type

Unleaded petrol only.

▽ Required Research Octane Number (RON)

91 or higher is recommended.

For optimum engine performance and driveability, it is recommended that you use premium grade unleaded petrol.

▽ Use of ethanol blended petrol

SUBARU allows the use of ethanol blended petrol if the ethanol content is up to 10%. Make sure that the ethanol blended petrol to be used has a Research Octane Number that follows the above.

▼ For Europe

▽ Fuel type

Unleaded petrol only.

▽ Required Research Octane Number (RON)

95 or higher is recommended.

If unleaded petrol with an octane rating of 95 or higher is not available, unleaded petrol with an octane rating of 90 or higher may be used.

▽ Use of ethanol blended petrol

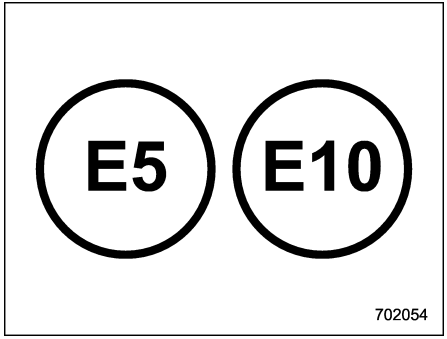

When you find these types of fuel labels at the petrol station, use only the fuel with one of the above labels.

SUBARU allows the use of ethanol blended petrol if the ethanol content is up to 10%. Make sure that the ethanol blended petrol to be used has a Research Octane Number that follows the above.

▼ For other areas

▽ Fuel type

Unleaded petrol only.

▽ Required Research Octane Number (RON)

95 or higher is recommended.

If unleaded petrol with an octane rating of

– CONTINUED –

95 or higher is not available, unleaded petrol with an octane rating of 90 or higher may be used.

▽ **Use of ethanol blended petrol**

SUBARU allows the use of ethanol blended petrol if the ethanol content is up to 15%. Make sure that the ethanol blended petrol to be used has a Research Octane Number that follows the above.

▼ **In areas where the impurity content in the fuel is high**

Add **a bottle** of genuine SUBARU fuel additive to the fuel every 15,000 km (9,000 miles). For further details refer to an authorized SUBARU dealer.

■ Fuel Filler Lid and Cap

▼ **Locations of the fuel filler lid**

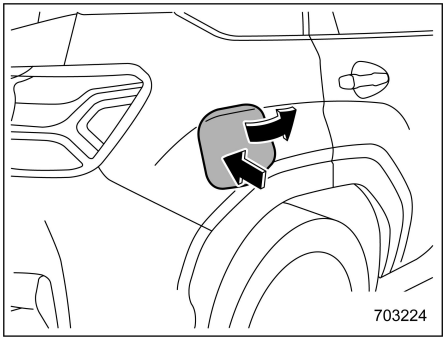

▼ **Refueling**

Only one person should be involved in refueling. Do not allow others to approach the area of the vehicle near the fuel filler pipe while refueling is in progress.

Be sure to observe any other precautions that are posted at the service station.

1. Before refueling, stop the vehicle, then turn off the ignition switch to turn off all the electrical components. At this time, the fuel filler lid also unlocks.

NOTE

When you lock the door, the fuel filler lid also locks. To unlock the fuel filler lid, perform one of the operations below.

- **Press the unlock button on the key fob.**
- **Press the unlock side of the power door locking switch.**

2. Push the rear side of the fuel filler lid.
3. The fuel filler lid opens automatically. Open it further by hand.

⚠ WARNING

Before opening the fuel filler cap, first touch the vehicle body or a metal portion of the fuel pump or similar object to discharge any static electricity that may be present on your body. If your body is carrying an electrostatic charge, there is a possibility that an electric spark could ignite the fuel, which could burn you. To avoid acquiring a new static electric charge, do not get back into the vehicle while refueling is in progress.

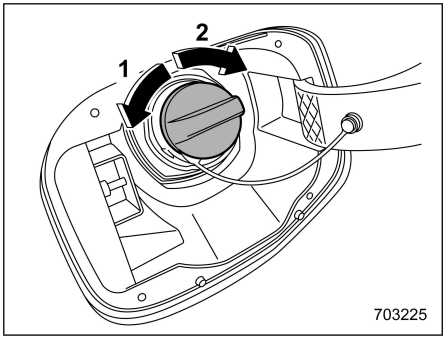

1 Open
2 Close

4. Remove the fuel filler cap by turning it slowly counterclockwise.

WARNING

- **Fuel vapor is highly flammable. Before refueling, always turn the ignition switch to the "OFF" position first and then close all vehicle doors and windows. Make sure that there are no lighted cigarettes, open flames or electrical sparks in the adjacent area. Only handle fuel outdoors. Quickly wipe up any spilled fuel.**
- **When opening the cap, grasp it firmly and turn it slowly to the left. Do not remove the cap quickly. Fuel may be under pressure and spray out of the fuel filler neck, especially in hot weather. If you hear a hissing sound while you are removing the cap, wait for the sound to stop and then slowly open the cap to prevent fuel from spraying out and creating a fire hazard.**

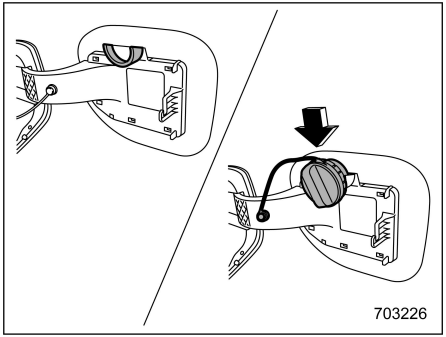

5. Set the fuel filler cap on the cap holder inside the fuel filler lid.

WARNING

- **When refueling, insert the fuel nozzle securely into the fuel filler pipe. If the nozzle is lifted or not fully inserted, its automatic stopping mechanism may not function, causing fuel to overflow the tank and creating a fire hazard.**
- **Stop refueling when the automatic stop mechanism on the fuel nozzle activates. If you continue to add fuel, temperature changes or other conditions may cause fuel to overflow from the tank and create a fire hazard.**

6. Stop filling the tank after the fuel filler pump automatically stops. Do not add any more fuel.
7. Put the cap back on and turn it clockwise until you hear a clicking noise. Be certain not to catch the tether under the cap while tightening.

CAUTION

Make sure that the cap is tightened until it clicks to prevent fuel spillage in the event of an accident.

8. Close the fuel filler lid completely.

CAUTION

If you spill any fuel on the painted surface, rinse it off immediately. Otherwise, the painted surface

– CONTINUED –

could be damaged.

NOTE

You will see the "⛽▶" sign in the fuel gauge. This indicates that the fuel filler lid is located on the right side of the vehicle.

⚠ CAUTION

- **Never add any cleaning agents to the fuel tank. The addition of a cleaning agent may cause damage to the fuel system.**
- **After refueling, turn the cap clockwise until it clicks to ensure that it is fully tightened. If the cap is not securely tightened, fuel may leak out while the vehicle is being driven or fuel spillage could occur in the event of an accident, creating a fire hazard.**
- **Do not let fuel spill on the exterior surfaces of the vehicle. Because fuel may damage the paint, be sure to wipe off any spilled fuel quickly. Paint damage caused by spilled fuel is not covered under the SUBARU Limited Warranty.**
- **We recommend that you always use a genuine SUBARU fuel filler cap. If you use the wrong cap, it may not fit or have proper venting and your fuel tank and emission control system may be damaged. It could also lead to fuel spillage and a fire.**
- **Immediately put fuel in the tank whenever the low fuel warning light illuminates. Engine misfires as a result of an empty tank could cause damage to the engine. Continuing to operate your vehicle at an extremely low fuel level may result in a reduction of engine performance.**

▼ If the fuel filler lid cannot be opened

If the fuel filler lid cannot be opened due to a malfunction or a dead battery, it can be opened from the cargo area.

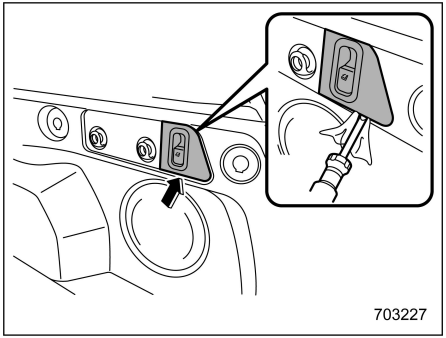

1. Cover the tip of a flat-head screwdriver with vinyl tape or cloth so that it will not scratch. Remove the access cover at the right-side of the cargo area trim using a flat-head screwdriver.

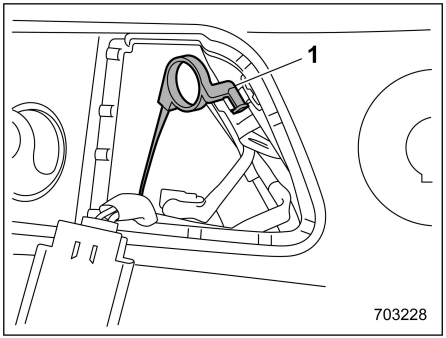

1 Clip

2. Remove the clip from the trim.

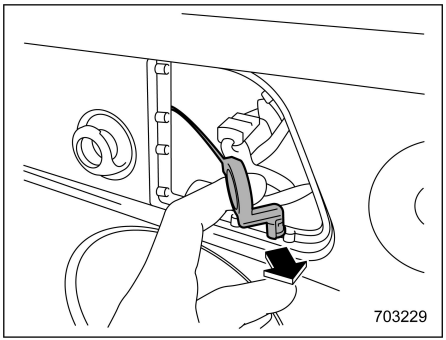

3. Pull the clip to unlock the fuel filler lid.

7-2. Preparing to Drive

You should perform the following checks and adjustments every day before you start driving.

1. Check that all windows, mirrors, and lights are clean and unobstructed.
2. Check the appearance and condition of the tires. Also check tires for proper inflation.
3. Look under the vehicle for any sign of leaks.
4. Check that no small animals enter the engine compartment.
5. Check that the hood and rear gate are fully closed.
6. Check the adjustment of the seat.
7. Check the adjustment of the inside and outside mirrors.
8. Fasten your seatbelt. Check that your passengers have fastened their seatbelts.
9. Check the operation of the warning and indicator lights when the ignition switch is turned to the “ON” position.
10. Check the gauges, indicator and warning lights after starting the e-BOXER system.

⚠ CAUTION

Trapping small animals in the cooling fan and the drive belt of the engine may result in a malfunction. Check that no small animal enters the engine compartment and under the vehicle before starting the e-BOXER system.

NOTE

- **Engine oil, engine coolant, brake fluid, washer fluid and other fluid levels should be checked daily, weekly or at fuel stops.**
- **When towing a trailer, refer to “Trailer Towing” ☞P416.**

7-3. Starting and Stopping the e-BOXER System

■ General Precautions When Starting/Stopping the e-BOXER System

⚠ WARNING

- **Never start the e-BOXER system from outside the vehicle. It may result in an accident.**
- **Do not leave the e-BOXER system running in locations with poor ventilation, such as a garage and indoors. The exhaust gas may enter the vehicle or indoors, and it may result in carbon monoxide poisoning.**
- **Do not start the e-BOXER system near dry foliage, paper, or other flammable substances. The exhaust pipe and exhaust emissions can create a fire hazard at high temperatures.**

⚠ CAUTION

- **If the e-BOXER system is stopped during driving, the catalyst may overheat and burn.**
- **When starting the e-BOXER system, be sure to sit in the driver's seat.**

NOTE

- **Avoid rapid racing and rapid acceleration immediately after the e-BOXER system has started.**
- **After the engine starts, the engine speed will be kept high.**
- **On rare occasions, it may be difficult to start the engine depending on the fuel and the usage condition (repeated driving of a distance in which the engine has not warmed up sufficiently). In such a case, it is recommended that you change to a different brand of fuel.**
- **On rare occasions, transient knocking may be heard from the engine when the accelerator is operated rapidly such as a rapid start-up and a rapid acceleration. This is not a malfunction.**
- **Do not shift the select lever while the e-BOXER system READY indicator light is flashing.**
- **The e-BOXER system may not start immediately after the terminal of the 12 V battery has been reconnected when replacing the 12 V battery, etc. Turn on the ignition switch, wait at least 10 seconds, and then start the e-BOXER system.**
- **The remaining power of the high voltage battery may decrease when the e-BOXER system has been stopped for a long time in a state where it is sufficiently charged. However, this is a result of the high voltage battery self-discharge and is not a malfunction.**

■ Safety Precautions for "Keyless Access with Push-Button Start System"

Refer to "Safety Precautions" ☞P128.

■ Operating Range for Push-Button Start System

Refer to "Operating Range for Push-Button Start System" ☞P172.

■ Starting the e-BOXER System

⚠ WARNING

- **There are some general precautions when starting the e-BOXER system. Carefully read the precautions described in "General Precautions When Starting/Stopping the e-BOXER System" ☞P318.**

- If the indicator on the push-button ignition switch flashes in green after the e-BOXER system has started, never drive the vehicle. The steering is still locked, and it may result in an accident.

CAUTION

- When the operation indicator on the push-button ignition switch is flashing in orange, there may be a malfunction with the vehicle. We recommend that you contact a SUBARU dealer immediately.
- If the indicator on the push-button ignition switch is flashing in green after the e-BOXER system has started, it means that the steering is still locked. Depress the brake pedal while moving the steering wheel to the right and left, and press the push-button ignition switch.
- Do not continue pushing the push-button ignition switch for more than 10 seconds. Doing so could cause a malfunction. If the e-BOXER system does not start, stop pushing the push-button ignition switch. Instead, press the push-button ignition switch without depressing the brake pedal to switch the power status to "OFF". Wait 10 seconds, and then push the push-button ignition switch to start the e-BOXER system.

NOTE

- After the engine starts, the engine speed will be kept high.
- When the push-button ignition switch is pressed while depressing the brake pedal, the e-BOXER system can be started regardless of the status of the push-button ignition switch.
- If the immobilizer indicator light illuminates when you attempt to start the e-BOXER system but the e-BOXER system does not start, press the push-button ignition switch to switch the power to "OFF" and then try to start the e-BOXER system again.
- If the e-BOXER system does not start, press the push-button ignition switch without depressing the brake pedal to switch the power to "OFF". Then, while depressing the brake pedal more forcefully, press the push-button ignition switch.
- The engine start procedures may not function depending on the radio wave conditions around the vehicle. In such a case, refer to "Starting the e-BOXER system" ☞P450.
- If the 12 V battery is discharged, the steering cannot be unlocked. Charge the 12 V battery.

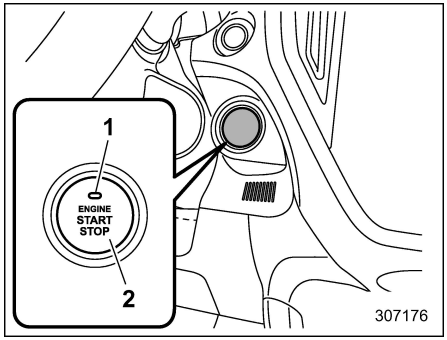

Left-hand drive models

– CONTINUED –

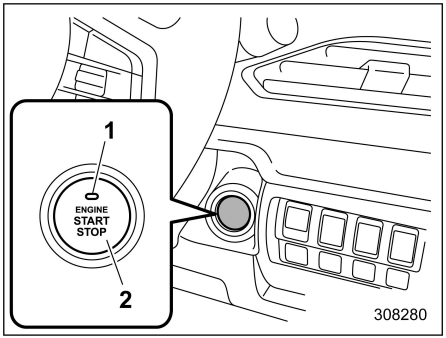

Right-hand drive models
1 Operation indicator
2 Push-button ignition switch

The starting procedure for the e-BOXER system is as follows.

1. Carry the access key fob, and sit in the driver's seat.
2. Apply the parking brake.
3. Make sure the select lever is in the "P" position.
4. Depress the brake pedal until the operation indicator on the push-button ignition switch turns green.
5. While depressing the brake pedal, press the push-button ignition switch.
6. Depress and hold the brake pedal until the e-BOXER system starts. The e-BOXER system READY indicator light flashes and then illuminates when the e-BOXER system starts to activate.

NOTE

- **While pressing the select lever button, the indicator on the push-button ignition switch will not turn green even when the select lever is in the "P" position.**
- **In case the e-BOXER system does not start by the normal e-BOXER system start procedure, move the select lever to the "P" position, and switch the power to "ACC". Depress the brake pedal, and press the push-button ignition switch for at least 15 seconds. The e-BOXER system may start. Only use this e-BOXER system start procedure in case of emergency.**
- **When the e-BOXER system does not start, the brake pedal may feel stiff. In such a case, depress the brake pedal more forcefully than usual. Check that the operation indicator on the push-button ignition switch turns green, and press the push-button ignition switch to start the e-BOXER system.**
- **When starting the e-BOXER system, the flashing time of the e-BOXER system READY indicator light may be long. Leave the vehicle as it is until the e-BOXER system READY indicator light is steady on, as steady means the vehicle is able to move.**
- **In the event that the e-BOXER system READY indicator light does not come on even after performing the proper procedures for starting the vehicle, we recommend that you contact a SUBARU dealer immediately.**
- **When the high voltage battery is extremely cold (below approximately −30°C (−22°F)) under the influence of the outside temperature, it may not be possible to start the e-BOXER system. At this time, when you press the push-button ignition switch, the e-BOXER system READY indicator light will flash for about 10 seconds. In this case, try to start the e-BOXER system again after the temperature of the high voltage battery increases due to the outside temperature increase etc.**

Stopping the e-BOXER System

1. Stop the vehicle completely.
2. Move the select lever to the “P” position.
3. Press the push-button ignition switch. The e-BOXER system will stop, and the power will be switched off.

WARNING

- **Do not touch the push-button ignition switch during driving.**

  When the push-button ignition switch is operated as follows, the e-BOXER system will stop.

  – The switch is pressed and held for 3 seconds or longer.

  – The switch is pressed briefly 3 times or more in succession.

  When the e-BOXER system stops, the brake booster will not function. A greater foot pressure will be required on the brake pedal.

  The power steering system will not operate either. A greater force will be required to steer, and it may result in an accident.

- **If the e-BOXER system stops during driving, do not operate the push-button ignition switch or open any of the doors until the vehicle is stopped in a safe location. It is dangerous because the steering lock may be activated. Stop the vehicle in a safe place, and we recommend that you contact a SUBARU dealer immediately.**

CAUTION

- **Do not stop the e-BOXER system while the select lever is in a position other than the “P” position.**
- **If the e-BOXER system is stopped while the select lever is in a position other than the “P” position, the power will be in “ACC”. If the vehicle is left in this condition, the 12 V battery may be discharged.**

NOTE

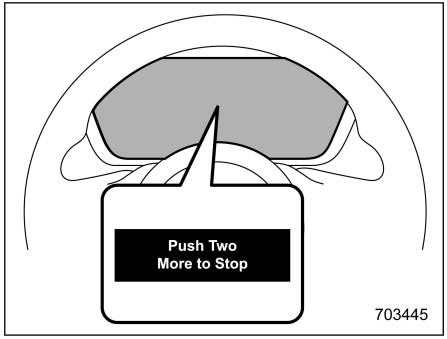

- **If you press the push-button ignition switch while driving, the emergency e-BOXER system stop interrupt screen alerts the driver by messages on the combination meter display and beeps.**
- **Although you can stop the e-BOXER system by operating the push-button ignition switch, do not stop the e-BOXER system during driving except in an emergency.**

– CONTINUED –

■ When Access Key Fob Does Not Operate Properly

Refer to “Access Key Fob – If Access Key Fob Does Not Operate Properly” ☞P449.

■ Steering Lock

After stopping the e-BOXER system and any door including the rear gate is opened, the steering wheel will be locked due to the steering lock function.

When the e-BOXER system is restarted, the steering lock will be automatically released.

▼ When the steering lock cannot be released

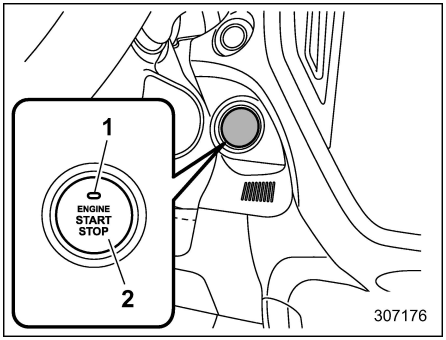

Left-hand drive models

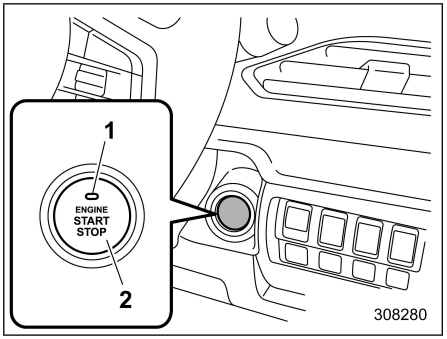

Right-hand drive models

1 Operation indicator
2 Push-button ignition switch

When you cannot restart the e-BOXER system due to the steering lock, check the status of operation indicator and perform the following steps.

Operation indicator flashing in green:

1. Check that the select lever is set in the “P” position.
2. Depress the brake pedal and keep it.
3. Press the push-button ignition switch while turning the steering wheel left and right.

Operation indicator flashing in orange:

There may be a malfunction in the steering lock function. We recommend that you contact a SUBARU dealer immediately.

7-4. Continuously Variable Transmission

The continuously variable transmission is electronically controlled and provides an infinite number of forward speeds and 1 reverse speed. It also has a manual mode.

WARNING

Do not shift from the "P" or "N" position into the "D" or "R" position while depressing the accelerator pedal. This may cause the vehicle to lurch forward or backward.

CAUTION

- **Observe the following precautions. Failure to observe these precautions could cause damage to the transmission.**
  - **Shift into the "P" or "R" position only after the vehicle has completely stopped.**
  - **Do not shift from the "D" position into the "R" position or vice versa until the vehicle has completely stopped.**
- **Never move the vehicle rearward by inertia with the select lever set in a forward driving position or move the vehicle forward by inertia with the select lever set in the "R" position. Doing so may result in an unexpected accident or malfunction.**
- **When parking the vehicle, first securely apply the parking brake and then place the select lever in the "P" position. Do not park for a long time with the select lever in any other position as doing so could result in a dead battery.**

NOTE

- **When the engine coolant temperature is still low, the transmission will shift at higher engine speeds than when the coolant temperature is sufficiently high in order to shorten the warm-up time and improve driveability. The gearshift timing will automatically shift to the normal timing after the engine has warmed up.**
- **Immediately after transmission fluid is replaced, you may feel that the transmission operation is somewhat unusual. This results from invalidation of data which the on-board computer has collected and stored in memory to allow the transmission to shift at the most appropriate times for the current condition of your vehicle. Optimized shifting will be restored as the vehicle continues to be driven for a while.**
- **When driving under continuous heavy load conditions such as towing a camper or climbing a long, steep hill, the engine speed, vehicle speed and air conditioning system cooling performance may automatically be reduced. This is not a malfunction. This phenomenon results from the engine control function maintaining the cooling performance of the vehicle. The engine and vehicle speed will return to a normal speed when the engine is able to maintain the optimum cooling performance after the heavy load decreases. Driving under a heavy load must be performed with extreme care. Do not try to pass a vehicle in front when driving on an uphill slope while towing.**
- **Place the shift boot to the original position after it is lifted. If the select lever is operated with the shift boot in the rolled up position, the shift boot may have tension and it may disturb the select lever operation.**

– CONTINUED –

■ Select Lever

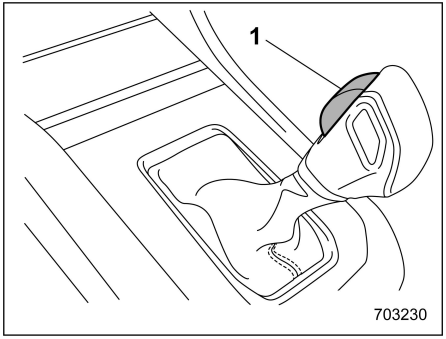

1 Select lever button

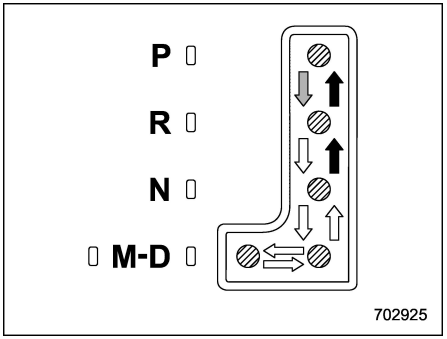

⇨ : With the brake pedal depressed, shift while pressing the select lever button in

➡ : Shift while pressing the select lever button in

⇨ : Shift without pressing the select lever button

The select lever has four positions, “P”, “R”, “N”, “D” and also has an “M” position for using the manual mode.

NOTE

- **To protect the engine while the select lever is in the “P” or “N” position, the engine is controlled so that the engine speed may not become too high even if the accelerator pedal is depressed hard.**
- **When you change the select lever position, make sure to move the select lever firmly to the selected position.**

▼ P (Park)

This position is for parking the vehicle and starting the e-BOXER system. In this position, the transmission is mechanically locked to prevent the vehicle from rolling freely.

When you park the vehicle, first apply the parking brake, then shift into the “P” position. Do not hold the vehicle with only the mechanical friction of the transmission.

To shift the select lever from the “P” to any other position, you should depress the brake pedal fully then move the select lever. This prevents the vehicle from lurching when it is started.

▼ R (Reverse)

This position is for backing the vehicle. To shift from the “N” to “R” position, stop the vehicle completely then move the lever to the “R” position while pressing the select lever button in.

When the ignition switch has been turned to the “ACC” position, the movement of the select lever from the “N” to “R” position is only possible by depressing the brake pedal. For details, refer to “Shift Lock Function” ☞P326.

▼ N (Neutral)

In this position, the transmission is neutral, meaning that the wheels and transmission are not locked. Therefore, the vehicle will roll freely, even on the slightest incline unless the parking brake or foot brake is applied.

Avoid coasting with the transmission in neutral. Engine braking and regenerative braking have no effect in this condition.

⚠ CAUTION

- **If the shift position is in "N", the high voltage battery will not be charged. To prevent the battery from discharging, avoid leaving the "N" position selected for an extended period of time.**
- **Do not drive the vehicle with the select lever in the "N" (neutral) position. Otherwise, the regenerative braking system will not be able to charge the high voltage battery.**

▼ D (Drive)

This position is for normal driving. The transmission shifts automatically and continuously into a suitable gear according to the vehicle speed and the acceleration you require. Also, while driving up and down a hill, the transmission assists and controls the driving performance and engine braking while corresponding to the road grade.

When more acceleration is required in "D" position, depress the accelerator pedal fully to the floor and hold that position. When the accelerator pedal is depressed heavily, the power of the high voltage battery is added to that of the gasoline engine via the electric motor (traction motor).

▽ Temporary manual shift mode

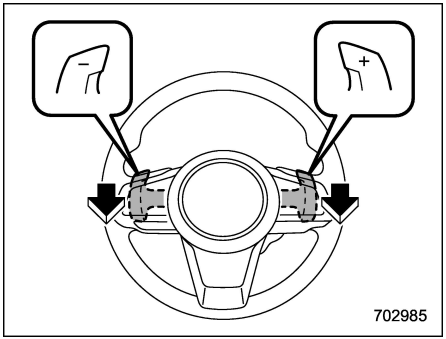

If you operate one of the shift paddles behind the steering wheel while driving in the "D" position, you will be able to temporarily shift to any gear position using the shift paddles.

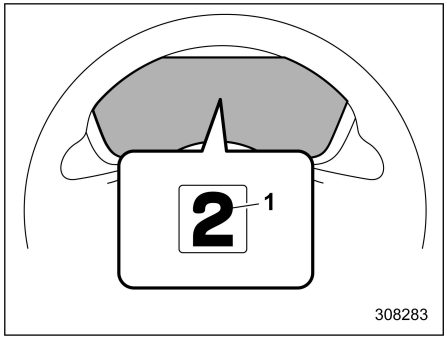

1 Gear position indicator

When the temporary manual shift mode is selected, the gear position indicator on the combination meter illuminates. The gear position indicator shows the currently selected gear in the 1st-to-6th gear range. Once the vehicle speed stabilizes, the transmission will switch from the manual mode back to the "D" position for normal driving.

When you pull and hold the shift paddle "+" for several seconds, temporary manual shift mode will be canceled.

NOTE

- **When you switch to temporary manual shift mode, the first gear position is "4".**

– CONTINUED –

- **In addition to pressing the brake pedal when going downhill, it is recommended to use engine braking by downshifting.**
- **In the following situations, temporary manual shift is canceled.**
  - **The vehicle is stopped.**
  - **You press the accelerator pedal for longer than several seconds while traveling in a straight line or on a gentle curve.**
  - **You put the select lever in a position other than "D".**
- **The time required to release the temporary manual shift mode varies depending on the driving conditions at the time of operation.**
- **In order to ensure safety and appropriate driving performance, downshifting operations are restricted. If the paddle shift lever is operated at a vehicle speed at which downshifting is not possible, a beep will sound to alert the driver that the downshift cannot be made.**

■ Shift Lock Function

The shift lock function helps prevent the improper operation of the select lever.

- The select lever cannot be operated unless the ignition switch is turned to the "ON" position and the brake pedal is depressed.
- The select lever cannot be moved from the "P" position to any other position before the brake pedal is depressed. Depress the brake pedal first, and then operate the select lever.
- Only the "P" position allows you to turn the push-button ignition switch to the "OFF" position.
- If the ignition switch is turned to the "ACC" position while the select lever is in the "N" position, the select lever may not be moved to the "P" position without depressing the brake pedal and pressing the select lever button.

▼ Shift lock release

If the select lever cannot be operated, turn the ignition switch back to the "ON" position then move the select lever to the "P" position with the select lever button pressed and the brake pedal depressed.

If the select lever does not move after performing the above procedure, check and confirm the following and release the shift lock accordingly.

- **When the select lever cannot be shifted from "P" to "N":**

Refer to "Shift lock release using the shift lock release portion" ☞P326.

- **When the select lever cannot be shifted from "N" to "R" or "P":**

Place the ignition switch in the "ACC" position, then move the select lever to the "P" position with the brake pedal depressed.

If the select lever still does not move, refer to "Shift lock release using the shift lock release portion" ☞P326.

If the shift lock cannot be released without using the shift lock release button in the above cases, there may be a malfunction in the shift lock system or the vehicle control system.

We recommend that you contact a SUBARU dealer for an inspection as soon as possible.

▼ Shift lock release using the shift lock release portion

Perform the following procedure to release the shift lock.

1. Apply the parking brake and stop the e-BOXER system.

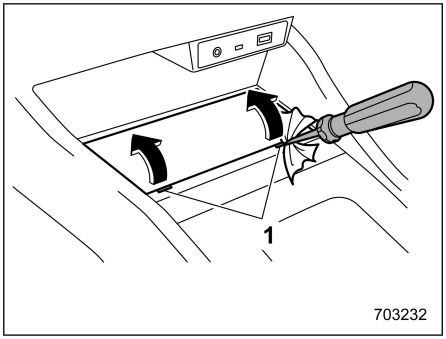

1 Slits

2. Cover the tip of a flat-head screwdriver with vinyl tape or cloth so that it will not scratch. Insert a flat-head screwdriver into the two slits and then lift the cover upward.

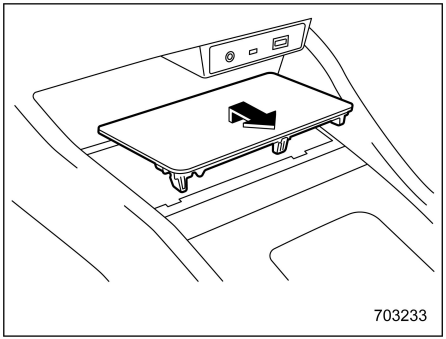

3. Remove the center tray or wireless charger.

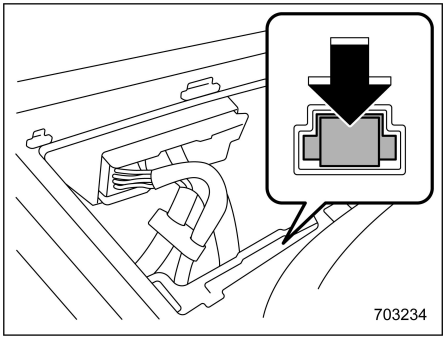

4. While depressing the brake pedal, press the shift lock release portion, and then move the select lever.

If the select lever does not move after performing the above procedure, the shift lock system may be malfunctioning. We recommend that you contact a SUBARU dealer for an inspection as soon as possible.

■ Selection of Manual Mode

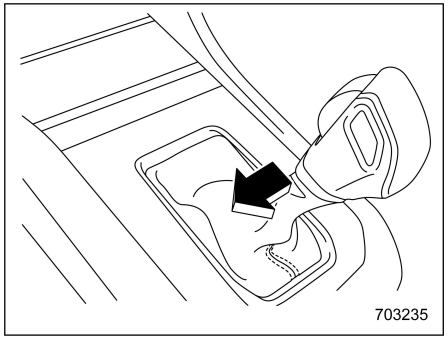

With the vehicle either moving or stationary, move the select lever from the “D” position to the “M” position to select the manual mode.

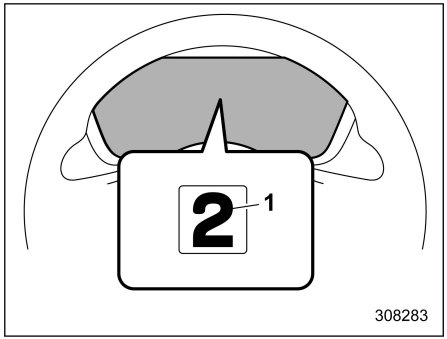

1 Gear position indicator

– CONTINUED –

When the manual mode is selected, the gear position indicator on the combination meter illuminates. The gear position indicator shows the currently selected gear in the 1st-to-6th gear range.

Gearshifts can be performed using the shift paddle behind the steering wheel.

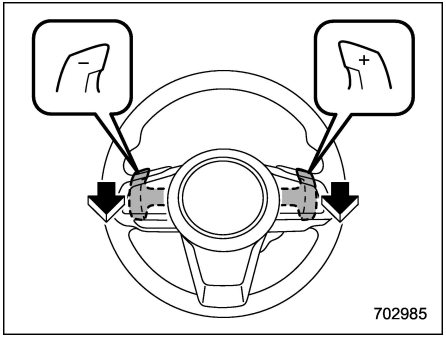

To upshift to the next higher gear position, pull the shift paddle that has "**+**" indicated on it. To downshift to the next lower gear position, pull the shift paddle that has "**–**" indicated on it.

To deselect the manual mode, return the select lever to the "D" position from the "M" position.

While driving with the select lever in the "D" position, if you change gears by operating the shift paddle, the gear position indicator illuminates and shows the current gear condition.

CAUTION

Do not place or hang anything on the shift paddles. Doing so may result in accidental gear shifting.

NOTE

Please read the following points carefully and bear them in mind when using the manual mode.

When you switch to manual mode, the first gear position is "4".

- **In order to ensure safety and appropriate driving performance, downshifting operations are restricted. If the paddle shift lever is operated at a vehicle speed at which downshifting is not possible, a beep will sound to alert the driver that the downshift cannot be made.**
- **When the gear position is "3" or less, the gears will automatically upshift depending on the engine speed.**
- **When the gear position is "4" or less and you hold the shift paddle "+" for a long time, the gears will upshift to the gear position "6".**
- **If the gear position indicator is not displayed or "D" is displayed even when the shift lever is set to the "M" position, the transmission may be malfunctioning. We recommend that you have your vehicle inspected by your SUBARU dealer.**

■ Driving Tips

- Always apply the foot or parking brake when the vehicle is stopped in the "D" or "R" position.
- Make sure to apply the parking brake when parking your vehicle. Do not hold the vehicle with only the transmission.
- Do not keep the vehicle in a stationary position on an uphill grade by using the "D" position. Use the brake instead.
- The engine may, on rare occasions, knock when the vehicle rapidly accelerates or rapidly pulls away from a standstill. This phenomenon does not indicate a malfunction.

NOTE

If the accelerator and brake pedals are depressed at the same time, driving torque may be restrained. This is not a malfunction.

7-5. SI-DRIVE

SI-DRIVE (SUBARU Intelligent Drive) works to maximize e-BOXER system performance, control and efficiency.

This system consists of the following modes:

- Intelligent (I) mode
- Sport (S) mode

Intelligent (I) mode is selected when the push-button ignition switch is turned to the “ON” position. By adjusting the SI-DRIVE switch, the character of the power unit changes.

■ Intelligent (I) Mode

▼ **For smooth, efficient performance driving**

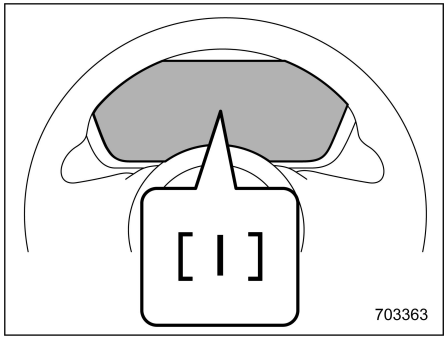

The linear acceleration characteristic of the Intelligent (I) mode is ideal for normal driving usage.

The Intelligent (I) mode provides well-balanced performance with greater fuel efficiency and smooth driveability without stress. Power delivery is moderate during acceleration for maximum fuel efficiency.

This is ideal for around-town driving and situations that do not require full power output. It provides better control in difficult driving conditions, such as slippery roads or loose surfaces, due to gentler throttle response.

■ Sport (S) Mode

▼ **For all-around performance driving**

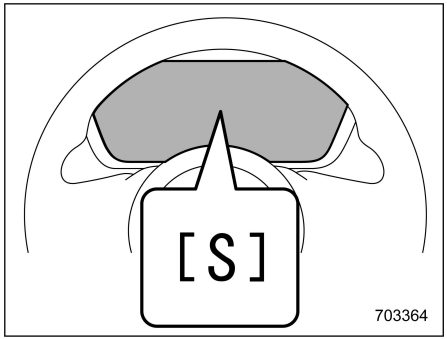

The Sport (S) mode provides the e-BOXER system power desired by those who want to make the driving experience their own personal adventure.

■ SI-DRIVE Switch

NOTE

- **If any of the SI-DRIVE indicators blink, the SI-DRIVE system may be malfunctioning. We recommend that you contact your SUBARU dealer.**
- **The default mode of the SI-DRIVE system is the Intelligent (I) mode. Once you turn off the e-BOXER system, the previous setting mode is canceled and the SI-DRIVE system**

– CONTINUED –

returns to the Intelligent (I) mode the next time you turn on the e-BOXER system.

- **If the malfunction indicator light (Check Engine light) or the e-BOXER system fail lamp illuminates, the SI-DRIVE mode changes to the Intelligent (I) mode. In this case, it is not possible to change to another mode.**
- **The SI-DRIVE mode will not be affected even if the SI-DRIVE switch is pressed while X-MODE is activated. At this time, the buzzer will sound twice.**

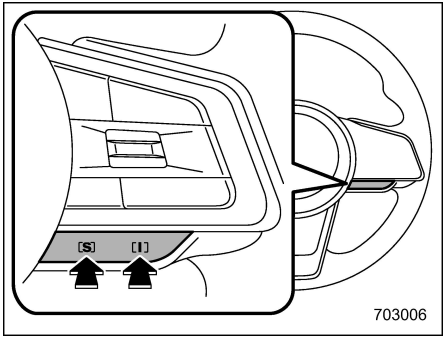

SI-DRIVE switch

To select the intelligent (I) mode, press the "I" side of the switch. To select the Sport (S) mode, press the "S" side of the switch.

7-6. Power Steering

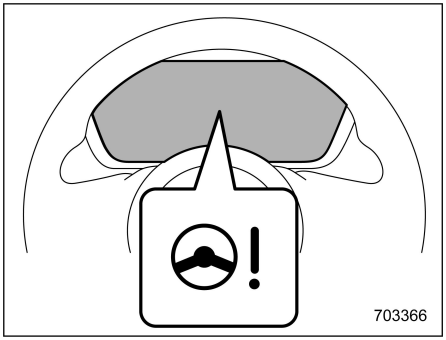

Power steering warning light

The vehicle is equipped with an electric power steering system. When the ignition switch is turned to the "ON" position, the power steering warning light on the combination meter illuminates to inform the driver that the warning system is functioning properly. Then, if the e-BOXER system started, the warning light turns off to inform the driver that the steering power assist is operational.

⚠ CAUTION

When the power steering warning light is illuminated, there may be more resistance when the steering wheel is operated. Drive carefully to the nearest SUBARU dealer and we recommend that you have the vehicle inspected immediately.

NOTE

If the steering wheel is operated in the following ways, the power steering control system may temporarily limit the power assist in order to prevent the system components, such as the control computer and drive motor, from overheating.

- **The steering wheel is operated frequently and turned sharply while the vehicle is maneuvered at extremely low speeds, such as while frequently turning the steering wheel during parallel parking.**
- **The steering wheel remains in the fully turned position for a long period of time.**

At this time, there will be more resistance when steering. However, this is not a malfunction. Normal steering force will be restored after the steering wheel is not operated for a while and the power steering control system has an opportunity to cool down. However, if the power steering is operated in a non-standard way which causes power

assist limitation to occur too frequently, this may result in a malfunction of the power steering control system.

7-7. Braking

■ Braking Tips

⚠ WARNING

Never rest your foot on the brake pedal while driving. This can cause dangerous overheating of the brakes and needless wear on the brake pads.

▼ When the brakes get wet

When driving in rain or after washing the vehicle, the brakes may get wet. As a result, brake stopping distance will be longer. To dry the brakes, drive the vehicle at a safe speed while lightly depressing the brake pedal to heat up the brakes.

▼ Use of engine braking

Remember to make use of engine braking in addition to foot braking. When descending a grade, if only the foot brake is used, the brakes may start working improperly because of brake fluid overheating, caused by overheated brake pads. To help prevent this, shift into a lower gear to get stronger engine braking.

▼ Braking when a tire is punctured

Do not depress the brake pedal suddenly when a tire is punctured. This could cause a loss of control of the vehicle. Keep driving straight ahead while gradually reducing speed. Then slowly pull off the road to a safe place.

■ Brake System

▼ Two separate circuits

Your vehicle has a dual circuit brake system. Each circuit works diagonally across the vehicle. If one circuit of the brake system should fail, the other half of the system still works. If one circuit fails, the brake pedal will go down much closer to the floor than usual and you will need to press it down much harder. And a much longer distance will be needed to stop the vehicle.

▼ Electronic brake booster

The vehicle is equipped with an electronic brake booster to provide additional braking force. Do not turn off the ignition switch while driving because that will turn off the brake booster, resulting in poor braking power.

The brakes will continue to work even when the brake booster completely stops functioning. If this happens, you will have to depress the pedal much harder than during normal braking, and the braking distance will increase.

– CONTINUED –

NOTE

When the following operations are performed, an operating sound from the electronic brake boost control module may be heard. This is not a malfunction.

- **The brake pedal was operated.**
- **The driver's door was opened.**
- **The EyeSight function was activated.**
- **Several minutes have passed after the engine stopped.**

▽ Supplemental booster function when pressure fails

If there is a malfunction in the braking system, the power for the braking will be stored by controlling the hydraulic pressure of the VDC system.

When the brake pedal is depressed while the supplemental booster function is operating, an operation sound and brake pedal vibration may be generated.

▽ Electronic brake booster warning

The brake system warning light (red) illuminates when the electronic brake booster is malfunctioning. In addition, the warning messages "Brake System" and "Check Owner's Manual" are displayed alternately on the combination meter display. If the warning light illuminates, promptly park in a safe location as soon as possible and we recommend that you contact your SUBARU dealer. Refer to "Electronic brake booster warning" ☞P189.

▼ Brake assist system

⚠ WARNING

Do not be overconfident about the brake assist. It is not a system that brings more braking ability to the vehicle beyond its braking capability. Always use the utmost care when driving regarding vehicle speed and safe distance.

⚠ CAUTION

When you need to brake suddenly, continue depressing the brake pedal strongly to bring the effect of the brake assist.

Brake assist is a driver assistance system. It assists the brake power when the driver cannot depress the brake pedal strongly and the brake power is insufficient.

Brake assist generates the brake power according to the speed at which the driver depresses the brake pedal.

NOTE

When you depress the brake pedal strongly or suddenly, the following phenomena occur. However, even though these occur, they do not indicate any malfunctions, and the brake assist system is operating properly.

- **You might feel that the brake pedal is applied by lighter force and generates a greater braking force.**
- **You might hear the sound of ABS operating from the engine compartment.**

▼ Emergency Stop Signal

The Emergency Stop Signal is a function that automatically blinks the hazard warning flasher in short intervals when the brake pedal is depressed suddenly. The rapid flashing of the hazard warning flasher cautions the vehicles behind and reduces the possibility of a collision.

⚠ CAUTION

The Emergency Stop Signal is activated in priority over the turn signal.

▽ Operating condition

The Emergency Stop Signal activates when all of the following conditions are met.

- The hazard warning flasher is off.
- The vehicle speed is 60 km/h (37 mph) or more.
- The system judges that sudden braking has occurred based on the vehicle deceleration when the brake pedal is depressed.

▽ **Automatic cancel**

The Emergency Stop Signal is canceled in either of the following circumstances.

- The hazard warning flasher is turned on.
- The brake pedal is released.
- The system judges that sudden braking has ended, based on the vehicle deceleration.

■ Disc Brake Pad Wear Warning Indicators

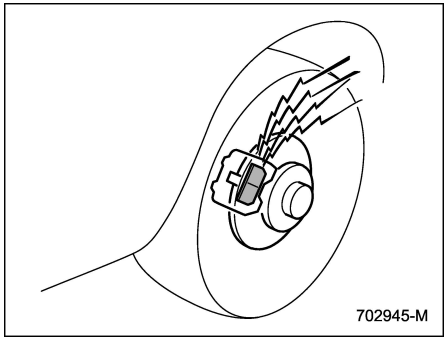

The disc brake pad wear warning indicators on the disc brakes give a warning noise when the brake pads are worn.

If you hear a squealing or scraping noise, we recommend that you have the brake pads checked and replaced by your SUBARU dealer as soon as possible. Brake disc damage may result if the pads are not replaced when needed. It is dangerous to drive the vehicle when the wear limits of the brake pads and/or those of the brake discs are exceeded.

7-8. ABS (Anti-Lock Brake System)

⚠ WARNING

Always use the utmost care in driving – overconfidence because you are driving with an ABS equipped vehicle could easily lead to a serious accident.

⚠ CAUTION

- **The ABS does not always decrease stopping distance. You should always maintain a safe following distance from other vehicles.**
- **When driving on badly surfaced roads, gravel roads, icy road, or over newly fallen snow, stopping distances may be longer for a vehicle with the ABS than one without. When driving under these conditions, therefore, reduce your speed and leave ample distance from other vehicles.**
- **When tire chains are installed, stopping distances may be longer for a vehicle with the ABS than**

– CONTINUED –

one without. Be sure to reduce your speed and maintain a safe distance from the vehicle in front.

- **When you feel the ABS operating, you should maintain constant brake pedal pressure. Do not pump the brake pedal since doing so may defeat the operation of the ABS.**

The ABS prevents the lock-up of wheels which may occur during sudden braking or braking on slippery road surfaces. This helps prevent the loss of steering control and directional stability caused by wheel lock-up.

When the ABS is operating, you may hear a chattering noise or feel a slight vibration in the brake pedal. This is normal when the ABS operates.

The ABS will not operate when the vehicle speed is below approximately 10 km/h (6 mph).

■ ABS Self-Check

You may feel a slight shock in the brake pedal and hear the operating noise of the ABS from the engine compartment just after the vehicle is started. This is caused by an automatic functional test of the ABS being carried out and does not indicate any abnormal condition.

■ ABS Warning Light

Refer to “ABS Warning Light” ☞P187.

7-9. Electronic Brake Force Distribution (EBD) System

The EBD system maximizes the effectiveness of the brakes by allowing the rear brakes to supply a greater proportion of the braking force. It functions by adjusting the distribution of braking force to the rear wheels in accordance with the vehicle’s loading condition and speed.

The EBD system is an integral part of the ABS and uses some of the ABS components to perform its function of optimizing the distribution of braking force. If any of the ABS components used by the EBD function fails, the EBD system also stops working.

When the EBD system is operating, you may hear a chattering noise or feel a slight vibration in the brake pedal. This is normal and does not indicate a malfunction.

■ EBD System Malfunctions

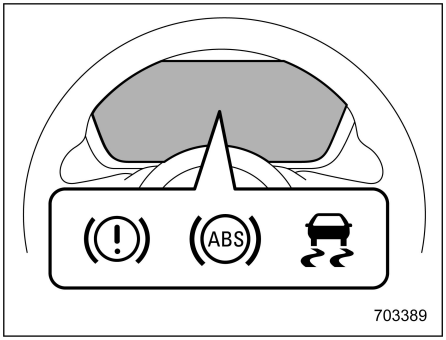

If a malfunction occurs in the EBD system, the system stops working and the following warning lights illuminate simultaneously.

- Brake system warning light (red)
- ABS warning light
- Vehicle Dynamics Control warning light

If all of the warning lights remain on even though the parking brake is released, the brake fluid level may be low or there could be a problem with the EBD system. Park the vehicle in a safe place immediately and we recommend that you contact a SUBARU dealer.

WARNING

- **Driving with the brake system warning light (red) on is dangerous. This indicates your brake system may not be working properly. If the light remains on, we recommend that you have the brakes inspected by a SUBARU dealer immediately.**
- **If at all in doubt about whether the brakes are operating properly, do not drive the vehicle. We recommend that you have your vehicle towed to the nearest SUBARU dealer for repair.**

7-10. Vehicle Dynamics Control System

WARNING

Always use the utmost care in driving – overconfidence because you are driving with a Vehicle Dynamics Control system equipped vehicle could easily lead to a serious accident.

CAUTION

- **Even if your vehicle is equipped with Vehicle Dynamics Control system, winter tires should be used when driving on snow-covered or icy roads; in addition, vehicle speed should be reduced considerably. Simply having a Vehicle Dynamics Control system does not guarantee that the vehicle will be able to avoid accidents in any situation.**
- **Activation of the Vehicle Dynamics Control system is an indication that the road being traveled on has a slippery surface; since having Vehicle Dy-**

– CONTINUED –

namics Control is no guarantee that full vehicle control will be maintained at all times and under all conditions, its activation should be seen as a sign that the speed of the vehicle should be reduced considerably.

- **Whenever suspension components, steering components, or an axle are removed from a vehicle equipped with the Vehicle Dynamics Control system, we recommend that you have an inspection of that system performed by an authorized SUBARU dealer.**
- **The following precautions should be observed in order to ensure that the Vehicle Dynamics Control system is operating properly.**
  - **All four wheels should be fitted with tires of the same size, type, and brand. Furthermore, the amount of wear should be the same for all four tires.**
  - **Keep the tire pressure at the proper level as shown on the vehicle placard attached to the driver's side door pillar.**
- **If non-matching tires are used, the Vehicle Dynamics Control system may not operate correctly.**
- **The Vehicle Dynamics Control system helps prevent unstable vehicle motion, such as skidding, using control of the brakes and engine power. Do not turn off the Vehicle Dynamics Control system unless it is absolutely necessary. If you must turn off the Vehicle Dynamics Control system, drive very carefully according to the road surface condition.**

In the event of wheelspin and/or skidding on a slippery road surface and/or during cornering and/or an evasive maneuver, the Vehicle Dynamics Control system adjusts the e-BOXER system's output and the wheels' respective braking forces to help maintain traction and directional control.

- **Traction Control Function**

The traction control function is designed to prevent spinning of the driving wheels on slippery road surfaces, thereby helping to maintain traction and directional control. Activation of this function is indicated by flashing of the Vehicle Dynamics Control operation indicator light.

- **Skid Suppression Function**

The skid suppression function is designed to help maintain directional stability by suppressing the wheels' tendency to slide sideways during steering operations. Activation of this function is indicated by flashing of the Vehicle Dynamics Control operation indicator light.

NOTE

- **The Vehicle Dynamics Control system may be considered normal when the following conditions occur.**
  - **Slight twitching of the brake pedal is felt.**
  - **The vehicle or steering wheel shakes to a small degree.**
  - **An operating noise from the e-BOXER system compartment is heard briefly when starting the e-BOXER system and when driving off after starting the e-BOXER system.**
  - **The brake pedal seems to jolt when driving off after starting the e-BOXER system.**
- **In the following circumstances, the vehicle may be less stable than it feels to the driver. The Vehicle Dynamics Control System may therefore operate. Such operation does not indicate a system malfunc-**

tion.
- **On gravel-covered or rutted roads**
- **On unfinished roads**
- **When the vehicle is towing a trailer**
- **When the vehicle is fitted with snow tires or winter tires**

- **Activation of the Vehicle Dynamics Control system will cause operation of the steering wheel to feel slightly different compared to that for normal conditions.**
- **It is always important to reduce speed when approaching a corner, even if the vehicle is equipped with Vehicle Dynamics Control.**
- **Always turn off the e-BOXER system before replacing a tire as failure to do so may render the Vehicle Dynamics Control system unable to operate correctly.**

■ Vehicle Dynamics Control System Monitor

Refer to “Vehicle Dynamics Control Warning Light/Vehicle Dynamics Control Operation Indicator Light” ☞P192 and “Vehicle Dynamics Control OFF Indicator Light” ☞P193.

■ To Turn On/Off the Vehicle Dynamics Control System

To turn the Vehicle Dynamics Control on and off, operate the center information display. Refer to “Car settings” ☞P229.

Creating an adequate driving wheel slip by deactivating the Vehicle Dynamics Control system temporarily may help to escape from the following situations. Turn the Vehicle Dynamics Control system off when necessary.

- A standing start on a steeply sloping road with a snowy, gravel-covered, or otherwise slippery surface
- Extrication of the vehicle when its wheels are stuck in mud or deep snow

When turning off the Vehicle Dynamics Control system during the e-BOXER system operation, the Vehicle Dynamics Control OFF indicator light on the combination meter illuminates. The Vehicle Dynamics Control system will be deactivated. When “Vehicle Dynamics Control” has been touched again to reactivate the Vehicle Dynamics Control system, the Vehicle Dynamics Control OFF indicator light turns off.

You should not deactivate the Vehicle Dynamics Control system except under the above-mentioned situations.

⚠ CAUTION

The Vehicle Dynamics Control system helps prevent unstable vehicle motion such as skidding using control of the brakes and engine power. Do not turn off the Vehicle Dynamics Control system unless it is absolutely necessary. If you must turn off the Vehicle Dynamics Control system, drive very carefully based on the road surface condition.

NOTE

- **When “Vehicle Dynamics Control” has been touched to deactivate the Vehicle Dynamics Control system, the Vehicle Dynamics Control system automatically reactivates itself the next time the ignition switch is turned to the “OFF” position and the e-BOXER system is restarted.**
- **When “Vehicle Dynamics Control” has been touched to deactivate the Vehicle Dynamics Control system, the vehicle’s running performance is comparable with that of a vehicle that does not have a Vehicle Dynamics Control system. Do not deactivate the Vehicle Dynamics Control system except when absolutely**

– CONTINUED –

necessary.

- Even when the Vehicle Dynamics Control system is deactivated, components of the brake control system may still activate. When the brake control system is activated, the Vehicle Dynamics Control operation indicator light flashes.

7-11. X-MODE

WARNING

- Always use the utmost care in driving – overconfidence because you are driving a vehicle with X-MODE could easily lead to a serious accident.
- Always use the utmost care in driving – overconfidence because you are driving a vehicle with hill descent control function could easily lead to a serious accident. Be especially careful, and depress the brake pedal if necessary when driving on extremely steep downhill, frozen, muddy or sandy roads. Failure to control the vehicle's speed may cause a loss of control and result in a serious accident.

CAUTION

- Even if your vehicle is equipped with X-MODE, winter tires should be used when driving on snow-covered or icy roads; in addition, vehicle speed should be reduced considerably. Simply having X-MODE does not guarantee that the vehicle will be able to avoid accidents in any situation.
- Activate X-MODE when you encounter a very slippery surface at low speed. However, having X-MODE is no guarantee that full vehicle control will be maintained at all times and under all conditions. When activating X-MODE, the speed of the vehicle should be reduced considerably.
- Whenever suspension components, steering components, or an axle are removed from a vehicle, we recommend that you have the system inspected by an authorized SUBARU dealer.
- Observe the following precautions in order to ensure that X-MODE is operating properly:
  - All four wheels should be fitted with tires of the same size, type, and brand. Furthermore, the amount of wear should be the same for all four tires.
  - Keep the tire pressure at the proper level as shown on the label attached to the vehicle's door pillar.

- **If the hill descent control function has operated continuously for a long time, the temperature of the brake disc may increase and the hill descent control function may be temporarily disabled. In this case, the hill descent control indicator light will disappear. When the hill descent control indicator light disappears, the hill descent control function is disabled.**

X-MODE is the integrated control system of the e-BOXER system, AWD and Vehicle Dynamics Control system, etc. for driving with bad road conditions. Using X-MODE, you can drive more comfortably even in slippery road conditions including uphill and downhill.

X-MODE has the following functions.

- **Hill descent control function:**

Using the hill descent control function, you can keep the vehicle at a consistent speed driving downhill. If the vehicle speed is likely to increase, the brake control system will be activated to adjust the vehicle speed.

- **Driving ability control:**

This mode increases the hill-climbing ability and driving ability as well as enabling smooth application of torque for easier control of the steering wheel.

■ To Activate/Deactivate the X-MODE

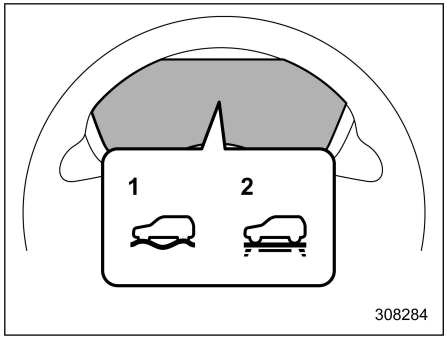

X-MODE indicator
1 DEEP SNOW/MUD mode indicator
2 SNOW/DIRT mode indicator

To activate or deactivate X-MODE, operate the center information display. Refer to “Car settings” ☞P229.

NOTE

- **Even if you try to activate X-MODE when the vehicle speed is 20 km/h (12 mph) or more, X-MODE will not be activated. At this time, a buzzer will sound twice.**
- **If the vehicle speed reaches 40 km/h (25 mph) or more while X-MODE is activated, a buzzer will sound once, and X-MODE will be deactivated. X-MODE will automatically reactivate when the vehicle speed drops below 35 km/h (22 mph).**
  - **When you use the cruise control or speed limiter (if equipped) after X-MODE is automatically deactivated, X-MODE will not be automatically reactivated when the vehicle speed drops below 35 km/h (22 mph).**
- **While the e-BOXER system is running, if any of the following conditions is met, X-MODE will be deactivated. In this case, it is not possible to activate X-MODE. Also, for models with SI-DRIVE, the mode will change to the Intelligent (I) mode and it will not be possible to change to the other modes.**
  - **The malfunction indicator light (Check Engine light) illuminates.**
  - **The ABS warning light illuminates.**
  - **The Vehicle Dynamics Control warning light illuminates.**

– CONTINUED –

- **If there is a possibility that the engine could overheat because of a temperature increase of the engine coolant, it is not possible to activate X-MODE. Even while X-MODE is activated, X-MODE will be deactivated when the engine coolant temperature increases. In this case, for models with SI-DRIVE, the SI-DRIVE mode will change to the Intelligent (I) mode.**
- **The SI-DRIVE mode will not be affected even if the SI-DRIVE switch is pressed while X-MODE is activated. At this time, the buzzer will sound twice.**
- **SNOW/DIRT is suitable for driving on a snow-covered road where the points of contact between the tires and road surface are visible, or for driving on an unpaved road.**
- **DEEP SNOW/MUD is suitable for driving on a road covered with deep snow where the points of contact between the tires and road surface are not visible, or for driving on a muddy road.**

■ Hill Descent Control Function

The hill descent control function will be in standby mode when X-MODE is activated and the vehicle speed is less than approximately 20 km/h (12 mph).

The function will operate when the vehicle speed is less than approximately 20 km/h (12 mph) and the accelerator ratio is less than approximately 10%.

The function will turn off when the vehicle speed is more than approximately 20 km/h (12 mph) and the accelerator pedal is depressed.

⚠ CAUTION

The braking power of the hill descent control function may not be sufficient when strong braking power is needed (e.g., when towing a trailer).

NOTE

- **Even while the hill descent control function is operating, you can vary the vehicle speed using the brake pedal or accelerator pedal.**
- **During braking by the hill descent control function, the stop lights will illuminate.**
- **The hill descent control function is operable regardless of the gradient of the road.**
- **The hill descent control function may be considered normal when the following conditions occur.**
  - **An operating sound is heard briefly from the engine compartment while the hill descent control function is operating.**
  - **The sensation of depressing the brake pedal is different, (harder than usual etc.) when the brake pedal is depressed during hill descent control function operation.**

▼ Hill descent control indicator light

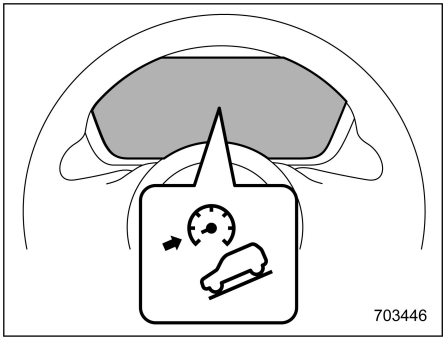

This indicator appears while the hill descent control function is in the standby mode. It flashes while the function is

operating. It will disappear when the function is in the disabled mode. When this function is changed from operational to non-operational, it will disappear when the vehicle speed reaches more than approximately 30 km/h (18 mph).

7-12. Tire Pressure Monitoring System (TPMS) (If Equipped)

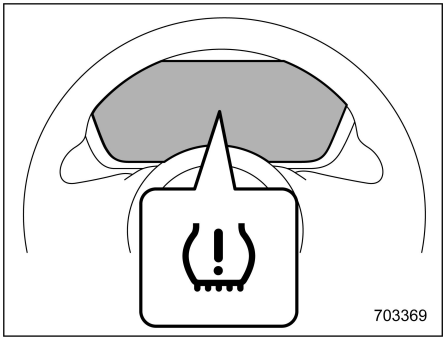

Low tire pressure warning light

The tire pressure monitoring system provides the driver with a warning message by sending a signal from a sensor that is installed in each wheel when tire pressure is severely low relative to the selected TPMS mode. Refer to “Low Tire Pressure Warning Light” ☞P185.

The tire pressure monitoring system will activate only when the vehicle is driven at speeds above 40 km/h (25 mph). Also, this system may not react immediately to a sudden drop in tire pressure (for example, a blow-out caused by running over a sharp object).

⚠ WARNING

- **If the low tire pressure warning light illuminates while driving, never brake suddenly. Instead, perform the following procedure. Otherwise an accident involving serious vehicle damage and serious personal injury could occur.**
  (1) Keep driving straight ahead while gradually reducing speed.
  (2) Slowly pull off the road to a safe place.
  (3) Check the pressure for all four tires and adjust the pressure to the COLD tire pressure shown on the tire inflation pressure label on the door pillar on the driver’s side.

  Even when the vehicle is driven a very short distance, the tires get warm and their pressures increase accordingly. Be sure to let the tires cool thoroughly before adjusting their pressures to the standard values shown on the tire inflation pressure label. Refer to “Tires and Wheels” ☞P490. The tire pressure monitoring system does not function when the

– CONTINUED –

vehicle is stationary. After adjusting the tire pressures, increase the vehicle speed to at least 40 km/h (25 mph) to start the TPMS rechecking of the tire inflation pressures. If the tire pressures are now above the severe low pressure threshold, the low tire pressure warning light should turn off a few minutes later.

If this light still illuminates while driving after adjusting the tire pressure, a tire may have significant damage and a fast leak that causes the tire to lose air rapidly. If you have a flat tire, refer to "Flat Tires" ☞P430.

- **When a replacement tire is mounted or a wheel rim is replaced without the original pressure sensor/transmitter being transferred, the low tire pressure warning light will illuminate steadily after blinking for approximately one minute. This indicates the TPMS is unable to monitor all four road wheels. We recommend that you contact your SUBARU dealer as soon as possible for tire and sensor replacement and/or system resetting.**
- **When a tire is repaired with liquid sealant, the tire pressure warning valve and transmitter may not operate properly. If a liquid sealant is used, we recommend that you contact your nearest SUBARU dealer or other qualified service shop as soon as possible. Make sure to replace the tire pressure warning valve and transmitter when replacing the tire. You may reuse the wheel if there is no damage to it and if the sealant residue is properly cleaned off. If the light illuminates steadily after blinking for approximately one minute, we recommend that you promptly contact a SUBARU dealer to have the system inspected.**

⚠ CAUTION

Do not place metal film or any metal parts under the driver's seat. This may cause poor reception of the signals from the tire pressure sensors, and the tire pressure monitoring system will not function properly.

■ TPMS Screen

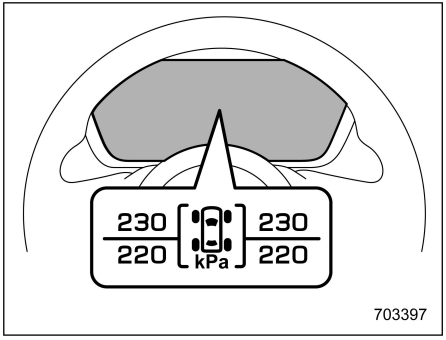

This screen displays each tire pressure. Refer to "Basic Screens" ☞P211.

■ TPMS Mode Setting

Before driving your vehicle, make sure that the TPMS mode is set to the most appropriate one based on the loading condition of the vehicle.

Set a mode under the following conditions.

- When the vehicle is stationary
- When the ignition switch is in the "ON" position

Normal mode	
Loading mode	
Towing mode	

▼ **TPMS mode selection**

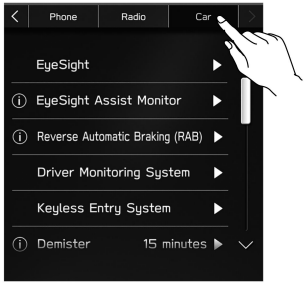

308066

1. Touch (HOME).
2. → (Settings)
3. → "Car"
4. → "TPMS Mode Setting"
5. Select the TPMS mode.

NOTE

Change the TPMS mode according to the specified pressure shown on the tire inflation pressure label.

7-13. Parking Your Vehicle

WARNING

- **Never leave unattended children or pets in the vehicle. They could accidentally injure themselves or others through inadvertent operation of the vehicle. Also, on hot or sunny days, the temperature in a closed vehicle could quickly become high enough to cause severe or possibly fatal injuries to them.**
- **Do not park the vehicle over flammable materials such as dry grass, waste paper or rags, as they may burn easily if they come near hot engine or exhaust system parts.**
- **Be sure to stop the e-BOXER system if you take a nap in the vehicle. If engine exhaust gas enters the passenger compartment, occupants in the vehicle could die from carbon monoxide (CO) contained in the exhaust gas.**

■ Electronic Parking Brake

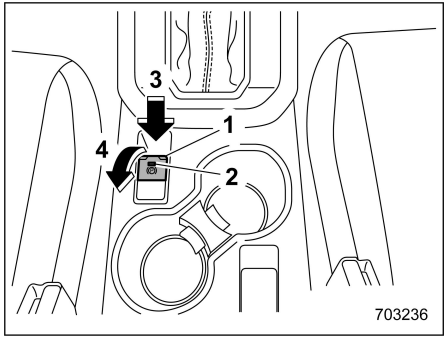

703236

1 Electronic parking brake switch
2 Indicator light
3 Release the electronic parking brake
4 Apply the electronic parking brake

WARNING

- **Before exiting the vehicle, make sure that you turn off the e-BOXER system. Otherwise, the parking brake may be released and an accident may occur.**
- **If the brake system warning light (yellow) turns on, the electronic parking brake system may be malfunctioning. Immediately stop your vehicle in a safe location, use tire stops under the tires**

– CONTINUED –

to prevent the vehicle from moving and we recommend that you contact your SUBARU dealer.

- **If the electronic parking brake is operated under the following conditions, the electronic parking brake indicator light may flash.**
  - **The brake is overheated**
  - **The vehicle is on a steep slope**

  In such cases, the vehicle may start to move which may lead to an accident. Always use the tire stops.

⚠ CAUTION

- **When the electronic parking brake cannot be applied due to a malfunction, we recommend that you contact your SUBARU dealer immediately for an inspection. If you have to park your vehicle in such conditions, perform the following procedure.**
  - **Stop your vehicle in a flat location.**
  - **Shift the select lever in the "P" position. When the select lever cannot be shifted into the "P" position, you must release shift lock. Refer to "Shift Lock Function" ☞P326.**
  - **Use tire stops under the tires to prevent the vehicle from moving.**
- **Never drive with the parking brake applied. Doing so will cause unnecessary brake pad wear. Before driving off, always make sure that the parking brake has been released and the brake system warning light (yellow) has turned off.**
- **The braking power of the electronic parking brake may not be sufficient when strong braking power is needed (e.g., when parking on a steep slope while towing a trailer).**

Your vehicle is equipped with an electronic parking brake. You can apply/release the parking brake by operating the electronic parking brake switch.

To apply: Depress the brake pedal and pull up the electronic parking brake switch.

To release: Press the electronic parking brake switch firmly while the ignition switch is in the "ON" position and the brake pedal is depressed.

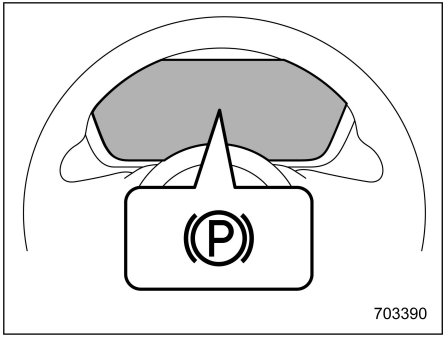

Electronic parking brake indicator light

When the parking brake is applied while the ignition switch is in the "ON" position, the following indicator lights illuminate.

- The indicator light on the electronic parking brake switch
- The electronic parking brake indicator light on the combination meter (for details, refer to "Electronic Parking Brake Indicator Light" ☞P189.)

NOTE

- **The parking brake will not be released under the following conditions even if the electronic parking brake switch is pressed.**
  - **The ignition switch is in the "ACC" or "OFF" position.**
  - **The brake pedal is not depressed.**

- **The electronic parking brake system uses motors to apply the parking brake. Therefore, operating sounds from the motors will be heard when applying or releasing the parking brake. Make sure that the motor sounds are heard when applying or releasing the parking brake.**
- **When the electronic parking brake system has a malfunction or the electronic parking brake operation is prohibited temporarily, if the electronic parking brake switch is operated, a chirp sound is heard and the electronic parking brake indicator light flashes.**
- **When you cannot release the parking brake due to, for example, a system malfunction, we recommend that you contact your SUBARU dealer and that you have your SUBARU dealer release the parking brake.**
- **If the operation of the electronic parking brake switch is stopped midway or performed extremely slowly, the system may detect an error and turn on the brake system warning light (yellow). However, this does not indicate a malfunction if the warning light turns off after operating the switch.**
- **When the electronic parking brake has not been used for a long period of time, the electronic parking brake may operate automatically after the ignition switch is turned to the "OFF" position. This occurs due to checking the proper operation of the electronic parking brake and does not indicate a malfunction.**
- **If the electronic parking brake switch is malfunctioning and the electronic parking brake cannot be released, refer to the instructions described in "Automatic release function by accelerator pedal" ☞P345.**
- **After activating the electronic parking brake, you may hear a short sound several minutes after the electronic parking brake indicator light and the indicator light on the electronic parking brake switch illuminate as the system confirms proper engagement. This sound is different from the apply and release sound.**
  This can occur:
  - **If the brakes are extremely hot.**
  - **If the car is parked on a steep incline.**
  - **If the electronic parking brake is applied after the ignition switch is turned OFF.**

  This is a normal operating sound under any of these conditions.

▼ Automatic release function by accelerator pedal

The electronic parking brake system has an automatic release function. The parking brake will be automatically released by depressing the accelerator pedal. However, the automatic release function does not operate under the following conditions.

- Any door (other than the rear gate) is open.
- The driver's seatbelt is not fastened.

If the parking brake is automatically released, the electronic parking brake indicator light and the indicator light on the electronic parking brake switch turn off.

NOTE

Even if you have applied the parking brake, the parking brake will be automatically released when the accelerator pedal is depressed.

▼ Auto Vehicle Hold function

The Auto Vehicle Hold function will automatically keep the vehicle stopped even after releasing the brake pedal when the vehicle is at a complete stop, such as at traffic signals.

– CONTINUED –

WARNING

- **Do not use the Auto Vehicle Hold function on a steep hill or slippery road. The vehicle may move even when using the Auto Vehicle Hold function, causing serious injury or accidents.**
- **Do not use the Auto Vehicle Hold function to park the vehicle. The vehicle may move unexpectedly, causing serious injury or accidents. Make sure to shift the select lever to the "P" position and apply the electronic parking brake in the following cases.**
  - **When you are going to park your vehicle.**
  - **When passengers are getting in or out of the vehicle.**
  - **When you are loading or unloading.**
- **When using the Auto Vehicle Hold function, do not release the brake pedal before the Auto Vehicle Hold indicator light illuminates. The vehicle may move unexpectedly, causing serious injury or accidents.**
- **Deactivate the Auto Vehicle Hold function in the following cases. Otherwise, the vehicle may move unexpectedly, causing serious injury or accidents.**
  - **When washing your vehicle in an automatic car wash**
  - **When being towed**
  - **When towing other vehicle**
  - **When towing a trailer**

CAUTION

When stopping on a steep slope with the Auto Vehicle Hold function turned on, the electronic parking brake may be automatically applied. Then the electronic parking brake indicator light will flash. In such a case, depress and hold the brake pedal while stopping. Otherwise, the vehicle may move.

NOTE

We recommend turning on the Auto Vehicle Hold function when stopping on an incline. If the Auto Vehicle Hold function is turned off, the vehicle may roll backward when driving off.

▽ **To turn on/off the Auto Vehicle Hold function**

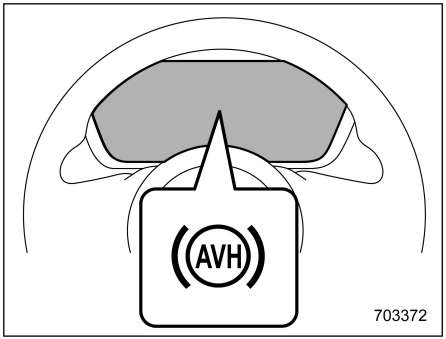

Auto Vehicle Hold indicator light

To turn the Auto Vehicle Hold function on and off, operate the center information display. Refer to "Auto Vehicle Hold (AVH) ON/OFF icon" ☞P220.

When the Auto Vehicle Hold function is turned ON, the Auto Vehicle Hold indicator light will turn on.

NOTE

- **When the electronic parking brake system has a malfunction while the Auto Vehicle Hold function is turned on, a chirp will sound, the Auto Vehicle Hold indicator light will turn off and the brake system warning light (yellow) will turn on.**

- **Every time when starting the e-BOXER system, the Auto Vehicle Hold function will be set to “OFF”.**

▽ **To operate the Auto Vehicle Hold function**

Stop the vehicle by depressing the brake pedal when all of the following conditions are met. Then the Auto Vehicle Hold function will operate.

- Driver’s door is closed.
- The driver’s seatbelt is fastened.
- The select lever is in a position other than the “P” position.

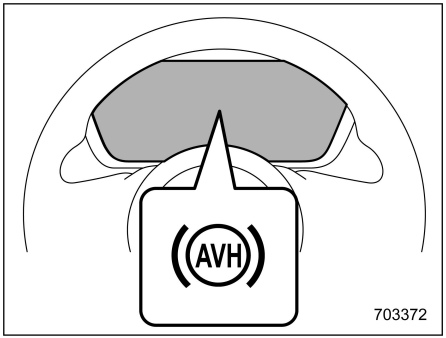

Auto Vehicle Hold indicator light

While the vehicle is kept stopped by the Auto Vehicle Hold function, the Auto Vehicle Hold indicator light will flash.

▽ **To release the Auto Vehicle Hold function**

Perform any of the following operations to release the Auto Vehicle Hold function.

- Depress the accelerator pedal.
- Depress the brake pedal again.
- Apply the electronic parking brake.
- Shift the select lever to the “P” position with the brake pedal pressed.

When the Auto Vehicle Hold function is released, the Auto Vehicle Hold indicator light will change from flashing to illuminated.

Under any of the following conditions, the Auto Vehicle Hold function will be automatically released and the electronic parking brake will be automatically applied.

- The Auto Vehicle Hold function has been in operation for 10 minutes.
- The driver’s seatbelt is unfastened.
- The ignition switch is turned to the “OFF” position.
- The vehicle is stopped on a steep slope.
- The Auto Vehicle Hold function is malfunctioning.

In such cases, the Auto Vehicle Hold indicator light will turn off and the electronic parking brake indicator light will illuminate.

▽ **Tips**

- When the electronic parking brake is automatically applied with the vehicle kept stopped by the Auto Vehicle Hold function, release the electronic parking brake by either of the following operations before starting off. Then make sure that the electronic parking brake indicator light is off.
  - Depress the accelerator pedal with the driver’s seatbelt fastened and with the doors closed.
  - Press the electronic parking brake switch with the brake pedal depressed.
- Under certain conditions, including a malfunction of the Auto Vehicle Hold, a warning buzzer will sound and a warning message will appear on the combination meter display. All warning messages should be strictly observed.
- On a steep slope, the vehicle cannot be kept stopped by the Auto Vehicle Hold function. In such a case, depress and hold the brake pedal.
- When stopping on a steep slope with the Auto Vehicle Hold function activated, the electronic parking brake may be automatically applied after stopping, then the electronic parking brake in-

– CONTINUED –

dicator light may flash. In such a case, depress and hold the brake pedal while stopped. Otherwise, the vehicle may move. When getting out of the vehicle, stop the vehicle on a flat surface, then apply the electronic parking brake.

- If the Auto Vehicle Hold indicator light does not illuminates even after touching “Auto Vehicle Hold (AVH)” with the operating conditions met, the function may have a malfunction. We recommend that you contact your SUBARU dealer for an inspection.
- You may hear a sound while the Auto Vehicle Hold function is keeping your vehicle stopped. This is normal, and does not represent a malfunction.
- When you depress the brake pedal to release the Auto Vehicle Hold function, an operation sound or vibration may be generated, or the brake pedal may return slowly. This is not a malfunction.
- While the vehicle is kept stopped by the Auto Vehicle Hold function, the brake pedal may feel stiff. However, this is not a malfunction.
- When using the Auto Vehicle Hold function, depress the brake pedal firmly. Otherwise, the Auto Vehicle Hold may not operate.

▼ Emergency brake

⚠ CAUTION

Use the emergency brake only in case of an emergency. If the emergency brake is excessively used, the brake parts will wear down faster or the brake may not work sufficiently due to brake overheating.

NOTE

- **While using the emergency brake, the electronic parking brake indicator light and the indicator light on the electronic parking brake switch illuminate and a chirp sounds.**
- **While using the emergency brake, a sound may be heard from the engine compartment. This is the operating sound of the brake that is activated by the Vehicle Dynamics Control system, and does not indicate a malfunction.**

If the foot brake has a malfunction, you can stop the vehicle by pulling the electronic parking brake switch continuously.

While applying the emergency brake, the electronic parking brake indicator light and the indicator light on the electronic parking brake switch illuminate and a chirp sounds.

▼ Electronic parking brake system warning

⚠ CAUTION

If the brake system warning light (yellow) turns on, the electronic parking brake system may be malfunctioning. Immediately stop your vehicle in the nearest safe location and we recommend that you contact your SUBARU dealer.

If a malfunction occurs in the electronic parking brake system, the brake system warning light (yellow) turns on. Refer to “Electronic Parking Brake Warning Light/ Brake System Warning Light (Yellow)” ☞P189.

■ Parking Tips

When parking your vehicle, always perform the following items.

- Apply the parking brake.
- Place the select lever in the “P” (Park) position.

Never rely on the transmission alone to hold the vehicle.

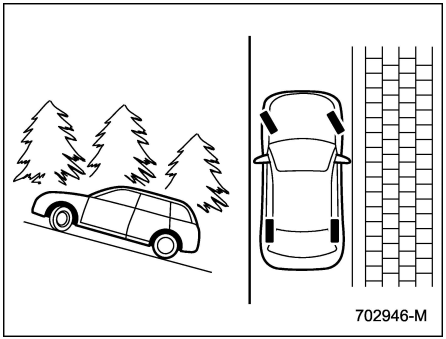

When parking on a hill, always turn the steering wheel as described here. When the vehicle is headed up the hill, the front wheels should be turned away from the curb.

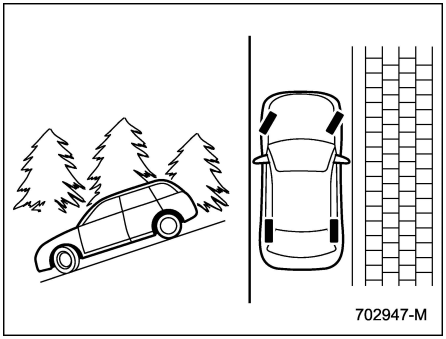

When facing downhill, the front wheels should be turned into the curb.

7-14. Hill Start Assist System

⚠ CAUTION

- **The Hill start assist system is a device only for helping the driver to START the vehicle on an uphill grade. To prevent accidents when the vehicle is parked on a slope, be sure to firmly set the parking brake. When setting the parking brake, make sure that the vehicle remains stationary when the brake pedal is released.**
- **Do not turn the ignition switch to the “OFF” position while the Hill start assist system is operating. The Hill start assist system will deactivate, causing an accident.**

The Hill start assist system is a device to make the following vehicle operations easier.

NOTE

- **The Hill start assist system will activate when the Auto Vehicle Hold function is deactivated.**
- **The Hill start assist system will deactivate when the Auto Vehicle Hold function is activated.**

– CONTINUED –

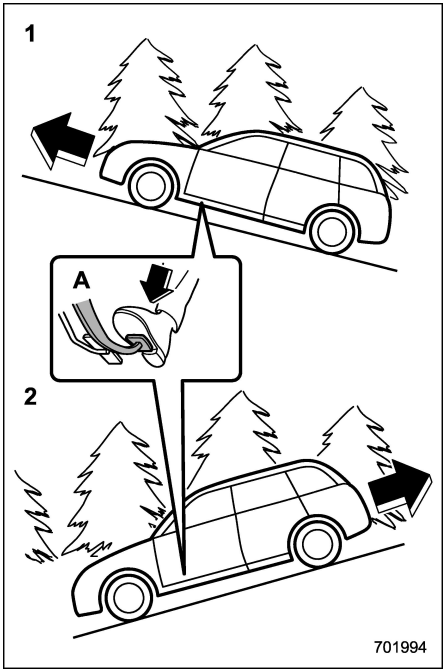

1 Starting forward facing uphill
2 Starting backward facing downhill
A Brake pedal

In both these cases, the Hill start assist system operates under the following condition.

- When the vehicle has stopped with the brake pedal depressed.

Braking power is maintained temporarily (for approximately 2 seconds) by the Hill start assist system after the brake pedal is released. The driver is therefore able to start the vehicle in the same way as on a level grade, just using the accelerator pedal.

If the braking power of the Hill start assist system is insufficient after the brake pedal is released, apply more braking power by depressing the brake pedal again.

The Hill start assist system may not operate on slight grades. Also, the Hill start assist system does not operate in the following cases.

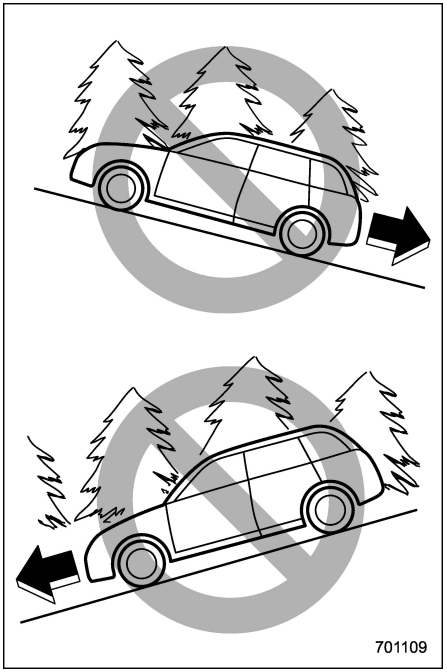

- When starting backward facing uphill
- When starting forward facing downhill
- While the parking brake is applied
- While the ignition switch is in the “ACC” or “OFF” position

- While the Vehicle Dynamics Control warning light is illuminated. Refer to "Vehicle Dynamics Control Warning Light/Vehicle Dynamics Control Operation Indicator Light" ☞P192.

When starting in reverse and using the Hill start assist system, a braking effect may be felt even after the brake pedal has been released.

CAUTION

The braking power of the Hill start assist system may not be sufficient when strong braking power is needed (e.g., when towing a trailer).

NOTE

A slight jolt may be felt when the vehicle begins to move forward after being reversed.

7-15. Multi View Monitor (If Equipped)

Multi View Monitor is a feature that displays camera images on the center information display to allow the driver to check the blind spots of the vehicle. You can use it to check the area in the front of the vehicle, when starting the vehicle or while driving, and the area to the rear of the vehicle, when backing up. You can also use it to check your surroundings when parking the vehicle.

WARNING

- **Never rely on only the Multi View Monitor when driving the vehicle. The image on the monitor screen may appear different from the vehicle's actual surroundings. If you drive the vehicle by viewing only the monitor image, a collision or an accident may occur. When driving the vehicle, always remain alert and the check the surrounding traffic directly and by using the mirrors.**
- **Do not use the Multi View Monitor in the following situations.**
  - **You are driving on a dirt road or a road covered in snow.**
  - **The camera malfunctions (e.g. the lens or bracket is broken).**
  - **The outside mirrors are retracted.**
  - **The front door is not fully closed.**
- **If the outside temperature is low, the monitor screen may become dark or the image may become dim. In particular, the image of a moving object may appear distorted or disappear from the screen. Always remain alert and check the surrounding traffic directly when driving.**

NOTE

- **If there is a Multi View Monitor system malfunction, an error message "", "" or "" is displayed on the center information display. For details, refer to "Malfunctions of the Center Information Display" ☞P452.**
- **If any of the following malfunctions occur in the rear view camera system, refer to "Malfunctions of the Center Information Display" ☞P452.**
  - **The screen becomes blue or black.**

– CONTINUED –

- **The screen does not switch to the image of the rear view camera.**
- **The camera status indicator is not displayed on the screen.**

■ How to Change the Display of Multi View Monitor

When the ignition switch is in the “ON” position, you can operate the select lever and the view monitor switch to display the image on the Multi View Monitor.

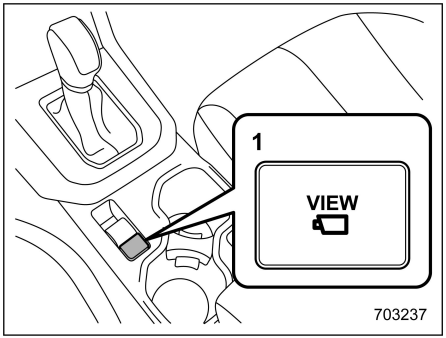

1 View monitor switch

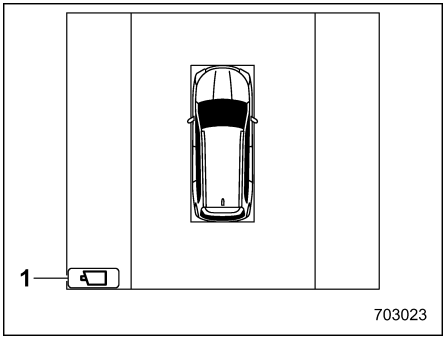

1 View icon

▼ Checking your surroundings while the vehicle is stopped

To display a 3D view of the vehicle’s surroundings, press the view monitor switch when the select lever is in the “P” position.

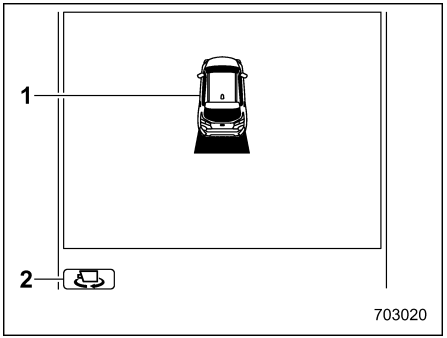

1 Vehicle icon
2 Vehicle angle icon

When the 3D view is displayed, the display angle switches clockwise from the starting position. When the view returns to the starting position, the display angle stops switching. You can also switch the display angle by pressing the vehicle angle icon on the screen.

NOTE

If you turn off the Multi View Monitor or change the screen to operate other functions, the next time the image is displayed, it will be displayed at the previously displayed angle.

▼ Check rearward

When you move the select lever to the “R” position, the “R” position indicator will be shown on the combination meter and the image of the rear view camera will be displayed on the center information display.

Pressing the view monitor switch or touching the view icon while the image of the rear camera is displayed will switch the screen view.

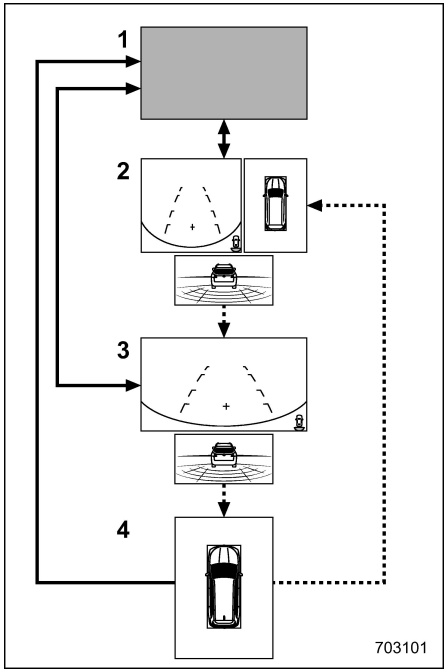

1 Original screen
2 Rear view screen/Top view screen/Reverse Automatic Braking (RAB) screen
3 Rear view screen/Reverse Automatic Braking (RAB) screen
4 Top view screen
⟶: Shift the select lever.
⇢: Touch the view icon or press the view monitor switch.

NOTE

- **If you turn off the Multi View Monitor or use it to operate another function, the next time the image is displayed, the previously displayed screen will be shown. However, if the top view screen is displayed at that time, the next time the monitor image is displayed, the rear view screen/Reverse Automatic Braking (RAB) screen will be shown.**
- **When “Rear Camera Delay Control” is on, the rear-view image will be displayed on the center information display for a certain period of time after the select lever is shifted from the “R” position to another position (other than the “P” position). To turn the function on and off, refer to “General settings” ☞P225.**

▼ Checking the front

When the view monitor switch is pressed while the select lever is in the “N” or “D” position, the front view is displayed.

– CONTINUED –

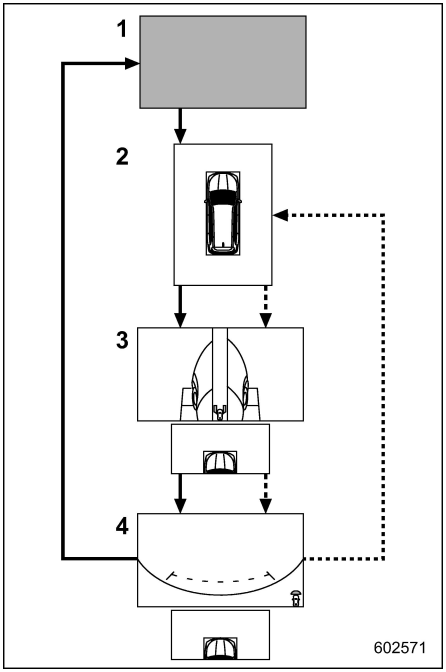

1 Original screen
2 Top view screen
3 Left-side view screen/Right-side view screen/Front-top view screen
4 Front view screen/Front-top view screen
⟶: Press the view monitor switch.
⇢: Touch the view icon.

NOTE

If you turn off the Multi View Monitor or use it to operate another function, the next time the image is displayed, the previously displayed screen will be shown.

■ How to Cancel Multi View Monitor

There are several ways to cancel Multi View Monitor.

▼ Manual cancellation

The Multi View Monitor will be canceled by either of the following operations.

- Press the view monitor switch until the original screen is displayed (when the select lever is other than the “R” position).
- Move the select lever to a position other than the “R” position (when the select lever is in the “R” position).
- Touch (car settings icon).
- Touch (HOME).
- Touch (driver profiles icon).

▼ Automatic cancellation

If any of the following conditions are met, the Multi View Monitor is canceled automatically.

- When the select lever is other than in the “R” position
  - About 3 minutes have elapsed since you pressed the view monitor switch to access the Multi View Monitor.
- When the select lever is not in the “R” or “P” position
  - The vehicle accelerates to 20 km/h (13 mph) or more.
  - You depress the brake pedal and pull up the parking brake switch to apply the parking brake.
- When the selector lever is in the “D” or “R” position
  - The select lever is shifted to the “P” position.

How to View the Camera Images

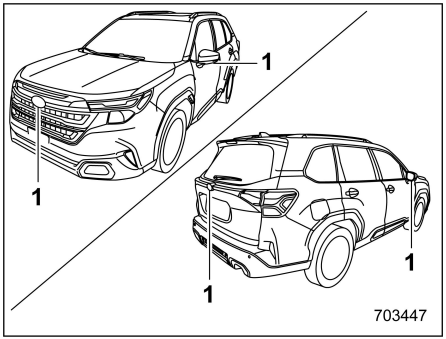

1 Cameras

The camera image displays guiding lines that provide information on the distance and direction of travel of your vehicle, as well as information on any vehicles you are approaching.

CAUTION

- **When you drive the vehicle, do not rely only on the guiding lines. Make sure that you check your surroundings directly.**
- **The position and other information provided by the guiding lines may differ from the actual distance of objects from the vehicle if it is tilting at an angle relative to the road surface due to the number of passengers or the distribution of cargo on board the vehicle.**

NOTE

- **Top view and rear view only: The display of the predicted course line linked to the steering angle can be turned on/off by operating "Steering Angle Lines" in the center information display. To turn the function on and off, refer to "General settings" ☞P225.**
- **The camera image may be hard to see in the following situations. This is not a malfunction.**
  - **Vehicle surroundings are dark (such as at night).**
  - **Ambient temperature outside the vehicle is high or low.**
  - **There is water or humidity on the lens (such as in rainy weather).**
  - **There is foreign material (such as mud) on or near the camera.**
  - **Sunlight or a headlight beam shines directly shines toward the camera lens.**
- **Under an artificial light such as a fluorescent lamp, sodium-vapor lamp or mercury lamp, the lighted portion may appear to flicker (flicker phenomenon).**
- **When the display is cold, the image may leave traces or become darker than usual, causing a difficulty in viewing the screen. When driving your vehicle, make sure that you check your surroundings directly for traffic.**
- **The following conditions may affect the appearance of the screen, but any resulting image distortion on the screen does not indicate a malfunction.**
  - **When humidity is high on a rainy day, the camera lens becomes foggy.**
  - **When driving at night, the light from a vehicle or building located ahead shines in the direction of the camera.**
  - **When the vehicle is in a dark place or when driving at night, the camera image may be adjusted to make image noise less visible.**

  Therefore, the image may look like a monochromatic image or the image colors may differ from the actual colors. The image sharpness in the center and in the four corners of the

– CONTINUED –

screen may differ. This is not a malfunction.

▼ 3D view

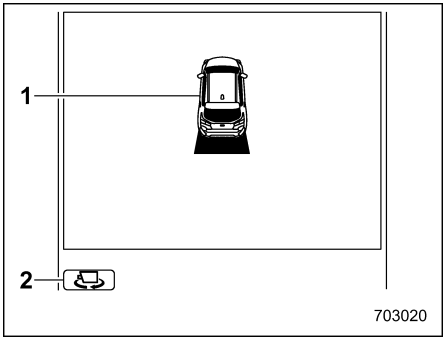

1 Vehicle icon
2 Vehicle angle icon

The 3D view displays the area around the vehicle.

▼ Top view

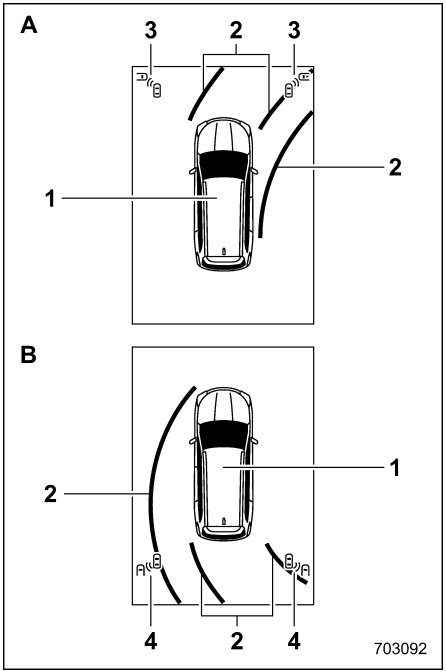

A When the select lever is in the “D” or “M” position.
B When the select lever is in the “R” position.
1 Vehicle icon
2 Predicted line
3 Approaching vehicle icon (Front Cross Traffic Information)*
4 Approaching vehicle icon (Rear Cross Traffic Alert (RCTA))

*: If equipped

The top view displays an image of the vehicle’s surroundings from above the vehicle. This view is useful for checking the vehicle’s surroundings when you are driving.

▼ Front view

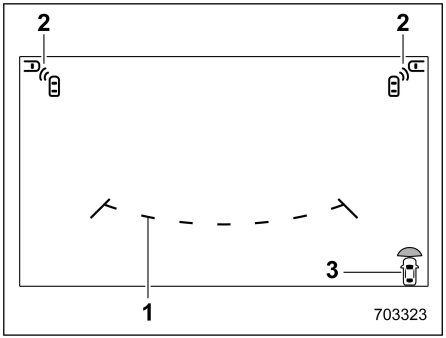

1 Guiding lines
2 Approaching vehicle icon (Front Cross Traffic Information)*
3 Camera status indicator
*: If equipped

The guiding lines that indicate the width and the front end of your vehicle are displayed on the monitor.

▼ Side view

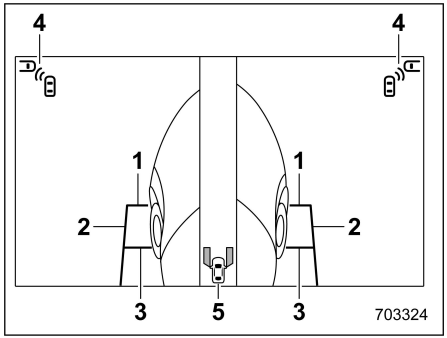

1 Front-of-vehicle guiding line
2 Side-of-vehicle guiding line
3 Center-of-front-tire guiding line
4 Approaching vehicle icon (Front Cross Traffic Information)*
5 Camera status indicator
*: If equipped

The guiding lines that indicate the width and the front end of the vehicle are displayed on the monitor.

▼ Rear view

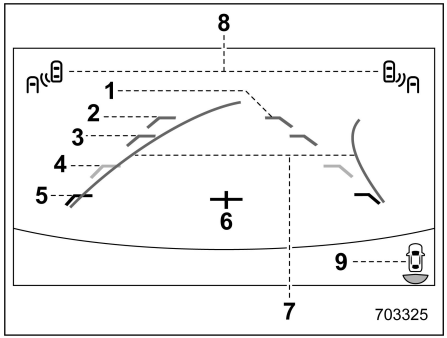

1 Vehicle width line (oblique vertical line)
2 Approx. 3 m (10 ft) from the bumper (green horizontal line)
3 Approx. 2 m (6 ft) from the bumper (green horizontal line)
4 Approx. 1 m (3 ft) from the bumper (yellow horizontal line)
5 Approx. 0.5 m (1.5 ft) from the bumper (red horizontal line)
6 Vehicle centerline
7 Dynamic guidelines
8 Approaching vehicle icon (Rear Cross Traffic Alert (RCTA))
9 Camera status indicator

The help lines are a guide to help you judge distances based on the screen image.

– CONTINUED –

Range of Multi View Monitor

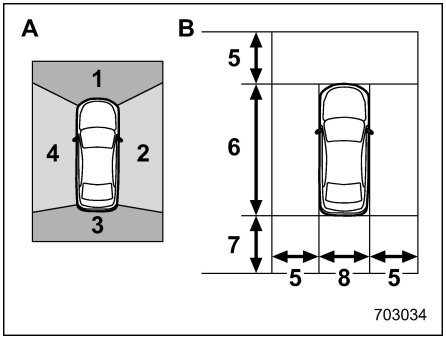

A Camera to be used
B Range of displayed image
1 Front camera
2 Side camera (right-hand side)
3 Rear camera
4 Side camera (left-hand side)
5 Approx. 2 m (6 ft) from the vehicle
6 Vehicle overall length
7 Approx. 2.5 m (8 ft) from the vehicle
8 Vehicle overall width

WARNING

The range that can be viewed with the camera is limited. Always make sure that you check your surroundings directly when the vehicle is in motion and proceed slowly. If you do not, it may cause an accident or injury.

NOTE

- **The range of the displayed image may differ depending on the status of your vehicle or of the road surface.**
- **Because the Multi View Monitor system uses a specially designed lens, the sense of distance in the displayed image is different from the actual distance.**

Using the Camera

CAUTION

Obey the following instructions to prevent a system malfunction.

- **Do not apply any strong impact to the camera such as by hitting it with an object. Striking the camera can change the mounting angle.**
- **The camera unit is a waterproof structure. Do not attempt to remove, disassemble or modify the unit.**
- **Do not vigorously rub the camera lens or polish it using a hard brush or abrasive compounds. The lens may be scratched, which can affect the camera image.**
- **The camera lens is made of glass or plastic. Do not allow any organic solvent, body wax, oil film remover or glass coating agent to become attached on the lens surface. If any becomes attached, remove it immediately.**
- **Do not expose the camera lens to any sudden temperature change such as spraying hot water on it in cold weather.**
- **Do not apply the water jet of a high pressure washer to the camera or the surrounding area when cleaning the vehicle. The force of the water pressure can dislodge the camera. Also, water may enter inside the camera and cause a malfunction.**
- **If the camera is exposed to any impact, it can lead to a malfunction. Have the camera inspected by your SUBARU dealer as soon as possible.**
- **Do not use a steam cleaner under any circumstances. Some types of steam cleaners inject hot**

steam.

- **The camera surface may be damaged by a flying stone.**

NOTE

If the camera lens is covered in dirt, the system will not be able to produce a sharp image. If there is foreign material on the camera, such as water drops, snow or mud, clean it with water and wipe away any moisture with a soft cloth. If the camera is heavily soiled, wash it using a neutral detergent.

■ Front Cross Traffic Information (If Equipped)

While the Multi View Monitor is being displayed, the presence of vehicles approaching from the left and right is indicated by icons. If the select lever is set to the “D” position or the “M” position and the system detects an approaching vehicle while the vehicle is stopped, the icon will illuminate.

If the system detects an approaching vehicle while the vehicle is traveling at a speed of approximately 20 km/h (13 mph) or less, the icon will flash and alert the driver using a warning message, an alarm sound, and the EyeSight Assist Monitor display.

For details about the EyeSight Assist Monitor, refer to the Owner’s Manual supplement for the EyeSight system.

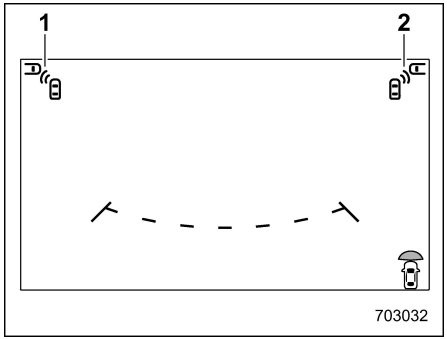

e.g., when the front view screen is displayed

1 When there is a vehicle approaching from the left

2 When there is a vehicle approaching from the right

WARNING

- **The driver is responsible for driving safely. Before you start driving, check the vehicle surroundings with the brake depressed.**
- **Depending on the vehicle condition or the surrounding environment, the radar sensors ability to detect objects may become unstable.**
- **The system is not activated when the speed of an approaching vehicle is less than 5 km/h (3 mph) or more than 60 km/h (37 mph).**

▼ To turn On/Off the Front Cross Traffic Information

To turn the Front Cross Traffic Information on and off, operating “Pre-Collision Braking” in the center information display. Refer to “Car settings” ☞P229.

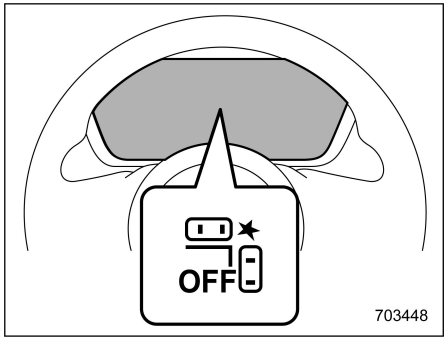

When the Front Cross Traffic Information function is turned OFF, the Front Cross Traffic Braking OFF indicator on the

– CONTINUED –

combination meter will illuminate.

▼ **Handling of front radar sensors**

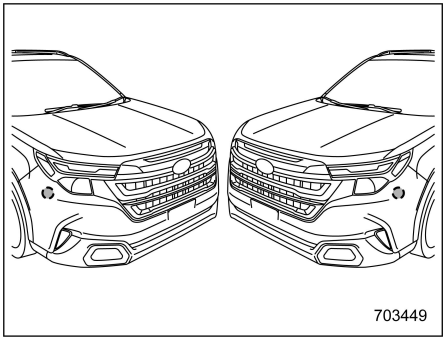

Front radar sensors

There are two radar sensors mounted inside the front bumper, one on each side of the vehicle.

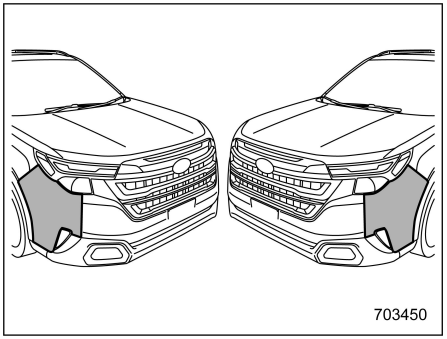

Areas of the vehicle that cannot be repaired

⚠ CAUTION

To ensure correct operation of the Front Cross Traffic Information, obey the following precautions.

- **Always keep the bumper surface near the radar sensors clean.**
- **Do not affix any stickers or other items on the bumper surface near the radar sensors. We recommend that you consult your SUBARU dealer for details.**
- **Do not modify the bumper near the radar sensors.**
- **Do not paint the bumper near the radar sensors.**
- **Do not expose the bumper near the radar sensors to strong impacts. If a sensor becomes misaligned, a system malfunction may occur that affects the functions that detect vehicles in the detection areas. If any strong impact is applied to the bumper, we recommend that you contact your SUBARU dealer for an inspection.**
- **Do not disassemble the radar sensors.**

NOTE

If the radar sensors require repair or replacement, or the bumper area around the radar sensors requires repair, paintwork or replacement, we recommend that you contact your SUBARU dealer for assistance.

■ Rear Cross Traffic Alert (RCTA)

When the rear view is displayed, the icon flashes when the Rear Cross Traffic Alert (RCTA) detects a vehicle approaching on the left or right from behind the vehicle. For details about Rear Cross Traffic Alert (RCTA), refer to “Rear Cross Traffic Alert (RCTA)” ☞P368.

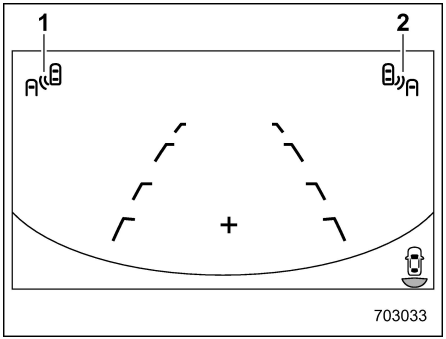

e.g., when the rear view screen is displayed

1 When there is a vehicle approaching from the left

2 When there is a vehicle approaching from the right

7-16. Rear View Camera (Models without Multi View Monitor)

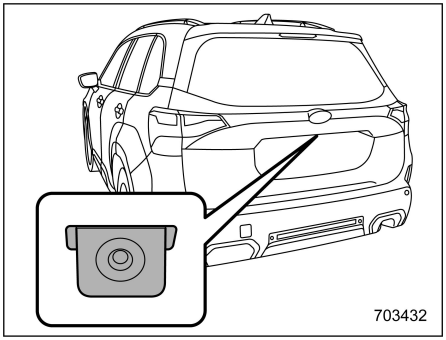

Rear View Camera

A rear view camera is attached to the rear gate. When the ignition switch is in the “ON” position and the select lever is set to “R”, the rear view camera automatically displays the rear view image behind the vehicle on the center information display.

⚠ WARNING

- **Since the rear view camera uses a wide-angle lens, the image on the monitor is different from the actual view in terms of distance.**
- **Since the range of the image on the monitor is limited, always check the rear view and the surrounding area with your eyes and mirrors, and move backward at a slow speed. Moving backward only by checking the rear view image from the camera could cause an accident.**
- **Do not disassemble or modify the camera, switch or wiring. If smoke comes out or you smell a strange odor, stop using the rear view camera immediately. We recommend that you contact your SUBARU dealer for an inspection. Continued use may result in accident, fire or electric shock.**

⚠ CAUTION

- **When washing your vehicle with a high-pressure washer, do not allow water to touch the camera directly. Entry of water in the camera lens may result in condensation, malfunction, fire or electric shock.**
- **Since the camera is a precision device, do not subject it to strong**

– CONTINUED –

impacts. Otherwise, malfunction, fire or electric shock may occur.

- **If mud or snow sticks to or is frozen on the camera, you must be very careful when removing it. Otherwise, damage to the camera may cause a fire or electric shock. Pour water or lukewarm water over the camera to remove mud and ice, and wipe it with a soft, dry cloth.**
- **Do not put a flame close to the camera or wiring. Otherwise, damage or fire may occur.**
- **When replacing the fuse, be sure to use a fuse with the specified rating. Use of a fuse with a different rating may result in a malfunction.**
- **If you use the rear view camera for a long time while the e-BOXER system is not operated, the battery may become completely discharged.**

NOTE

- **Do not wipe the camera with alcohol, benzine or paint thinner. Otherwise, discoloration may occur. To remove contamination, wipe the camera with a cloth moistened with a diluted neutral detergent. Then wipe it with a soft, dry cloth.**
- **When waxing the vehicle, be careful not to apply the wax to the camera. If it comes in contact with the camera, moisten a clean cloth with a diluted neutral detergent to remove the wax.**
- **The camera lens has a hard coating to help prevent scratches. However, when washing the vehicle or cleaning the camera lens, be careful not to scratch the camera lens. Do not use a washing brush directly on the camera lens. The image quality of the rear view camera may deteriorate.**
- **Strong light shined on the camera lens may develop vertical lines around the light source. This is not a malfunction.**
- **Under the fluorescent light, the display may flicker. However, this is not a malfunction.**
- **The image of the rear view camera may be slightly different from the actual color of the objects.**
- **If any of the following malfunctions occur in the rear view camera system, refer to "Malfunctions of the Center Information Display" ☞P452.**
  - **The screen becomes blue or black.**
  - **The screen does not switch to the image of the rear view camera.**
  - **The camera status indicator is not displayed on the screen.**

■ How to Use the Rear View Camera

When you move the select lever to the "R" position, the "R" position indicator will be shown on the combination meter and the image of the rear view camera will be displayed on the center information display. When the lever is set to other positions, the image before setting to "R" is displayed.

1. Set the ignition switch to "ON".
2. Set the select lever to "R".

NOTE

- **The image of the rear view camera is horizontally reversed as is the case with the vehicle inside mirror or the outside mirror.**
- **When "Rear Camera Delay Control" is on, the rear view image will be displayed on the center information display for a certain period of time after the select lever is shifted to a position other than the "P" position from "R". To turn the function on and**

off, refer to "General settings" ☞P225.

- It may be difficult to see the image of the rear view camera in the following cases. This is not a malfunction of the camera.
  - The vehicle is in a dark place (at night, in a tunnel, etc.).
  - The vehicle is in an extremely hot or cold place.
  - An object (such as raindrops, snow, dirt, etc.) that disturbs the view of the rear view camera sticks to the lens of the camera.
  - Strong light is shining directly on the camera lens (occasionally, there are vertical lines on the screen).
- The brightness and contrast of the center information display can be adjusted. Refer to "Illumination Brightness Control" ☞P178 and "Brightness/Contrast" ☞P234.

■ Viewing Range on the Screen

⚠ CAUTION

The range that can be viewed with the rear view camera is limited. Always be sure to check with your eyes when moving backward and proceed slowly. Otherwise, it may cause an accident or injury.

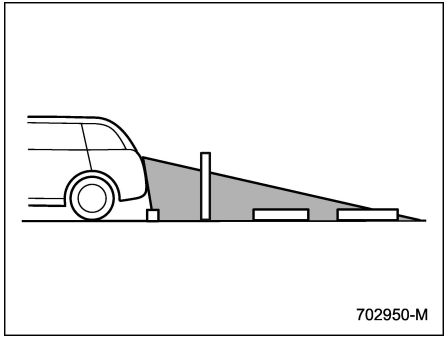

Range of view

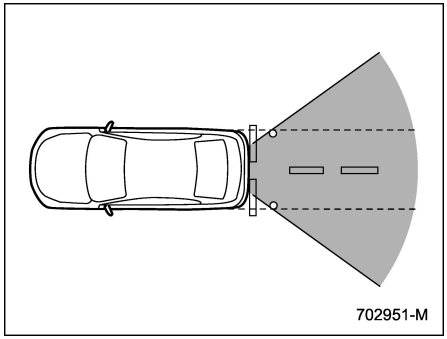

Range of view

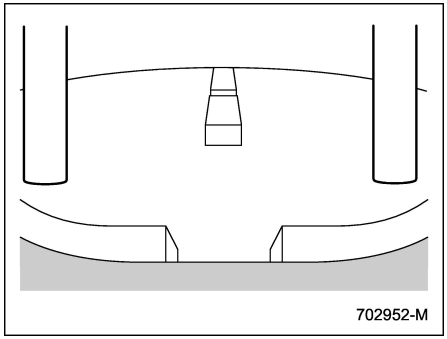

Image from camera

The area from the rear end of the bumper can be viewed. Areas at both ends of the bumper and areas just under the bumper cannot be viewed.

Also, the image from the rear view camera looks shorter than the actual distance.

– CONTINUED –

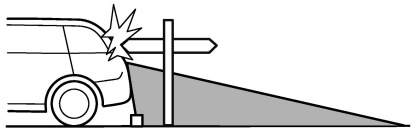

Range of view

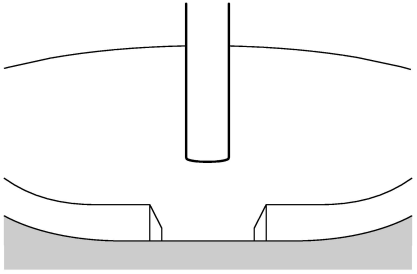

Image from camera

The area above the camera cannot be viewed. If there is an object that has a wide projection on its upper part such as a sign pole behind the vehicle, the projection cannot be seen on the screen.

■ Help Lines

The help lines are a guide to help you realize the actual distance from the screen image.

NOTE

If you shift to the “R” range within several seconds after turning on the ignition switch, the warning message may not be displayed. Wait for several seconds after turning on the ignition switch before shifting to the “R” range. Then, the warning message will be displayed.

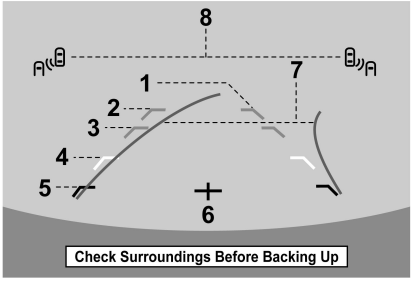

Help lines

1 Vehicle width line (oblique vertical line)
2 Approx. 3 m (10 ft) from the bumper (green horizontal line)
3 Approx. 2 m (6 ft) from the bumper (green horizontal line)
4 Approx. 1 m (3 ft) from the bumper (yellow horizontal line)
5 Approx. 0.5 m (1.5 ft) from the bumper (red horizontal line)
6 Vehicle centerline
7 Dynamic guidelines
8 Approaching vehicle icon (Rear Cross Traffic Alert (RCTA))

When the select lever is set to “R”, the monitor screen displays the help lines together with the rear view image.

⚠ CAUTION

- **When moving backward, always check the back with your eyes without relying on the help lines. Otherwise, it may cause an accident or injury.**
- **The actual position may be different from the indication of the help lines.**
- **Differences may occur due to the number of passengers or the loaded cargo.**
- **When the vehicle is on a slope or inclined against the road, the indication is different from the actual position.**

NOTE

When "Steering Angle Lines" is off, the dynamic guidelines will disappear from the center information display. To turn the dynamic guidelines on and off, refer to "General settings" ☞P225.

▼ Difference between screen image and actual road

The distance markers show the distance for a level road when the vehicle is not loaded. It may be different from the actual distance depending on the loading conditions or road conditions.

▽ When there is an upward slope at the back

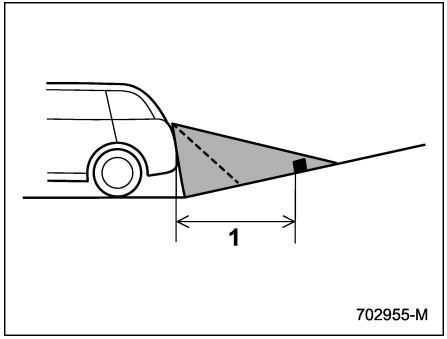

1 1 m (3 ft)

The distance on the screen looks farther than the actual distance.

▽ When there is a downward slope at the back

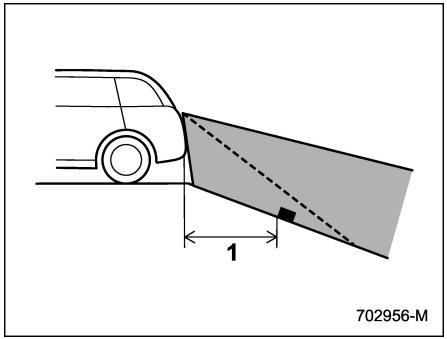

1 1 m (3 ft)

The distance on the screen looks nearer than the actual distance.

NOTE

When cargo is loaded, the rear view distance on the screen looks farther than the actual distance as in an upward slope.

– CONTINUED –

▼ **Feature of distance marker**

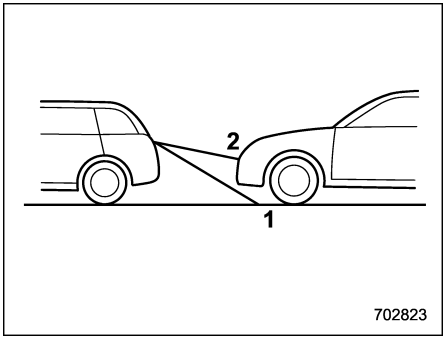

1 1 m (3 ft) line
2 3 m (10 ft) line

The distance marker shows the distance on the road. If there is a car or another object close behind, distance cannot be correctly displayed.

7-17. Subaru Rear Vehicle Detection (SRVD) (If Equipped)

The Subaru Rear Vehicle Detection (SRVD) consists of rear radar sensors with Blind Spot Detection, Lane Change Assist and Rear Cross Traffic Alert.

These functions of SRVD are the systems that detect objects and vehicles to the rear and draw attention to the driver when changing a lane or when driving in reverse.

⚠ WARNING

The driver is responsible for driving safely. Always be sure to check the surroundings with your eyes when changing lanes or reversing the vehicle.

The system is designed to assist the driver in changing lanes or reversing safely by monitoring the rear and side areas of the vehicle. However, you cannot rely on this system alone in assuring the safety during a lane change or reversing. Overconfidence in this system could result in an accident and lead to serious injury or death. Since the system operation has various limitations, the flashing or illumination of the SRVD approach indicator light may be delayed, or the warning buzzer may be delayed or inoperative, even if there is a vehicle traveling in a neighboring lane or approaching your vehicle from either side.

The driver is responsible for paying attention to the rear and side areas of the vehicle.

⚠ CAUTION

In the following cases, turn off the SRVD system. The system may not operate properly due to blocked radar waves.

- **When towing a load**
- **When a bicycle carrier or other item is fitted to the rear of the vehicle**
- **When using a chassis dynamometer or free roller device, etc.**
- **When running the e-BOXER system and making the wheels rotate while lifting up the vehicle**

■ System Features

SRVD consists of the following functions.

- To detect a vehicle in a blind spot on an adjacent lane or a vehicle approaching at high speed while driving the vehicle (Blind Spot Detection and Lane Change Assist)
- To detect a vehicle approaching from the right or left while reversing the vehicle (Rear Cross Traffic Alert)

The system uses rear radar sensors for the following features.

NOTE

The SRVD radar sensor is approved under the radio wave related laws of each country. For details, refer to "Technical Information" ☞P574.

▼ Blind Spot Detection (BSD)

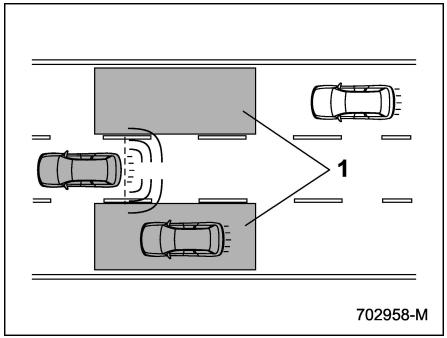

1 Operating range

The system notifies the driver of the presence of vehicles in its blind spot.

- If the system detects a vehicle in its blind spot, it warns the driver by illuminating the SRVD approach indicator light(s) on the outside mirror(s).
- **For Australia models:**
  If the driver operates the turn signal lever in the direction where the SRVD approach indicator light is illuminating, the system warns the driver of dangers by flashing the SRVD approach indicator light and the warning buzzer sounds.
  For other models:
  If the driver operates the turn signal lever in the direction where the SRVD approach indicator light is illuminating, the system warns the driver of dangers by flashing the SRVD approach indicator light.

▼ Lane Change Assist (LCA)

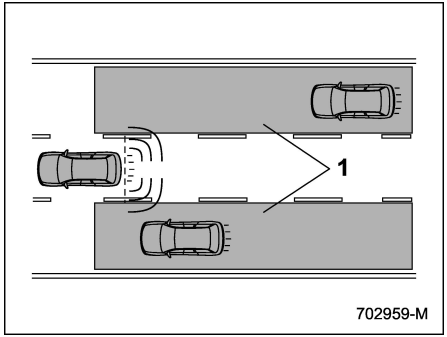

1 Operating range

The system notifies the driver of vehicles approaching at a high speed in the neighboring lanes.

- If the system detects a vehicle approaching at a high speed in the neighboring lanes, it warns the driver of dangers by illuminating the SRVD approach indicator light(s) on the outside mirror(s).
- **For Australia models:**
  If the driver operates the turn signal

– CONTINUED –

lever in the direction where the SRVD approach indicator light is illuminating, the system warns the driver of dangers by flashing the SRVD approach indicator light and the warning buzzer sounds.

For other models:

If the driver operates the turn signal lever in the direction where the SRVD approach indicator light is illuminating, the system warns the driver of dangers by flashing the SRVD approach indicator light.

▼ Rear Cross Traffic Alert (RCTA)

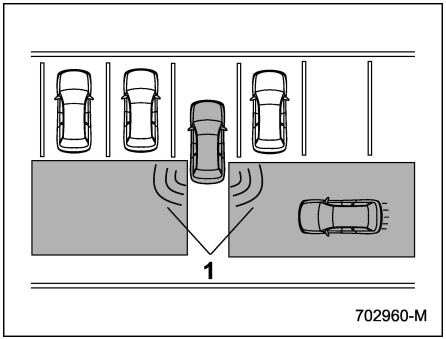

1 Operating range

The system notifies the driver of another vehicle approaching from either side when driving in reverse. This feature helps the driver check the rear and side areas of the vehicle when moving backward.

If the system detects a vehicle approaching from either side while moving backward, it warns the driver of dangers in the following way.

- The SRVD approach indicator light(s) on the outside mirror(s) flashes.
- A warning buzzer sounds.
- An icon appears on the center information display.

▽ Limitations of the detectability of RCTA

Since the detectability of RCTA is limited, the RCTA may not operate properly in angled parking.

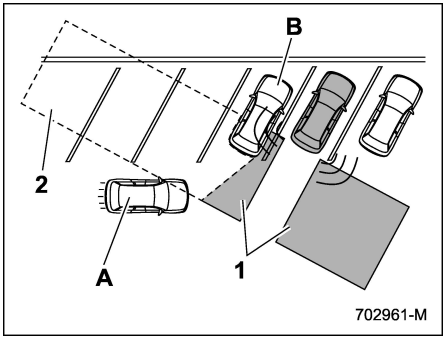

Example 1

1 The detection range of the radar sensors
2 Area out of detection range of the radar sensors
A Vehicle that may not be detected
B Parked vehicle

⚠ WARNING

An approaching vehicle (A) may not be detected because the detection range is limited by the parked vehicle (B). Always be sure to check the surroundings with your eyes when reversing the vehicle.

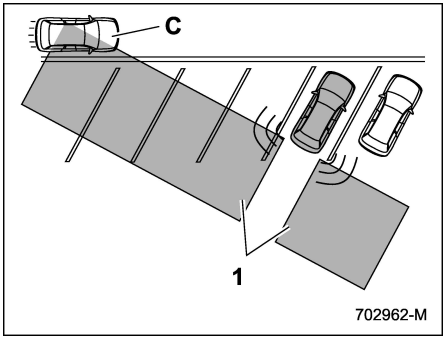

Example 2
1 The detection range of the radar sensors
C Vehicle that may be detected

NOTE

The system may detect that a vehicle (C) is passing in front of your vehicle. Always be sure to check the surroundings with your eyes when reversing the vehicle.

■ System Operation

▼ Operating conditions

The SRVD will operate when all of the following conditions are met.

- The ignition switch is in the “ON” position.
- The SRVD warning indicator and SRVD OFF indicator are turned off.
- The vehicle is driven at speeds above 12 km/h (7 mph) (except when reversing).
- The select lever is in the “R” position (RCTA only).

The SRVD will not operate in the following situations.

- The SRVD OFF indicator appears.
- The vehicle speed is below 10 km/h (6 mph) even when the SRVD OFF indicator does not appear (except when reversing).

NOTE

- **In the following cases, the SRVD will stop operating and the SRVD warning indicator will appear.**
  - **When a malfunction occurs in the system, including the SRVD approach indicator light**
- **If the SRVD warning indicator appears, exercise proper caution. For details, refer to “SRVD Warning Indicator” ☞P374.**
- **In the following cases, the SRVD will temporarily stop operating (or may stop operating) and the SRVD OFF indicator will appear.**
  - **When the radar sensor becomes significantly misaligned (If the orientation of the radar sensor is shifted for any reason, readjustment is required. We recommend that you have the sensor adjusted at a SUBARU dealer.)**
  - **When a large amount of snow or ice sticks to the rear bumper surface around the radar sensors**
  - **When the vehicle is driven on a snow-covered road or in an environment in which there are no objects around (such as in a desert) for a prolonged period of time**
  - **When the temperature around the radar sensors increases excessively due to long driving on uphill grades in the summer, etc.**
  - **When the temperature around the radar sensors becomes extremely low**
  - **When the 12 V battery voltage lowers**
  - **When the vehicle voltage ex-**

– CONTINUED –

ceeds the battery voltage rating

The SRVD will resume operation once these conditions are corrected, and the SRVD OFF indicator will disappear. However, if the SRVD OFF indicator appears for a prolonged period of time, we recommend that you have the system inspected at a SUBARU dealer as soon as possible.

- **The detectability of the radar sensors is restricted. The SRVD detection may be impaired and the system may not operate properly under the following conditions.**
  - **When the rear bumper around the radar sensors is distorted**
  - **When ice, snow or mud adheres to the rear bumper surface around the radar sensors**
  - **When stickers, etc. are affixed on the areas of the radar sensors on the rear bumper**
  - **During adverse weather conditions such as rain, snow or fog**
  - **When driving on wet roads such as snow-covered roads and through puddles**
- **The radar sensors may not detect or may have difficulty detecting the following vehicles and objects.**
  - **Small motorcycles, bicycles, pedestrians, stationary objects on the road or road side, etc.**
  - **Vehicles with body shapes that the radar may not reflect (vehicles with lower body height such as a trailer with no cargo and sports cars)**
  - **Vehicles that are not approaching your vehicle even though they are in the detection area (either on a neighboring lane to the rear or beside your vehicle when reversing) (The system determines the presence of approaching vehicles based on data detected by the radar sensors.)**
  - **Vehicles traveling at significantly different speeds**
  - **Vehicles driving in parallel at almost the same speed as your vehicle for a prolonged time**
  - **Oncoming vehicles**
  - **Vehicles in a lane beyond the neighboring lane**
  - **Vehicles traveling at a significantly lower speed that you are trying to overtake**
- **On a road with extremely narrow lanes, the system may detect vehicles driving in a lane next to the neighboring lane.**

■ SRVD Approach Indicator Light/Warning Buzzer

While the SRVD is active, the following item(s) will operate to alert the driver:

- For Australia models:
  The SRVD approach indicator light flashes and the warning buzzer sounds.
- For other models:
  - If the BSD/LCA detects a vehicle in its blind spot, the SRVD approach indicator light illuminates.
  - If the RCTA detects a vehicle approaching from either side while moving backward, the SRVD approach indicator light flashes and the warning buzzer sounds.

▼ SRVD approach indicator light

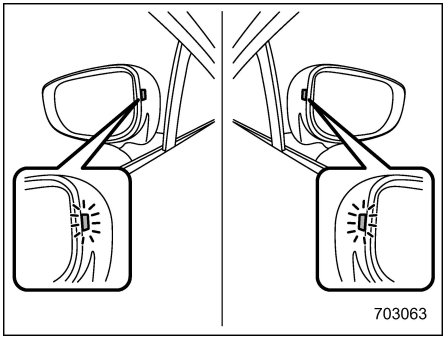

SRVD approach indicator light

The indicator light will illuminate when a vehicle approaching from behind is detected.

The indicator light will flash to warn the driver of dangers under the following conditions.

- While the indicator light is illuminating, if the turn signal lever is operated toward the side in which this light turned on
- When reversing the vehicle while the system detects a vehicle approaching from either side

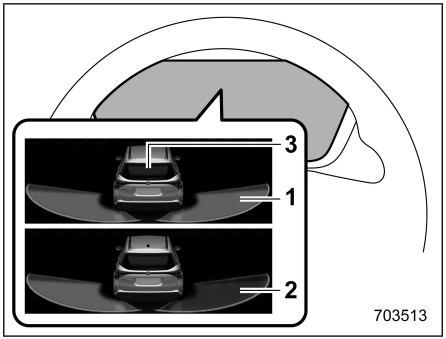

Vehicle detected in adjacent lane indicator*1

1 When a vehicle is detected (white area with yellow outline is indicated)
2 When the turn signal lever is being operated while a vehicle is detected (yellow area is indicated)
3 Your vehicle indicator*2

When your vehicle indicator*2 is displayed, the combination meter also shows the vehicle detection status of the adjacent lane.

*1: Models with 12.3-inch meter display

*2: For details regarding your vehicle indicator, refer to the Owner's Manual supplement for the EyeSight system.

NOTE

- **When your vehicle indicator is turned off or your vehicle is reversing, the meter display will not display the vehicle detected in adjacent lane indicator.**
- **When the EyeSight system is malfunctioning or is not functioning temporarily, the vehicle detected in adjacent lane indicator is displayed even if your vehicle indicator is not shown.**

▽ SRVD approach indicator light dimming function

When the headlights are turned on, the brightness of the SRVD approach indicator light will be reduced.

NOTE

- **You may have difficulty seeing the SRVD approach indicator light under the following conditions.**
  - **When sunlight shines directly on it**

– CONTINUED –

- **When the headlight beams from a vehicle traveling behind shines directly on it**

- **While the illumination brightness control dial is in the fully upward position, even if the headlights are turned on, the brightness of the SRVD approach indicator light will not be reduced. For details about the illumination brightness control dial, refer to "Illumination Brightness Control" ☞P178.**

▼ SRVD approach warning buzzer

A warning buzzer sounds to warn the driver of dangers under the following conditions.

- While the indicator light is illuminating, if the turn signal lever is operated toward the side in which this light turned on (Australia models)
- When reversing the vehicle while the system detects a vehicle approaching from either side

The setting of the warning buzzer volume can be changed by operating the center information display. For details, refer to "Car settings" ☞P229.

▼ Safety tips regarding the SRVD approach indicator light/warning buzzer

- In the following cases, operation of the SRVD approach indicator light and the warning buzzer may be delayed or the system may fail to issue these warnings.
  - When a vehicle moves to the neighboring lane from a lane next to the neighboring lane
  - When driving on a steep incline or on repeated sharp uphill and downhill grades
  - When going beyond a pass
  - When both your vehicle and a vehicle driving on a neighboring lane are driving on the far side of each lane.
  - When several narrowly-spaced vehicles are approaching in a row
  - In low radius bends (tight bends or when making turns at an intersection)
  - When there is a difference in height between your lane and the neighboring lane
  - Immediately after the SRVD is activated by touching "Rear Vehicle Detection (SRVD)"
  - Immediately after the select lever is shifted to the "R" position
  - When extremely heavy cargo is loaded in the cargo area
- During reversing, operation of the SRVD approach indicator light and the warning buzzer may be delayed or the system may fail to issue these warnings under the following conditions.
  - When backing out of an angled parking space
  - When a large-sized vehicle is parked next to your vehicle (That vehicle prevents the propagation of radar waves.)
  - When reversing on sloped roads
  - When reversing at a high speed

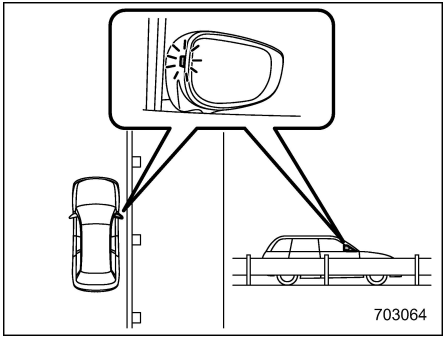

- The SRVD approach indicator light may illuminate when driving close to solid objects on the road or road side (such

as guardrails, tunnels and sidewalls).

- When turning at an intersection in urban areas, or a multilane intersection, the SRVD approach indicator light may flash.
- If a building or a wall exists in the reversing direction, the SRVD approach indicator light may flash and the warning buzzer may sound.
- In the following cases, the system may detect a vehicle driving two lanes away from your vehicle.
  - When your vehicle drives on the near side of its lane from the corresponding vehicle
  - When the vehicle driving two lanes away drives on the near side of its lane from your vehicle

■ SRVD OFF Indicator

▼ System temporary stops

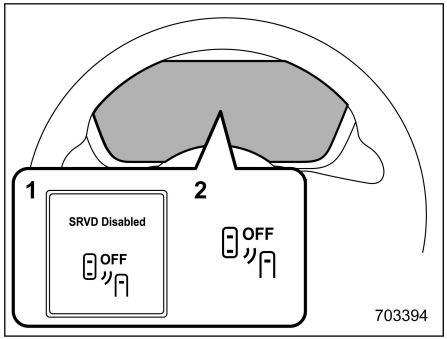

1 SRVD temporary stop message
2 SRVD OFF indicator

This display appears when the system is used at extremely high or low temperatures or when abnormal voltage exists. Once these conditions are corrected, the system will recover from the temporary stop condition and the indicator will disappear.

If the indicator remains displayed for a prolonged time, we recommend that you have the system inspected at a SUBARU dealer.

▼ System temporary stops due to reduced radar sensitivity

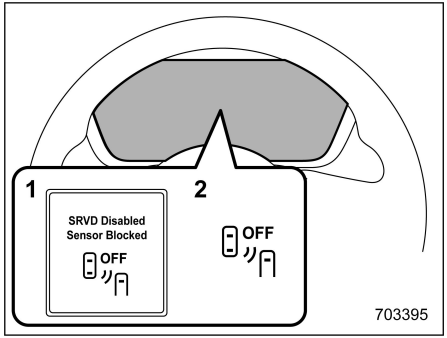

1 SRVD temporary stop message due to reduced radar sensitivity
2 SRVD OFF indicator

This display appears when the detectability of the radar sensors is reduced. Once the condition is corrected, the system will recover from the temporary stop condition and the indicator will disappear.

If the indicator remains displayed for a prolonged time, we recommend that you have the system inspected at a SUBARU dealer.

– CONTINUED –

■ SRVD Warning Indicator

▼ System malfunction

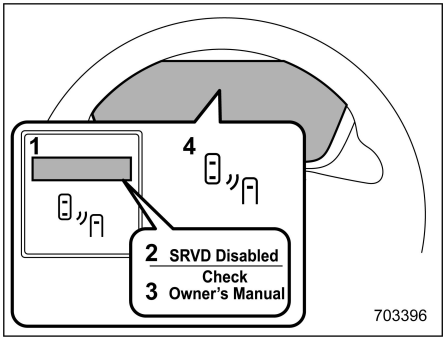

1 SRVD malfunction message
2 At first, this message will appear
3 Then this message will appear
4 SRVD warning indicator

This display appears when a malfunction occurs in the system. We recommend that you contact a SUBARU dealer and have the system inspected.

■ To Turn On/Off the SRVD

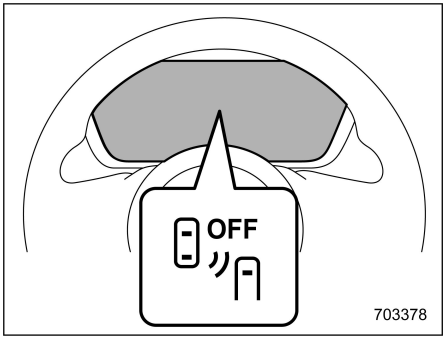

SRVD OFF indicator

To turn the SRVD system on and off, operate the center information display. Refer to "Car settings" ☞P229.

When the SRVD system is turned OFF, the SRVD OFF indicator on the combination meter will illuminate.

NOTE

- **For Australia models:**
  When you turn the ignition switch off, the SRVD ON/OFF settings will always reset, and the system will not store the settings of the function. Therefore, every time you turn the ignition switch to the "ON" position, the SRVD will turn on automatically.

  For other models:
  As soon as you turn off the ignition switch, the SRVD ON/OFF setting is stored in the system. Therefore, when you turn the ignition switch from the "OFF" state to the "ON" position, the SRVD setting will revert to the state that was set before the ignition switch was turned off.

- **When you turn off SRVD, some EyeSight functions will be deactivated. For details, refer to the EyeSight Owner's Manual Supplement.**

■ Handling of Rear Radar Sensors

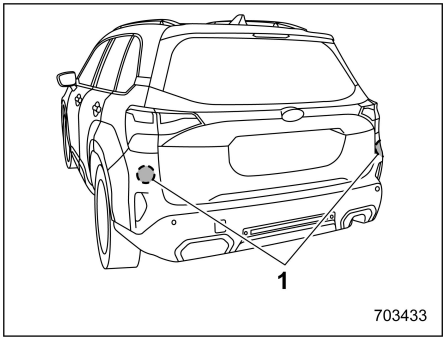

1 Rear radar sensors

The radar sensors, one on each side of the vehicle, are mounted inside the rear bumper.

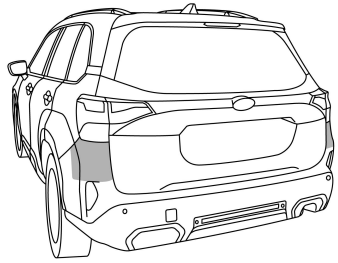

Areas of the vehicle that cannot be repaired

CAUTION

To ensure correct operation of the SRVD, observe the following precautions.

- **Always keep the bumper surface near the radar sensors clean.**
- **Do not affix any stickers or other items on the bumper surface near the radar sensors. For details, we recommend that you consult your SUBARU dealer.**
- **Do not modify the bumper near the radar sensors.**
- **Do not paint the bumper near the radar sensors.**
- **Do not expose the bumper near the radar sensors to strong impacts. If a sensor becomes misaligned, a system malfunction may occur, including the inability to detect vehicles entering the detection areas. If any strong shock is applied to the bumper, we recommend that you contact your SUBARU dealer for inspection.**
- **Do not disassemble the radar sensors.**

NOTE

If the radar sensors require repair or replacement, or the bumper area around the radar sensors requires repair, paintwork or replacement, we recommend that you contact your SUBARU dealer for assistance.

7-18. Reverse Automatic Braking (RAB) System (If Equipped)

Reverse Automatic Braking (RAB) is a system designed to help avoid collisions or reduce collision damage when reversing the vehicle. If a wall or an obstacle is detected in the reversing direction, the system will notify the driver with a warning sound and may activate the vehicle's brakes automatically.

WARNING

- **Reverse Automatic Braking (RAB) is not a system intended to replace the driver's responsibility to check their surroundings for vehicles or obstacles to avoid a collision.**
- **The driver is responsible for driving safely. Before reversing, be sure to first depress the brake pedal and visually check the surroundings.**
- **There are some cases in which the vehicle cannot avoid collision, because the system operation has limitations. The warning sound or automatic braking may**

– CONTINUED –

be delayed or may not operate at all even when an obstacle is present.

- Make sure to set the Automatic Braking function to OFF when the vehicle is on the free roller or on the chassis dynamometer. Otherwise, the vehicle may move and it may cause an accident.
- Make sure to set the Automatic Braking function to OFF when towing a trailer. Otherwise, the vehicle may move and it may cause an accident.
- The system is not designed to detect people (including children), animals or other moving objects.
- Depending on the vehicle condition or the surrounding environment, the sonar sensor's ability to detect objects may become unstable.
- When an attachment part (trailer hitch, bicycle carrier, bumper guard) is installed on the rear of the vehicle, turn off the Reverse Automatic Braking (RAB). If this function is on when an attachment or a similar part is installed, it may result in a system malfunction that causes an accident resulting in serious damage, injury or death.

NOTE

The Reverse Automatic Braking (RAB) system records and stores the following data when automatic braking operates. It does not record conversations, personal information or other audio data.

- Distance from the object
- Vehicle speed
- Accelerator pedal operation status
- Brake pedal operation status
- Select lever position
- Outside temperature
- The sensitivity setting of the sonar sensors

SUBARU and third parties contracted by SUBARU may acquire and use the recorded data for the purpose of vehicle research and development. SUBARU and third parties contracted by SUBARU will not disclose or provide the acquired data to any other third party except under the following conditions.

- The vehicle owner has given his/her consent.
- The disclosure/provision is based on a court order or other legally enforceable request.
- Data that has been modified so that the user and vehicle cannot be identified is provided to a research institution for statistical processing or similar purposes.

■ Reverse Automatic Braking (RAB) System Overview

The Reverse Automatic Braking (RAB) system will operate the following 2 functions using 4 sonar sensors.

- **Sonar Audible Alarm function**

The Reverse Automatic Braking (RAB) system detects objects rearward and warns the driver by warning message on the center information display and warning beeps.

- **Automatic Braking function**

The Automatic Braking function detects objects rearward and if there is a high risk of a collision, the system decelerates the vehicle and controls the braking to reduce damage.

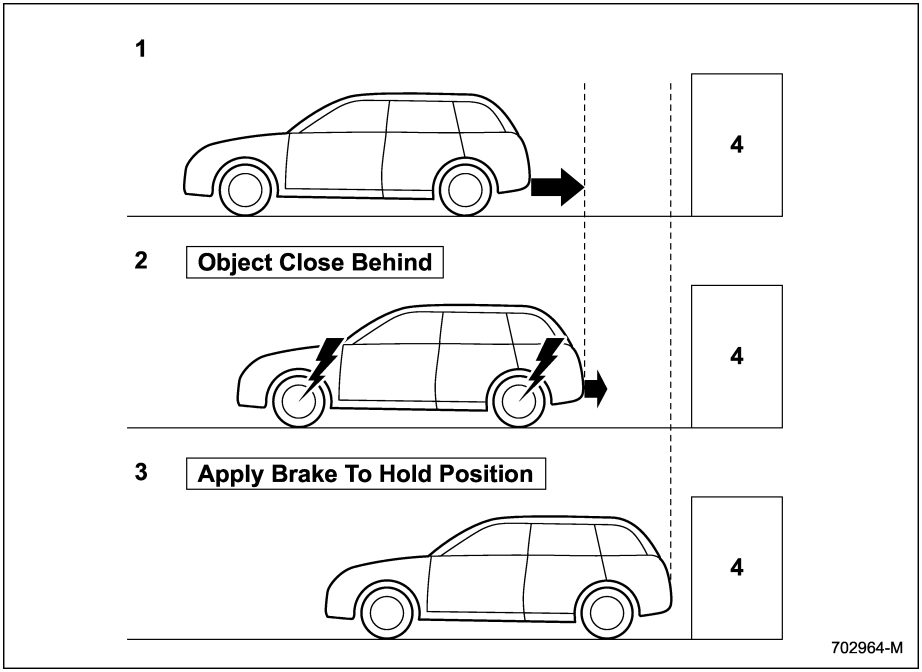

1 When reversing
2 When either strong automatic braking or torque control is applied to prevent collision (in this case, short warning beeps or continuous warning beeps will sound)
3 When the vehicle is stopped by the system (in this case, the continuous beep will remain sounding)
4 Object (e.g., a wall)

▼ Detecting range

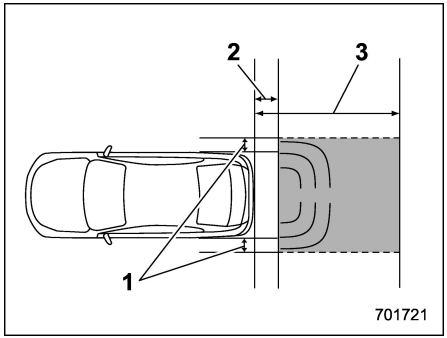

1 Detecting range (width): Approximately 15 cm (6 in) outside of the vehicle width
2 Range that the system cannot detect: Approximately 50 cm (20 in) behind the rear of the vehicle
3 Detecting range (length): Approximately 1.5 m (5 ft) from the rear of the vehicle

⚠ WARNING

If your vehicle is trapped on a railroad crossing and you are trying to escape by reversing through the crossing gate, the system may recognize the crossing gate as an obstacle and brake may activate. In this case, remain calm and either continue to depress the accelerator pedal or cancel the system. To

– CONTINUED –

cancel the system, refer to "Cancelling the Reverse Automatic Braking (RAB) System Operation" ☞P385.

■ Operating Conditions

The Reverse Automatic Braking (RAB) system will operate when all of the following conditions are met.

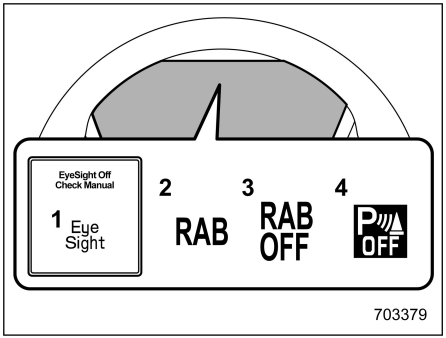

1 EyeSight warning indicator
2 RAB warning indicator
3 RAB OFF indicator
4 Sonar Audible Alarm OFF indicator

- The ignition switch is in the "ON" position.
- The EyeSight warning indicator is off.
- The RAB warning indicator is off.
- The RAB OFF indicator is off.
- The select lever is in the "R" position.
- Sonar Audible Alarm OFF indicator is off.

Sonar Audible Alarm function

- The Sonar Audible Alarm function is set to "ON".
- The vehicle speed is from 0 to 15 km/h (0 to 9 mph).

Automatic Braking function

- The Automatic Braking function is set to "ON".
- The vehicle speed is from 1.5 to 15 km/h (1 to 9 mph).

NOTE

- **In the following cases, the Reverse Automatic braking (RAB) system will not operate. We recommend that you promptly contact a SUBARU dealer to have the system inspected.**
  - **The EyeSight warning indicator is illuminated.**
  - **The RAB warning indicator is illuminated.**
- **In the following cases, the Reverse Automatic braking (RAB) system cannot be operated.**
  - **The (EyeSight Temporary Stop indicator: White) is illuminated, and the messages corresponding to the EyeSight temporary stop are displayed on the combination meter. For details, refer to the Owner's Manual supplement for the EyeSight system.**
  - **The RAB OFF indicator is illuminated.**
- **In the following cases, the functions may not be able to properly work. We recommend that you promptly contact a SUBARU dealer to have the system inspected.**
  - **A sticker, paint, or a chemical is applied to the sonar sensors or the rear bumper.**
  - **The rear bumper is modified.**
  - **The rear bumper has been removed and attached.**
  - **The ground clearance is changed due to the vehicle's loading condition or modification.**
  - **There is damage to the sonar sensors or the rear bumper.**
  - **The rear bumper is exposed to strong impact, or the rear bumper is deformed.**
- **On a steep hill, the system's automatic braking ability will be reduced.**
- **The system is designed to avoid collisions by automatic hard braking when the vehicle's reversing speed is less than approximately 5 km/h (3**

mph). However, the system does not guarantee that the vehicle will be able to avoid collisions in any situation.

- If the vehicle is reversed at an extremely slow speed, the driver's operation may be prioritized. In this case, automatic braking will not operate.
- In the following situations, the system may not be able to detect an object correctly:
  - When the vehicle is approaching diagonally to an object
  - When the steering wheel is turned greatly
- The system may not be able to detect and apply the brake with the following objects.
  - Sharp or thin objects such as poles, fences and ropes which may not reflect the sound wave emitted from the sonar sensor.
  - Objects that are too close to the rear bumper when the select lever is set to the "R" position.
  - Objects with a surface which may not reflect the sound wave emitted from the sonar sensor such as a chain link fence.
- Objects the system is not designed to detect and apply brake.
  - Pedestrians.
  - Moving objects including moving vehicles.
  - Objects which absorbs sound waves such as cloth or snow.
  - Objects whose surface has a diagonal angle.
  - Objects that are low to the ground such as parking blocks.
  - Objects that are high above the ground such as objects hanging from above.
  - Objects that are out of range of the center of the vehicle in the horizontal direction.
  - Objects that are not perpendicular to the ground.
  - The surface of the object is uneven or wavy.
- When reversing the vehicle, the functions may not be able to work properly or may cause a system malfunction if the following conditions exist.

  High frequency sound from other sources are nearby:
  - Horn sound from another vehicle.
  - Engine sound from other vehicles.
  - Sound of an air brake.
  - Vehicle detection equipment or a sonar from another vehicle.
  - A sound wave with a frequency similar to the vehicle's system is transmitted near by.
  - A vehicle equipped with the same system is reversing toward your reversing direction.

  Weather conditions:
  - Extremely high or extremely low temperatures in which the area near the sonar sensor becomes too hot or too cold to operate.
  - The sonar sensors or the rear bumper near the sonar sensors are exposed to heavy rain or a significant amount of water.
  - Fog, snow or sandstorm, etc.
  - Air is moving rapidly such as when a strong wind is blowing.

  Parts attached to the rear bumper near the sonar sensor:
  - Commercial electronic parts (fog light, fender pole, radio antenna) are attached.
  - Parts that emit high frequency sound, such as a horn or speaker, are attached.

– CONTINUED –

Vehicle conditions:

- **Ice, snow or mud is adhered to the sonar sensors or the rear bumper near the sonar sensor.**
- **The vehicle is significantly inclined.**
- **The ground clearance is significantly reduced due to the vehicle's loading condition, etc.**
- **When the sonar sensor is misaligned due to a collision or an accident.**

Surrounding environment:

- **A cloth banner, flag, hanging branch or railroad crossing bars are present in the reversing direction.**
- **When reversing on a gravel or grassy area.**
- **When reversing in an area where objects or walls are adjacent to the vehicle such as narrow tunnels, narrow bridges, narrow roads or narrow garages.**
- **Wheel track or hole is present in the ground of the reversing direction.**
- **When reversing over a drainage cover (grating cover).**

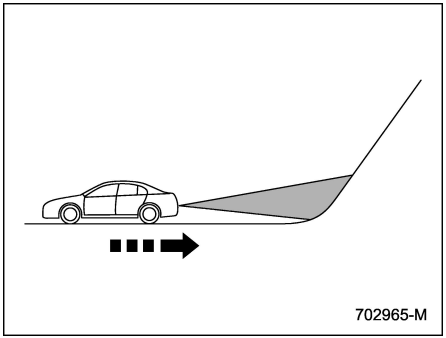

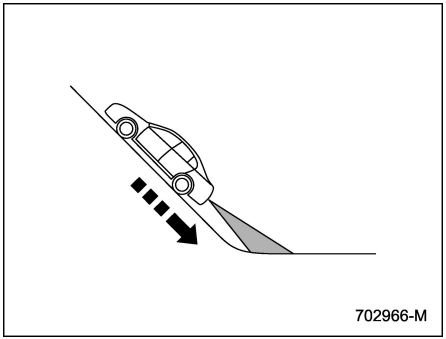

- **The path of the reversing direction is inclined such as on a steep uphill.**
- **When reversing downhill.**

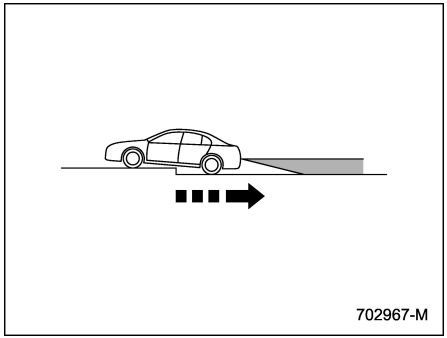

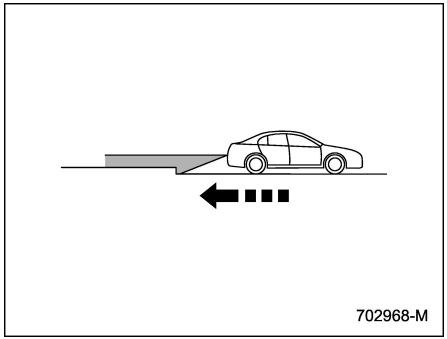

- **A curb or step is present in the reversing direction.**
- **Reversing in a garage with a low ceiling or a tunnel.**
- **There is a patch of snow rearward.**

- **There is a puddle of water.**
- **There is an obstacle that is next to an object.**
- **Going back along a wall.**
- **The area where the road starts touching dirt and snow**
- **When reversing on an uneven road.**

- **In circumstances such as the following, it may not be possible to avoid a collision even when the system operates normally.**
  - **The roads are slippery.**
  - **The tire air pressure is not correct.**
  - **The tires have become worn.**
  - **Tire chains are installed.**
  - **Tires which are not the designated size are installed.**
  - **Emergency repairs were performed using a puncture repair kit.**
  - **The suspension was modified.**
  - **Vehicle driving is unstable due to accident or malfunction.**
  - **The brake warning light is illuminated.**

■ Sonar Audible Alarm Function

When the Reverse Automatic Braking (RAB) system is in operation, audible warning beeps will sound to warn the driver of a potential collision in 3 levels: medium proximity, short proximity, closest proximity.

NOTE

It may take time to display the wall and sound warning beeps after the object was recognized by the Sonar Audible Alarm function.

– CONTINUED –

Guideline of detecting range

Alert level	Range of detected object*	Distance indicator	Alarm pattern
Long proximity alert (object detected)	110 to 150 cm (43 to 59 in)	Green	No warning sound
Medium proximity alert (approaching the object)	70 to 110 cm (28 to 43 in)	Yellow	Short beeps
Short proximity alert (approaching closer to the object)	50 to 70 cm (20 to 28 in)	Orange	Rapid short beeps
Closest proximity alert (too close to the object)	50 cm (20 in)	Red	Continuous beep

*: Range of detection may vary depending on the environmental condition.

▼ Obstacle detected and alert level

When an object is detected in the reversing direction, the range of detected object will be shown on the center information display and combination meter display.

A warning alarm will sound and, depending on the speed, either torque control to generate engine braking or automatic braking will be applied.

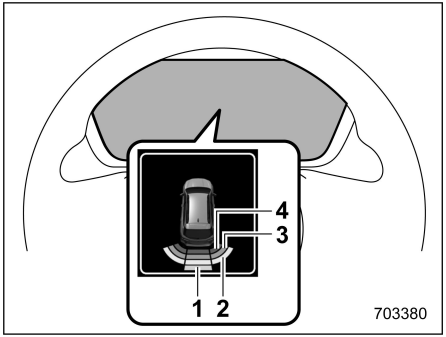

Combination meter display

1 Long proximity alert (green)
2 Medium proximity alert (yellow)
3 Short proximity alert (orange)
4 Closest proximity alert (red)

The alert levels are indicated on the center information display as shown in the following.

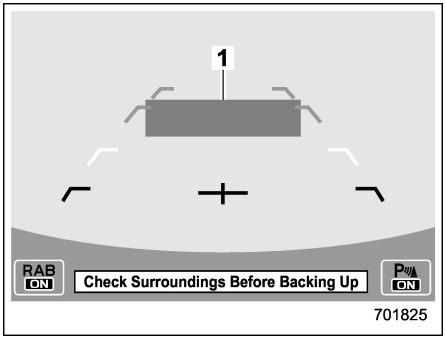

Long proximity alert (object detected)
1 Green: 110 to 150 cm (43 to 59 in)

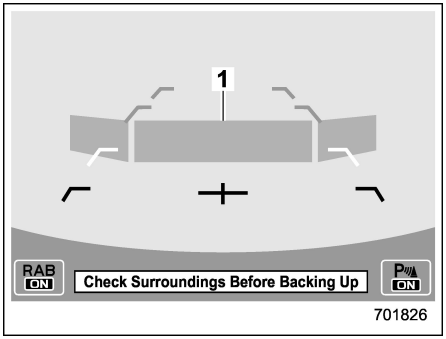

Medium proximity alert (approaching the object)
1 Yellow: 70 to 110 cm (28 to 43 in)

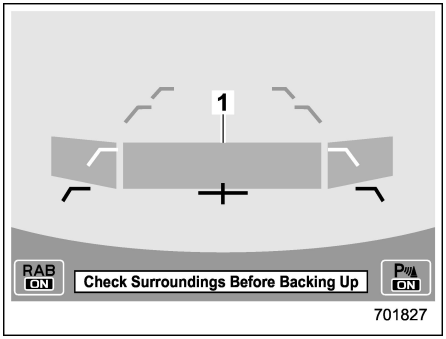

Short proximity alert (approaching closer to the object)
1 Orange: 50 to 70 cm (20 to 28 in)

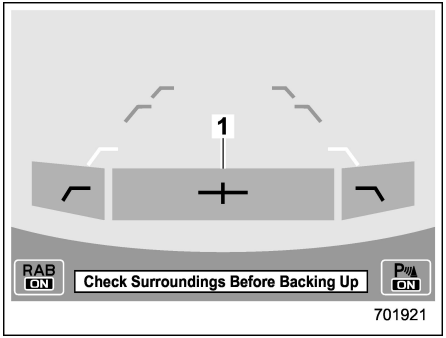

Closest proximity alert (too close to the object)
1 Red: 50 cm (20 in)

■ Automatic Braking Function Operation

▼ Object close behind warning

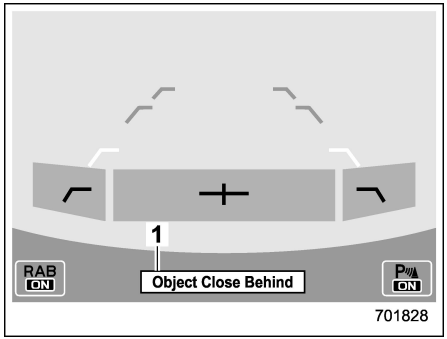

Automatic braking warning
1 Warning message

If the system determine the risk of collision with the object. Short warning beeps or continuous warning beeps will sound and either strong automatic braking or torque control will be applied to prevent collision. At this time, a warning message is also displayed on the combination meter display.

– CONTINUED –

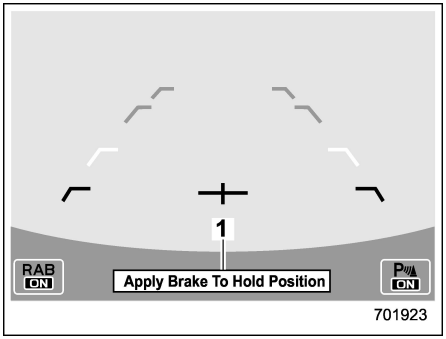

Depress brake pedal warning
1 Warning message

Make sure to depress the brake pedal once the vehicle has been stopped by automatic braking. Until the brake pedal is depressed, a message will be displayed on the center information display and the continuous beep will remain sounding.

At this time, a warning message is also displayed on the combination meter display.

NOTE

The Sonar Audible Alarm function and Automatic Braking function are different in operation conditions. Therefore, there are cases in which only one of these functions will activate.

⚠ WARNING

Depress the brake pedal immediately after the system stops the vehicle by automatic braking. Depending on the conditions of the road surface and tires, the vehicle may not remain stopped, possibly leading to an accident.

▼ After the vehicle is stopped by the system

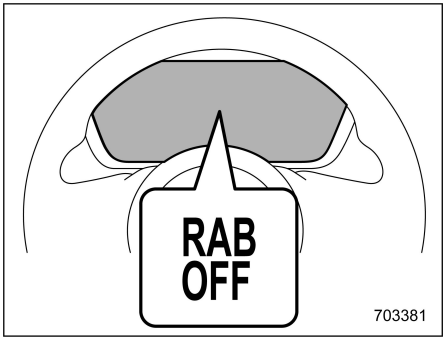

After the brake pedal is depressed, the RAB OFF indicator will illuminate and the system will temporarily stop operating. The RAB OFF indicator will turn off when the select lever is shifted to a position other than the “R” position.

The system will operate again the next time the select lever is shifted to the “R” position.

NOTE

- **In the following cases, after the vehicle has been stopped by the Reverse Automatic Braking (RAB) system, brake control is released and the electronic parking brake operates. For details about releasing the parking brake, refer to “Electronic Parking Brake” ☞P343.**
  - **When 2 minutes pass after the vehicle is stopped**
  - **When any door is opened**
- **The Reverse Automatic Braking (RAB) system may stop operating temporarily in the following cases and the RAB OFF indicator will illuminate.**
  - **Ice, snow or mud is adhered to the sonar sensors or the rear bumper near the sonar sensor.**
  - **Objects are too close to the rear bumper when the select lever is set to the “R” position.**
  - **The system detects sounds of a similar frequency to the RAB sonar.**
  - **The Vehicle Dynamics Control OFF mode is selected.**

■ Canceling the Reverse Automatic Braking (RAB) System Operation

The Reverse Automatic Braking (RAB) system can be temporarily canceled by any of the following operations.

- While the vehicle is stopped by the operation of automatic braking, the brake pedal is depressed.
- While the vehicle is stopped by the operation of automatic braking, the accelerator pedal is depressed.
- The accelerator pedal is depressed continuously (In this case, limited acceleration will be canceled and the vehicle will continue reversing.)
- The select lever is shifted to a position other than the “R” position.

NOTE

The system will be canceled if the object is no longer detected.

■ Reverse Automatic Braking (RAB) System ON/OFF Setting

While the select lever is shifted to the “R” position, the below functions of the Reverse Automatic Braking (RAB) system can be set by operating the center information display.

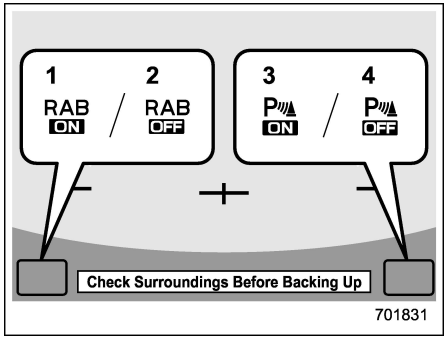

1 ON setting key of Automatic Braking function
2 OFF setting key of Automatic Braking function
3 ON setting key of the Sonar Audible Alarm function
4 OFF setting key of the Sonar Audible Alarm function

When the ON setting key is shown, the corresponding setting is ON.

Touch the ON setting key to turn the setting OFF.

When the OFF setting is shown, the corresponding setting is OFF.

Touch the OFF setting key to turn the setting ON.

When the Automatic Braking function is turned OFF, the following indicator(s) will illuminate.

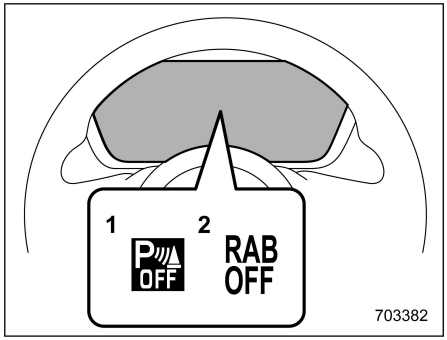

1 Sonar Audible Alarm OFF indicator
2 RAB OFF indicator

The RAB OFF indicator or the Sonar Audible Alarm OFF indicator will turn off when the corresponding function is turned ON.

NOTE

- **When the settings cannot be changed, the ON/OFF setting key will be**

– CONTINUED –

grayed out.

- **The ON/OFF setting key may be grayed out if the Reverse Automatic Braking (RAB) system malfunctions, etc. In this case, turn the ignition switch to the "OFF" position and then turn it to the "ON" position again. If the setting cannot be changed even after turning the ignition switch to the "ON" position again, we recommend that you consult your SUBARU dealer.**
- **As soon as you turn off the ignition switch, the Reverse Automatic Braking (RAB) ON/OFF setting is stored in the system. Therefore, when you turn the ignition switch from the "OFF" state to the "ON" position, the Reverse Automatic Braking (RAB) setting will revert to the state that was set before the ignition switch was turned off.**
- **When you turn the ignition switch off, the Sonar Audible Alarm ON/OFF settings will always reset, and the system will not store the settings of the function. Therefore, every time you turn the ignition switch to the "ON" position, the Sonar Audible Alarm will turn on automatically.**

Also, the following settings can be changed by operating the center information display.

- Warning volume
- Sonar Audible Alarm
- Automatic Braking

For details, refer to "Car settings" ☞P229.

■ RAB Warning Indicator

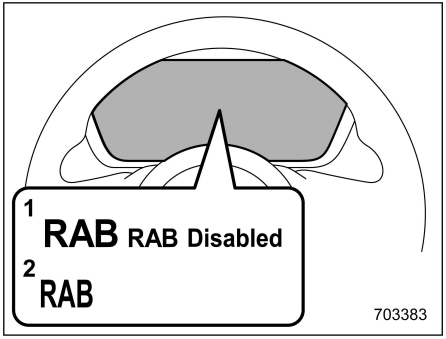

1 RAB malfunction message
2 RAB warning indicator

If the Reverse Automatic Braking (RAB) system malfunctions, the above indicator illuminates on the combination meter. We recommend that you contact the nearest SUBARU dealer for details.

■ Handling of the Sonar Sensors

The 4 sonar sensors are located in the rear bumper. To ensure the proper operation of the Reverse Automatic Braking (RAB) system, observe the following precautions.

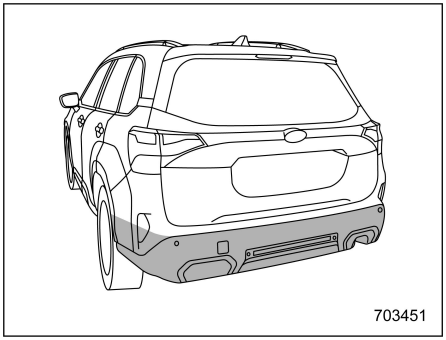

- Do not affix any stickers or other items on the sonar sensor or the rear bumper surface.
- Always keep the sonar sensor and the rear bumper surface clean.
- Do not modify rear bumper.
- Do not paint the rear bumper.
- Do not apply high pressure water to the sonar sensors with a high pressure car-washing machine.

- Do not apply strong impacts to the rear bumper. If a sensor becomes misaligned, a system malfunction may occur, including inability to detect objects in the reversing direction. If any strong impact is applied to the rear bumper, we recommend that you contact a SUBARU dealer to have the system inspected.
- Do not disassemble the sonar sensors.

NOTE

If the sonar sensors require repair or replacement, or if the area of the rear bumper near the sonar sensors requires repair, paintwork or replacement, we recommend that you contact your SUBARU dealer for assistance.

7-19. Driver Monitoring System (If Equipped)

The Driver Monitoring System monitors possible cases when the driver is not paying attention to the forward direction, and also recognizes individual users.

This system warns the driver of inattentive/drowsy driving, and can support safe and comfortable driving by automatically retrieving the following settings.

– Driver position (models with the driver's seat memory)
– Climate control setting
– Meter setting
– Center information display setting
– Car settings

When a user is registered, various settings are automatically retrieved when the user enters the vehicle.

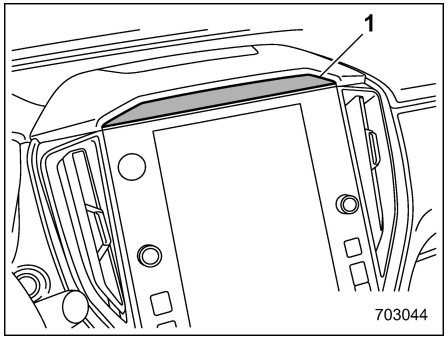

1 Camera

CAUTION

- **Always use the utmost care in driving**
  - **Overconfidence because you are driving a vehicle with the Driver Monitoring System could easily lead to a serious accident.**
- **This system cannot detect if the driver is feeling drowsy or is concentrating on safe driving.**
- **It cannot judge if the driver is awake or asleep, if their driving abilities have diminished, or if they are concentrating on safe**

– CONTINUED –

driving.

- In some circumstances, the system may not be able to correctly detect the driver state.

NOTE

- The user recognition camera does not save images, audio, or video.
- The Driver Monitoring System may not operate correctly when sunlight is shining into the vehicle in the following ways.
  - Sunlight is shining directly (or through glass) onto the user recognition camera.
  - There are shadows on the driver's face caused by sunlight (or any light with a strong infrared component).
  - There are large momentary fluctuations in the strength of the sunlight (or any light with a strong infrared component) shining on the face.
- Correct detection may not be possible when a device that includes an infrared light source (such as a commercially available Driver Monitoring System) is installed in the vehicle interior.
- The Driver Monitoring System may not operate correctly at the following times when the driver is wearing glasses or sunglasses.
  - The sunglasses do not allow the easy passage of infrared light.
  - The surrounding scenery is reflected strongly in the lenses of the glasses or sunglasses.
  - The eyes are hidden by the frame of the glasses and the user recognition camera cannot detect the eyes.
  - The light from an infrared light source (LED) is reflected in the lenses of the glasses or sunglasses.
  - The driver is wearing an eyepatch.
  - The driver is wearing a hat set deeply over the eyes.
- Depending on the type of mask, correct detection of inattentive/drowsy driving may not be possible.
- Correct user recognition is not possible if the eyes, nose, or mouth is covered with a mask, muffler, sunglasses, or other item.
- The Driver Monitoring System may not operate correctly when the eyebrows, eyes, nose, or mouth is hidden due to item that is between the face and the system.
- If a thick cover is attached to the steering wheel, then depending on the position set for the tilt/telescopic steering wheel, the cover may block the system's view of the face, and the system and the Driver Monitoring System may not operate correctly.
- Do not attach any stickers to the user recognition camera or the infrared light source (LED). If the user recognition camera or infrared light source (LED) is covered by an obstruction, it will not be possible to correctly monitor the driver.
- If an accessory is hung from the inside mirror, correct detection may not be possible.
- Do not touch the user recognition camera or the infrared light source (LED) directly with your fingers. If there is dirt or a fingerprint on these parts, it will not be possible to correctly monitor the driver. If there is dirt or a fingerprint on these parts, either wipe them with a soft dry cloth, or wipe gently with a damp cloth after first firmly wringing the water out.
- If the surface of the user recognition camera or the infrared light source (LED) becomes scratched, correct

detection may not be possible. Be careful that hard objects do not contact these parts.

- If there is condensation on the user recognition camera or the infrared light source (LED), correct detection may not be possible. If there is condensation on these parts, wipe it away with a soft dry cloth.
- When registering a user for user recognition, avoid closing your eyes as much as possible.
- If the user recognition success rate is low, it is possible that the user is not correctly registered. Delete the registered data and perform registration again.
- If a user frequently drives both with glasses and contact lenses, it is recommended that registration be performed both when wearing glasses and when wearing contact lenses.
- User recognition starts immediately after entering the vehicle, however if the user looks downward or at the driver side mirror for a long time, the user may not be recognized.
- When one person among twins or another pair of persons with similar facial features is registered, the other person may be incorrectly recognized as the registered user when entering the vehicle.
- If the person in the passenger's seat leans into the driver's seat, or in other cases when there are two or more faces near the driver's seat, the system may not operate correctly.
- There are cases when the system concludes that the user's eyes are closed when the user is looking downward during driving, such as when checking instruments or the navigation screen. In such cases, the drowsy driving warning buzzer may sound or the system may otherwise not operate correctly.
- If the eyes are narrowed when laughing or when there is a dazzling outside light, the system may judge that the eyes are closed and the drowsy driving warning buzzer may sound or the system may otherwise not operate correctly.
- The drowsy driving or asleep warning states are recognized from the length of time and percentage of time that the eyes are closed. The drowsy driving warning buzzer will not sound simply when the driver feels sleepy or yawns.
- Even when the driver does not feel sleepy, if his or her eyes are closed or if he or she blinks frequently, the drowsy driving warning buzzer may sound.
- The inattentive driving warning buzzer may sound if the driver leans forward or puts his or her head out of the window while driving.
- The inattentive driving warning buzzer will not sound when the vehicle is stopped or traveling at slow speed even if the driver is not looking ahead.
- The Driver Monitoring System collects and stores data regarding drivers' facial features. Facial recognition data is stored locally and does not leave the vehicle. It is not transmitted to or stored by SUBARU or anyone else. The Driver Monitoring System may be disabled and any stored driver data may be deleted by following the instructions below. If the Driver Monitoring System is disabled, it will be unable to provide any of its safety or convenience functions.

– CONTINUED –

The functions which are available vary depending on the Driver Monitoring System setting and the user recognition function setting.

Available functions

			Driver Monitoring System*1	
			ON	OFF
User recognition function*2	ON	Inattentive/drowsy driving warning	Available	Not available
		User recognition function	Available	Not available
	OFF	Inattentive/drowsy driving warning	Available	Not available
		User recognition function	Not available	Not available

Available function items

			Driver Monitoring System*1	
			ON	OFF
User recognition function*2	ON	Register User	Available	Not available
		Delete User	Available	Not available
		Delete All Users	Available	Not available
		Update Seat and Mirror Position*3	Available	Not available
		Delete Driver Position*3	Available	Not available
	OFF	Register User	Not available	Not available
		Delete User	Available	Not available
		Delete All Users	Available	Not available
		Update Seat and Mirror Position*3	Not available	Not available
		Delete Driver Position*3	Not available	Not available

*1: The system can be turned ON/OFF with the center information display. Refer to "Car settings" ☞P229.
*2: The function can be turned ON/OFF in the center information display customization settings. Refer to "Car settings" ☞P229.
*3: Models with the driver's seat memory

The functions which are available vary depending on whether or not the user is registered.

Available functions

	The user is registered.	The user is not registered.
User recognition function	Available	Not available

■ User Recognition Function

⚠ WARNING

Perform registration, retrieving, or delete of the seat position and outside mirror angle before beginning driving. There is the risk of an accident if registration, retrieving, or delete is performed while driving.

When a user is registered, it is possible to retrieve the following settings.

▼ Driver position personalization (models with the driver's seat memory)

- Seat position and outside mirror angle

Retrieves the registered seat position and outside mirror angle.

- Reverse tilt angle

Retrieves the registered reverse tilt-down outside mirror angle.

▼ Meter personalization

- Combination meter display basic screen

Displays the screen which the user had selected at the time when he/she last exited the vehicle.

– CONTINUED –

▼ Center information display personalization

- Center information display basic screen

Displays the screen which the user had selected at the time when he/she last exited the vehicle.

- Fuel consumption screen

Displays the average fuel economy for past driving by that user.

▼ Climate control personalization

- Climate control settings

Retrieves the preferred setting temperature, airflow mode selection, and other settings which the user had selected at the time when he/she last exited the vehicle.

NOTE

When a recognized user exits the vehicle while the MAX A/C mode is on and the push engine switch is turned off, the system stores the setting configured before MAX A/C mode was turned on.

▼ Driver Monitoring System ON/OFF status

When the ignition switch is turned to the “ON” position, the Driver Monitoring System ON/OFF status is changed from “OFF” to “ON”.

▼ Car settings

When the Driver Monitoring System recognizes you as a driver, the system will switch some of the car settings to those that were in effect the last time you drove the vehicle.

When “Request Setting Update” is activated, this function records the car settings that were in effect when the engine was last turned off. To set this function, turn on the ignition switch and then follow the update screen to update the following car settings.

- Auto Vehicle Hold function
- SI-DRIVE

For details about how to turn on/off, refer to “Car settings” ☞P229.

▼ Changing the personalization settings

Item		
Driver position personalization (models with the driver's seat memory)	Seat position/outside mirror angle	Change the setting by using the center information display customization function. Refer to "Car settings" ☞P229.
	Reverse tilt-down outside mirror angle	
Car settings	Auto Vehicle Hold function	
	SI-DRIVE	
Meter personalization*	Combination meter display basic screen	When the customization screen linked with the synchronized user function is selected and the setting is changed, it is automatically stored.
Center information display personalization*	Center information display basic screen	
Driver Monitoring System ON/OFF status		

*: When the Driver Monitoring System is OFF, the Driver Monitoring System continues to store the conditions from immediately before the Driver Monitoring System was turned OFF even if the screen was selected and the setting was changed.

■ Inattentive/Drowsy Driving Warning

While driving, the Driver Monitoring System monitors possible cases of driver inattention or drowsiness and warns the driver.

When the inattentive/drowsy driving warning activates, the buzzer sounds and an interrupt display appears.

NOTE

- **The inattentive/drowsy driving warning operates regardless of the status of the user recognition function.**
- **The inattentive driving warning does not activate when the turn signal is operating or when the select lever is in the "R" position.**
- **When the pre-collision brake system OFF indicator is illuminated on the combination meter display, the inattentive driving warning activates at the same timing as usual even when a vehicle ahead or obstacle is detected. For details about the EyeSight system, refer to the Owner's Manual supplement for the EyeSight system.**

– CONTINUED –

▼ **Inattentive driving warning**

Keep Eyes
on Road

702304

When the system monitors that the driver may be inattentive, it warns the driver.

When the inattentive driving warning activates, the buzzer sounds and an interrupt display appears on the combination meter display.

When the EyeSight system has detected a vehicle ahead or obstacle in the forward direction, the inattentive driving warning may activate at earlier timing than usual.

Refer to the Owner's Manual supplement for the EyeSight system.

NOTE

If you take your eyes off the road repeatedly while driving, the system judges your driving to be inattentive and urges you to drive carefully.

▼ Drowsy driving warning

Possible drowsiness is detected from the amount of driver eyelid closure, and a warning is given to the driver. When the drowsy driving warning activates, the buzzer sounds and an interrupt display appears.

	Combination meter display	Center information display	Warning chime
Except Australia models Drowsy driving	Stay Alert!	Stay Alert!	Beep, beep... (Continues until the driver's eyes open.)
Except Australia models Very drowsy			Beep, beep, beep, beep, beep (5 times)
Australia models Drowsy driving	Stay Alert!	Stay Alert!	Beep, beep... (Continues until the driver's eyes open.)
Australia models Very drowsy			Beep, beep, beep, beep, beep (5 times)
Slightly drowsy	Take a Break!	—	Beep
Not drowsy	—	—	—

NOTE

While you are driving, the Driver Monitoring System detects and determines your drowsiness level by monitoring such things as the direction of your face and head position. If the system determines that your drowsiness level has increased and your attention to driving has degraded, it may alert you that you are very drowsy.

■ Driver Monitoring System Indicator/Warning

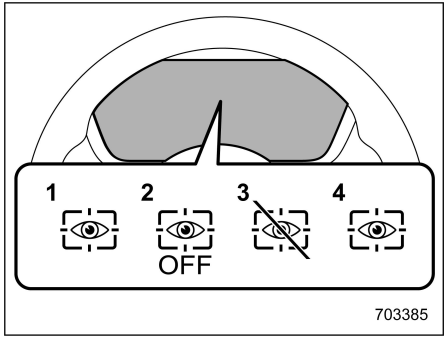

1 Driver Monitoring System operation indicator light (green)
2 Driver Monitoring System OFF indicator light
3 Driver Monitoring System temporary stop indicator light
4 Driver Monitoring System warning light (yellow)

The Driver Monitoring System indicator/warning indicates the status of the Driver Monitoring System on the combination meter display.

– CONTINUED –

NOTE

When the Driver Monitoring System OFF indicator, Driver Monitoring System temporary stop indicator, or Driver Monitoring System warning is illuminated, the Driver Monitoring System function cannot be used. In addition, the following items cannot be selected.

- **Request Setting Update**
- **Automatically Retract Seat on Entry (models with the driver's seat memory)**
- **Register User**
- **Update Seat and Mirror Position (models with the driver's seat memory)**
- **Delete Driver Position (models with the driver's seat memory)**
- **Delete User**
- **Delete All Users**

▼ Driver Monitoring System operation indicator light (green)

This indicator illuminates when the Driver Monitoring System is operating.

▼ Driver Monitoring System OFF indicator light

This indicator illuminates when the user has turned off the Driver Monitoring System and the Driver Monitoring System is not operating.

▼ Driver Monitoring System temporary stop indicator light

This indicator illuminates when the Driver Monitoring System is temporarily stopped.

NOTE

The Driver Monitoring System stops temporarily in the following circumstances.

- **When the temperature of the main unit of the Driver Monitoring System is high or low.**
- **When the Driver Monitoring System cannot monitor the driver's eye movement.**
- **When the Driver Monitoring System cannot monitor the driver's eyebrows, eyes, nose or mouth.**
- **When the camera and the infrared light source (LED) are covered and the Driver Monitoring System cannot monitor the driver correctly.**

▼ Driver Monitoring System warning light (yellow)

This warning illuminates when there is a problem with the Driver Monitoring System. We recommend that you contact a SUBARU dealer to have the system inspected.

■ Using the Driver Monitoring System

▼ User recognition

When a user is registered with the user recognition function, the Driver Monitoring System performs the following.

702400

1. When the door is opened and the push-button ignition switch is OFF, the user recognition screen appears and the Driver Monitoring system starts user recognition.
   The user recognition screen may not appear when the door is opened in some cases, such as when only a short time has passed after the push-button ignition switch was turned OFF. In such cases, user recognition starts when the door is closed however the user

recognition screen does not appear.

703259

2. Sit in the driver's seat and face forward for a few moments.
3. When user recognition is completed, the Hello screen appears on the combination meter display.

At this time, climate control settings, combination meter display basic screen, center information display basic screen, and customization settings all change based on the user information.

NOTE

- **When a center information display operation switch is pressed, the user recognition screen is canceled, however user recognition continues.**
- **If user recognition fails, perform recognition again following the instructions, refer to "When a user is not recognized" ☞P397.**
- **User recognition is not performed while driving.**
- **When the select lever is not in the "P" position, the seat position will not change even when user recognition is completed.**
- **If the seat position or outside mirror angle are in motion at the time when user recognition is completed, then it is not possible to retrieve the seat position, outside mirror angle, or reverse tilt-down outside mirror angle.**
- **If any of the following operations is performed while retrieving of the seat position or outside mirror angle, retrieving of the seat position and outside mirror angle is canceled.**
  - **The power seat adjustment switch was operated.**
  - **The outside mirror adjustment switch was operated.**
  - **The "SET" button was pressed.**
  - **The "1" or "2" button was pressed.**
  - **The select lever was moved to a position other than "P" position.**

▼ When a user is not recognized

In the following case, user recognition may not be possible and "User recognition stopped." may be displayed.

- There is an object blocking the camera.

Remove the obstacle and follow the reference procedure to perform user recognition again.

Refer to "Driver Monitoring System" ☞P236.

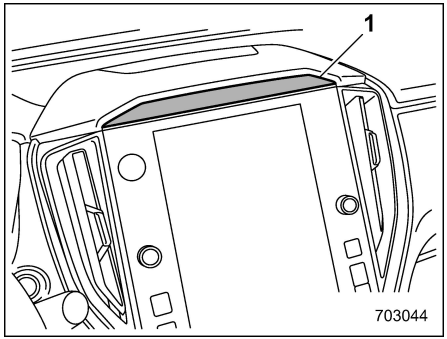

703044

1 Camera

NOTE

- **User recognition may not be possible when there is dirt or fingerprints on the user recognition camera. To clean, either wipe using a soft cloth or else wipe gently using a mois-**

– CONTINUED –

tened cloth that has been thoroughly wrung out.

- **When the synchronized user function is turned OFF, manual repeat facial scan is not possible.**

■ Registering and Deleting a User

Users can be registered in the Driver Monitoring System, and registered users can be deleted. For the user registration and delete procedures, refer to "Driver Monitoring System" ☞P236.

NOTE

- **When the Driver Monitoring System OFF indicator, Driver Monitoring System temporary stop indicator, or Driver Monitoring System warning is illuminated, the following items cannot be selected.**
  - **Register User**
  - **Delete User**
  - **Delete All Users**
- **User information can also be deleted by resetting the center information display to the factory default settings. When the settings are reset to the factory default settings, all user information is deleted. The settings cannot be reset to the factory default settings when the Driver Monitoring System is OFF.**

■ Driver Monitoring System ON/OFF Settings

NOTE

- **When the Driver Monitoring System is turned OFF after user recognition was completed, the user recognition function stores the Driver Monitoring System ON/OFF state.**
- **Even when the Driver Monitoring System is set to OFF, the Driver Monitoring System automatically turns ON once the driver's door is opened and closed while the vehicle is stopped. This only occurs when the user recognition setting is ON. The system then reverts automatically to the OFF state.**
- **After the Driver Monitoring System was turned OFF, if the Driver Monitoring System is turned ON while the driver's door is open, user recognition may not occur correctly.**

▼ To turn on/off the Driver Monitoring System

To turn the Driver Monitoring System on and off, operate the center information display. Refer to "Car settings" ☞P229. When the Driver Monitoring System is turned OFF, the Driver Monitoring System OFF indicator on the combination meter display will illuminate.

NOTE

Even when the Driver Monitoring System is turned off, the user recognition does not switch on or off automatically.

▼ User recognition settings

The Driver Monitoring System User recognition function can be turned ON/OFF. For the setting procedure, refer to "Car settings" ☞P229.

NOTE

- **The user recognition function setting cannot be changed for each individual user.**
- **The default setting for the user recognition function is ON.**
- **When the user recognition function is turned OFF, the following items cannot be selected.**
  - **Request Setting Update**
  - **Repeat Facial Scan**
  - **Register User**
  - **Update Seat and Mirror Position (models with the driver's seat memory)**
  - **Delete Driver Position (models with the driver's seat memory)**

▼ **Automatically retract seat on entry**

The automatically retract seat on entry which automatically slides back the driver's seat when the driver's door is unlocked and opened.

This function can be turned ON/OFF. For the setting procedure, refer to "Car settings" ☞P229.

⚠ CAUTION

Sit in the seat after the power seat movement backward has been completed. Not doing so could result in injury.

NOTE

- **If the seat position is not registered in the access key fob memory, the automatically retract seat on entry function can be used.**
- **Even when the automatically retract seat on entry setting is ON, the automatically retract seat on entry function automatically turns OFF when the user recognition function is OFF.**
- **Automatically retract seat on entry cannot be selected when the Driver Monitoring System OFF indicator, Driver Monitoring System temporary stop indicator, or Driver Monitoring System warning is illuminated.**
- **This function will operate if the seat is in front of the center of the seat sliding mechanism.**

■ How to Get the Source Code That Uses Open Source Software

Free Open-Source Software Information

This product uses Free Open-Source Software (FOSS).

The license information and/or the source code of such FOSS can be found at the following URL:

http://www.embedded-carmultimedia.jp/RTOS/License/oss/DMS_0101/

8-1. New Vehicle Break-In Driving – the First 1,600 km (1,000 miles) 402
8-2. Fuel Economy Hints 402
8-3. Engine Exhaust Gas (Carbon Monoxide)..... 403
8-4. Catalytic Converter 403
8-5. Periodic Inspections 404
8-6. Driving in Foreign Countries 404
8-7. Frequent Driving Prevents 12 V Battery from Discharging 405
8-8. Driving Tips for AWD Vehicles 405
8-9. On-Road and Off-Road Driving..... 407
Before Driving 408
During Driving 408
After Driving 408
8-10. Winter Driving 409
Operation during Cold Weather..... 409
Driving on Snowy and Icy Roads 410
Corrosion Protection 412
Snow Tires..... 412
Tire Chains 412
Rocking the Vehicle 413
8-11. Loading Your Vehicle 413
Roof Rails (If Equipped) 414
Roof Rack (If Equipped) 415
8-12. Trailer Towing (If Equipped) 416
Maintenance..... 416
Towing Weight 416
Trailer Hitches (Dealer Option)..... 417
When You Do Not Tow a Trailer 417
Trailer Safety Chains 417
Outside Mirrors 417
Trailer Lights..... 418
Tires 418
Trailer Towing Tips..... 418
Vehicle Load Capacity 421
Load Distribution 422
Additional Information for Europe..... 423

8-1. New Vehicle Break-In Driving – the First 1,600 km (1,000 miles)

The performance and long life of your vehicle are dependent on how you handle and care for your vehicle while it is new. Follow these instructions during the first 1,600 km (1,000 miles):

- Do not race the engine.
- Do not drive at one constant engine or vehicle speed for a long time, either fast or slow.
- Avoid starting suddenly and rapid acceleration, except in an emergency.
- Avoid hard braking, except in an emergency.

The same break-in procedures should be applied to a newly installed or overhauled engine or when brake pads are replaced with new ones.

8-2. Fuel Economy Hints

The following suggestions will help to save your fuel.

- Select the proper gear position for the speed and road conditions.
- Avoid sudden acceleration or deceleration. Always accelerate gently until you reach the desired speed. Then try to maintain that speed for as long as possible.
- Do not pump the accelerator and avoid racing the engine.
- Avoid unnecessary engine idling.
- Keep the e-BOXER system properly tuned.
- Keep the tires inflated to the correct pressure shown on the tire inflation pressure label, which is located under the door latch on the driver's side. Low pressure will increase tire wear and fuel consumption.
- Use the air conditioner only when necessary.
- Keep the front and rear wheels in proper alignment.
- Avoid carrying unnecessary luggage or cargo.
- The indication of the ECO area for power meter shows a reference for saving fuel. For details, refer to "Power Meter" ☞P175.

8-3. Engine Exhaust Gas (Carbon Monoxide)

WARNING

- **Never inhale engine exhaust gas. Engine exhaust gas contains carbon monoxide, a colorless and odorless gas which is dangerous, or even lethal, if inhaled.**
- **Always properly maintain the engine exhaust system to prevent engine exhaust gas from entering the vehicle.**
- **Never run the engine in a closed space, such as a garage, except for the brief time needed to drive the vehicle in or out of it.**
- **Avoid remaining in a parked vehicle for a long time while the engine is running. If that is unavoidable, then use the ventilation fan to force fresh air into the vehicle.**
- **Always keep the front ventilator inlet grille free from snow, leaves or other obstructions to ensure that the ventilation system always works properly.**
- **If at any time you suspect that exhaust fumes are entering the vehicle, have the problem checked and corrected as soon as possible. If you must drive under these conditions, drive only with all windows fully open.**
- **Keep the rear gate closed while driving to prevent exhaust gas from entering the vehicle.**

NOTE

Due to the expansion and contraction of the metals used in the manufacture of the exhaust system, you may hear a crackling sound coming from the exhaust system for a short time after the e-BOXER system has been shut off. This sound is normal.

8-4. Catalytic Converter

WARNING

- **Avoid fire hazards. Do not drive or park the vehicle anywhere near flammable materials (e.g. grass, paper, rags or leaves), because the catalytic converter operates at very high temperatures.**
- **Keep everyone and flammable materials away from the exhaust pipe while the e-BOXER system is running. The exhaust gas is very hot.**

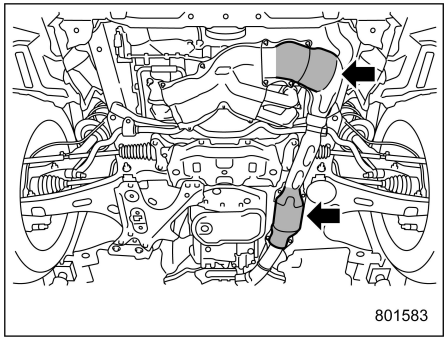

The catalytic converter is installed in the

– CONTINUED –

exhaust system. It serves as catalyst to reduce HC, CO and NOx in exhaust gases, thus providing cleaner exhaust.

To avoid damage to the catalytic converter:

- Use only unleaded fuel. Even a small amount of leaded fuel will damage the catalytic converter.
- Never start the e-BOXER system by pushing or pulling the vehicle.
- Avoid racing the engine.
- Never turn off the ignition switch while the vehicle is moving.
- Keep your engine tuned-up. If you feel the engine running rough (misfiring, backfiring or incomplete combustion), we recommend that you have your vehicle checked and repaired by an authorized SUBARU dealer.
- Do not apply undercoating or rust prevention treatment to the exhaust system.
- Do not drive with an extremely low fuel level.

8-5. Periodic Inspections

To keep your vehicle in the best condition at all times, have it inspected at the specified time or mileage intervals and according to the recommended maintenance services listed in the maintenance schedule.

8-6. Driving in Foreign Countries

When planning to use your vehicle in another country:

- Confirm the availability of the correct fuel. Refer to “Fuel Requirements” ☞P313.
- Comply with all regulations and requirements of each country.

8-7. Frequent Driving Prevents 12 V Battery from Discharging

Vehicle batteries are a consumable item. If the battery charge is not maintained regularly, the battery will deteriorate and may require replacement sooner than expected. The battery is charged while the e-BOXER system READY indicator light is illuminated. It is recommended to drive the car for a longer time occasionally to prevent the 12 V battery from becoming drained, especially if it is regularly driven only a short time daily (e.g. only 10 minutes) or if it is parked for 10 days or more. It may be possible to recover the state of charge and maintain the battery performance by driving for a longer time (e. g. more than 30 minutes). If you cannot drive enough, we recommend to charge the battery as needed. If no action is taken, the battery will become discharged. This is a normal characteristic of any battery.

8-8. Driving Tips for AWD Vehicles

WARNING

- **Always maintain a safe driving speed according to the road and weather conditions in order to avoid having an accident on a sharp turn, during sudden braking or under other similar conditions.**
- **Always use the utmost care in driving – overconfidence because you are driving an All-Wheel Drive vehicle could easily lead to a serious accident.**
- **When replacing or installing tire(s), all four tires must be the same for the following items.**

  (a) Size

  (b) Speed symbol

  (c) Load index

  (d) Circumference

  (e) Construction

  (f) Manufacturer

  (g) Brand (tread pattern)

  (h) Degrees of wear

  For items (a) to (c), you must obey the specification that is printed on the tire inflation pressure label. The tire inflation pressure label is located on the driver's door pillar.

  If all four tires are not the same in items (a) to (h), serious mechanical damage could be caused to the drivetrain of the car, and affect the followings.

  – Ride

  – Handling

  – Braking

  – Speedometer/Odometer calibration

  – Clearance between the body and the tires

  It also may be dangerous and lead to loss of vehicle control, and it can lead to an accident.

– CONTINUED –

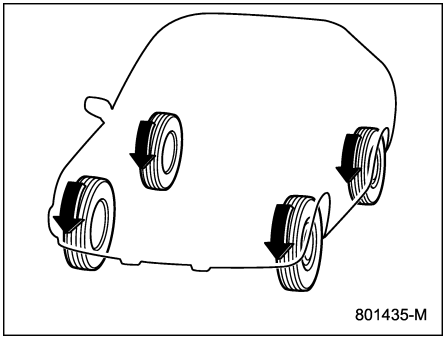

All-Wheel Drive distributes the e-BOXER system power to all four wheels. AWD vehicles provide better traction when driving on slippery, wet or snow-covered roads and when moving out of mud, dirt and sand. By shifting power between the front and rear wheels, SUBARU AWD can also provide added traction during acceleration, and added engine braking force during deceleration.

Therefore, your SUBARU AWD vehicle may handle differently than an ordinary two wheel drive vehicle and it contains some features unique to AWD. For safety purposes as well as to avoid damaging the AWD system, you should keep the following tips in mind:

- An AWD vehicle is better able to climb steeper roads under snowy or slippery conditions than a two wheel drive vehicle. There is little difference in handling, however, during extremely sharp turns or sudden braking. Therefore, when driving down a slope or turning corners, be sure to reduce your speed and maintain an ample distance from other vehicles.
- Never attempt to drive through pools and puddles, or roads flooded with water. Water entering the engine air intake or the exhaust pipe or water splashing onto electrical parts may damage your vehicle and may cause it to stall.
- An AWD vehicle can be used to traverse difficult areas covered with snow, mud and slush, or sand and dirt. It is, however, designed as an all-road vehicle and not as an all-terrain vehicle. For this reason, an AWD vehicle should be handled with as much care as an ordinary passenger vehicle.
- Always check your brakes for effectiveness immediately after driving in sand, mud or puddle. Do this by driving slowly and stepping on the brake pedal. Repeat that process several times to dry out the brake discs and brake pads.
- Always check the cold tire pressure before starting to drive. The recommended tire pressure is provided on the tire inflation pressure label, which is located on the door pillar on the driver's side.
- Tire chains should always be placed on the front wheels only.
- Frequent driving of an AWD vehicle under hard-driving conditions such as steep hills or dusty roads will necessitate more frequent replacement of the following items than that specified in the "Maintenance Schedule" ☞P467.
  - Engine oil
  - Brake fluid
  - Rear differential gear oil
  - Continuously variable transmission fluid
  - Front differential gear oil
- There are some precautions that you must observe when towing your vehicle. For detailed information, refer to "Towing" ☞P444.

8-9. On-Road and Off-Road Driving

WARNING

- **In a rollover crash, an unbelted person is significantly more likely to die than a person wearing a seatbelt. The driver and all passengers should fasten their seatbelts before starting to drive in order to minimize the chance of serious injury or death.**
- **Do not make sharp turns or quick maneuvers unless absolutely unavoidable. Such actions are dangerous, as you may lose control, possibly resulting in a rollover which could cause death or serious injury.**
- **Always maintain a safe driving speed according to the road and weather conditions in order to avoid having an accident on a sharp turn, during sudden braking or under other similar conditions.**
- **Always use the utmost care in driving – overconfidence because you are driving an All-Wheel Drive vehicle could easily lead to a serious accident.**
- **Whenever strong crosswinds are present, slow down sufficiently to maintain control of your vehicle. Remember that your vehicle, with its higher profile and center of gravity, is more likely to be affected by crosswinds than ordinary passenger cars.**
- **Never attempt to drive through pools and puddles, or roads flooded with water. Water entering the engine air intake or the exhaust pipe or water splashing onto electrical parts may damage your vehicle and may cause it to stall. In this case, we recommend that you contact your SUBARU dealer immediately. Regardless of its depth, it can wash away the ground from under your tires, resulting in possible loss of traction and even vehicle rollover.**

CAUTION

- **Frequent driving of an AWD model under hard-driving conditions such as rough roads or off roads will necessitate more frequent replacement of the following items than that specified in the "Maintenance Schedule" ☞P467.**
  - **Engine oil**
  - **Brake fluid**
- **After driving on gravel roads or rough roads, check the undercarriage of the vehicle body for any damage, deformation, or paint removal. If you notice any irregularities, contact a SUBARU dealer for an inspection as soon as possible.**

Your vehicle is classified as a utility vehicle. Utility vehicles feature a higher ground clearance which enables them to be used for wide applications including off-road driving. But please keep in mind that your vehicle is neither a conventional off-road vehicle nor an all-terrain vehicle. A higher center of gravity in relation to the tread width as compared with ordinary passenger cars makes vehicles of this type more likely to roll over. In reality, utility vehicles have a significantly higher roll-over rate than other types of vehicles. The high ground clearance of this vehicle is a real advantage, giving you a better view of the road and allowing you to anticipate problems earlier. However, remember that your utility vehicle is not designed for high-speed cornering comparable to ordinary

– CONTINUED –

passenger cars and that your vehicle could roll over if you make a sharp turn at high speed.
If you take your SUBARU off-road, certain common sense precautions such as the following should be taken.

■ Before Driving

- Make certain that you and all of your passengers are wearing seatbelts.
- Carry some emergency equipment, such as a towing rope or chain, a shovel, wheel blocks, first aid kit and cell phone or citizens band radio.
- Secure all cargo carried inside the vehicle and make certain that it is not piled higher than the seatbacks. During sudden stops or jolts, unsecured cargo could be thrown around in the vehicle and cause injury. Do not pile heavy loads on the roof. Those loads raise the vehicle's center of gravity and make it more prone to tip over.
- Never equip your vehicle with tires larger than those specified in this manual.

■ During Driving

General precautions:

- Drive carefully. Do not take unnecessary risks by driving in dangerous areas or over rough terrain.
- Slow down and employ extra caution at all times. When driving off-road, you will not have the benefit of marked traffic lanes, banked curves, traffic signs and the like.
- Do not drive across steep slopes. Instead, drive either straight up or straight down the slopes. A vehicle can much more easily tip over sideways than it can end over end. Avoid driving straight up or down slopes that are too steep.
- Avoid sharp turning maneuvers, especially at higher speeds.
- Do not grip the inside or spokes of the steering wheel. A bad bump could jerk the wheel and injure your hands. Instead, drive with your fingers and thumbs on the outside of the rim.
- Do not drive or park over or near flammable materials such as dry grass or fallen leaves, as they may burn easily. The exhaust system is very hot while the e-BOXER system is running and right after the e-BOXER system stops. This could create a fire hazard.

Precautions when driving under especially dangerous situations:

- If you must rock the vehicle to free it from sand or mud, depress the accelerator pedal slightly and move the select lever back and forth between "D" and "R" repeatedly. Do not race the engine. For the best possible traction, avoid spinning the wheels when trying to free the vehicle.
- When the road surface is extremely slippery, you can obtain better traction by starting the vehicle with the transmission in 2nd than 1st. Refer to "Selection of Manual Mode" ☞P327.

■ After Driving

- Always check your brakes for effectiveness immediately after driving in sand, mud or water. Do this by driving slowly and stepping on the brake pedal. Repeat that process several times to dry out the brake discs and brake pads.
- After driving through tall grass, mud, rocks, sand, rivers, etc., check that there is no grass, bush, paper, rags, stones, sand, etc. adhering to or trapped on the underbody. Clear off any such matter from the underbody. If the vehicle is used with these materials trapped or adhering to the underbody, a mechanical breakdown or fire could

occur.

- Wash the vehicle's underbody after off-road driving. Suspension components are particularly prone to dirt buildup, so they need to be washed thoroughly.

8-10. Winter Driving

■ Operation during Cold Weather

Carry some emergency equipment, such as a window scraper, a bag of sand, flares, a small shovel and jumper cables.

Check the 12 V battery and cables. Cold temperatures reduce 12 V battery capacity. The 12 V battery must be in good condition to provide enough power for cold winter starts.

It normally takes longer to start the e-BOXER system in very cold weather conditions. Use an engine oil of a proper grade and viscosity for cold weather. Using heavy summer oil will make it harder to start the e-BOXER system.

Keep the door locks from freezing by squirting them with deicer or glycerin.

Forcing a frozen door open may damage or separate the rubber weather strips around the door. If the door is frozen, use hot water to melt the ice, and afterwards thoroughly wipe the water away.

Use a windshield washer fluid that contains an antifreeze solution. Do not use engine antifreeze or other substitutes because they may damage the paint of the vehicle.

If you fill the washer fluid tank with a fluid with a different concentration from the one used previously, purge the old fluid from the piping between the washer fluid tank and washer nozzles by operating the washer for a certain period of time. Otherwise, if the concentration of the fluid remaining in the piping is too low for the outside temperature, it may freeze and block the nozzles.

⚠ CAUTION

- **Adjust the washer fluid concentration appropriately for the outside temperature. If the concentration is inappropriate, sprayed washer fluid may freeze on the windshield and obstruct your view, and the fluid may freeze in the washer fluid tank.**
- **Be careful foreign matter does not contaminate the washer fluid when filling the tank. Contamination could cause malfunctions, such as clogging the pump.**
- **State or local regulations on volatile organic compounds may restrict the use of methanol, a common windshield washer antifreeze additive. Washer fluids**

– CONTINUED –

containing non-methanol anti-freeze agents should be used only if they provide cold weather protection without damaging your vehicle's paint, wiper blades or washer system.

▼ Before driving your vehicle

Before entering the vehicle, remove any snow or ice from your shoes because that could make the pedals slippery and driving dangerous.

While warming up the vehicle before driving, check that the accelerator pedal, brake pedal, and all other controls operate smoothly.

Clear away ice and snow that has accumulated under the fenders to avoid making steering difficult. During severe winter driving, stop when and where it is safe to do so and check under the fenders periodically.

▼ Parking in cold weather

⚠ WARNING

Snow can trap dangerous exhaust gases under your vehicle. Keep snow clear of the exhaust pipe and from around your vehicle if you park the vehicle in snow with the e-BOXER system running.

⚠ CAUTION

- **Do not use the parking brake when parking for long periods in cold weather since it could freeze in that position.**
- **When the vehicle is parked in snow or when it snows, raise the wiper blades off the glass to prevent damage to them.**
- **Under either of the following conditions, icing may develop on the brake system, which could cause poor braking action.**
  - **When the vehicle has been left parked after use on roads heavily covered with snow**
  - **When the vehicle has been left parked during a snowstorm**

  Check for snow or ice buildup on the suspension, disc brakes and brake hoses underneath the vehicle. If there is caked snow or ice, remove it, being careful not to damage the disc brakes and brake hoses and ABS harness.

When parking for long periods in cold weather, you should observe the following tips.

1. Place the select lever in the "P" position.
2. Use tire stops under the tires to prevent the vehicle from moving.

▼ Refueling in cold weather

To help prevent moisture from forming in the fuel system and the risk of its freezing, use of an antifreeze additive in the fuel tank is recommended during cold weather.

Use only additives that are specifically designed for this purpose. When an anti-freeze additive is used, its effect lasts longer if the tank is refilled whenever the fuel level reaches half empty.

If your SUBARU is not going to be used for an extended period, it is best to have the fuel tank filled to capacity.

■ Driving on Snowy and Icy Roads

⚠ WARNING

Do not use the cruise control on slippery roads such as snowy or icy roads. This may cause loss of vehicle control.

⚠ CAUTION

Avoid prolonged continuous driving in snowstorms. Snow will enter the engine's intake system and may hinder the airflow, which could result in engine shutdown or even breakdown.

To prevent skidding and slipping, avoid sudden braking, abrupt acceleration, high-speed driving, and sharp turning when driving on snowy or icy roads.

Always maintain ample distance between your vehicle and the vehicle ahead of you to avoid the need for sudden braking.

To supplement the foot brake, use the engine brake effectively to control the vehicle speed. (Shift into a lower gear when necessary.)

Avoid shifting down abruptly. Such behavior can cause the wheels to lock, possibly leading to loss of vehicle control.

An anti-lock brake system (ABS) enhances your vehicle's braking performance on snowy and icy roads. For information about braking on slippery surfaces, refer to "ABS (Anti-Lock Brake System)" ☞P333 and "Vehicle Dynamics Control System" ☞P335.

▼ Wiper operation when snowing

Before driving in cold weather, make sure the wiper blade rubbers are not frozen to the windshield or rear window.

If the wiper blade rubbers are frozen to the windshield or rear window, perform the following procedure.

- To thaw the windshield wiper blade rubbers, use the defroster with the airflow selection in "" and the temperature set for maximum warmth until the wiper blade rubbers are completely thawed. Refer to "Defrosting" ☞P281.
- If your vehicle is equipped with a wiper deicer, use it. It is helpful to thaw the windshield wiper blade rubbers. Refer to "Defogger and Deicer" ☞P263.
- To thaw the rear wiper blade rubbers, use the rear window defogger. Refer to "Defogger and Deicer" ☞P263.

When driving in snow, if frozen snow starts to stick on the surface of the windshield despite wiper operation, use the defroster with the airflow selection in "" and the temperature set for maximum warmth. After the windshield gets warmed enough to melt the frozen snow on it, wash it away using the windshield washer. Refer to "Windshield washer" ☞P260.

Snow stuck on the wiper arm prevents the wiper from working effectively. If snow is stuck on the wiper arm, pull off the road to a safe place, then remove it. If you stop the vehicle at road side, use the hazard warning flasher to alert other drivers. Refer to "Hazard Warning Flasher" ☞P174.

We recommend use of non-freezing type wiper blades (winter blades) during the seasons you could have snow and freezing temperatures. Blades of this type give superior wiping performance in snowy conditions. Be sure to use blades that are suitable for your vehicle.

⚠ CAUTION

During high-speed driving, non-freezing type wiper blades may not perform as well as standard wiper blades. If this happens, reduce the vehicle speed.

NOTE

When the season requiring non-freezing type wiper blades is over, replace them with standard wiper blades.

– CONTINUED –

■ Corrosion Protection

Refer to “Corrosion Protection” ☞P460.

■ Snow Tires

⚠ WARNING

- **When replacing or installing winter tire(s), all four tires must be the same for the following items.**

  (a) Size

  (b) Speed symbol

  (c) Load index

  (d) Circumference

  (e) Construction

  (f) Manufacturer

  (g) Brand (tread pattern)

  (h) Degrees of wear

  For items (a) to (c), you must obey the specification that is printed on the tire inflation pressure label. The tire inflation pressure label is located on the driver’s door pillar.

  If all four tires are not the same in items (a) to (h), serious mechanical damage could be caused to the drivetrain of the car, and affect the followings.

  – Ride

  – Handling

  – Braking

  – Speedometer/Odometer calibration

  – Clearance between the body and the tires

  It also may be dangerous and lead to loss of vehicle control, and it can lead to an accident.

- **Do not use a combination of radial, belted bias or bias tires since it may cause dangerous handling characteristics and lead to an accident.**

In winter, it may be possible to enhance performance through use of tires designed specifically for winter driving conditions. If you choose to install winter tires on your vehicle, be sure to use the correct tire size and type. All four tires must be of the same size, construction, brand and load index and you should never mix radial, belted bias or bias tires since this may result in dangerous handling characteristics.

⚠ CAUTION

If 19-inch snow tires are installed, the tires may make contact with the fenders and damage the tires and the vehicle body. Vehicles equipped with 19-inch tires must be equipped with 18-inch snow tires. For information on tire sizes, check the tire inflation pressure label.

Remember to drive with care at all times regardless of the type of tires on your vehicle.

■ Tire Chains

If it is necessary to use the tire chains for driving on snowy grades or icy roads, observe the following precautions:

- Put the chains on the front wheels only.
- Use only chains that are of the correct size for your tires so as not to damage the vehicle body or suspension. We recommend that you consult your SUBARU dealer for information about the chains that you can use.
- When driving with tire chains, drive at speeds below 30 km/h (19 mph).
- After installing tire chains, check that the area around the inner sidewall of the tire is not touching to the brake piping, suspension or vehicle body.

Always use the utmost care when driving with tire chains – overconfidence because you are driving with tire chains could easily

lead to a serious accident.

WARNING

When any of the tires is punctured, you can seal the tire temporarily. However, do not use the tire chain on a sealed tire. If either of the front tires is punctured although it is required to use tire chains, we recommend that you contact the nearest SUBARU dealer.

CAUTION

If tire chains are attached to the 19-inch tires, the tire chains may make contact with the fenders and damage the vehicle body. If the vehicle is equipped with 19-inch tires, replace them with 18-inch tires and install tire chains. For information on tire sizes, check the tire inflation pressure label.

■ Rocking the Vehicle

If you must rock the vehicle to free it from snow, sand, or mud, depress the accelerator pedal slightly and move the select lever back and forth between “D” and “R” repeatedly. Do not race the engine. For the best possible traction, avoid spinning the wheels when trying to free the vehicle.

When the road surface is extremely slippery, you can obtain better traction by starting the vehicle with the transmission in 2nd than 1st.

For information on holding the transmission in 2nd position, refer to “Selection of Manual Mode” ☞P327.

8-11. Loading Your Vehicle

WARNING

Never allow passengers to ride on a folded rear seatback, in the cargo area. Doing so may result in serious injury.

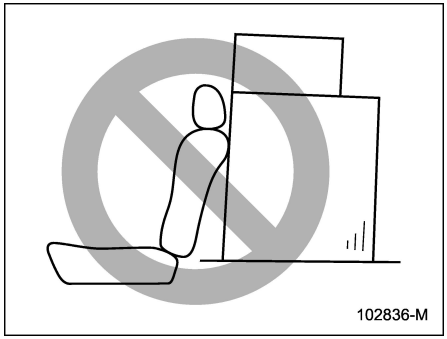

WARNING

- **Never stack luggage or other cargo higher than the top of the seatback because it could tumble forward and injure passengers in the event of a sudden stop or accident. Keep luggage or cargo low, as close to the floor as**

– CONTINUED –

possible.

- When you carry something inside the vehicle, secure it whenever you can to prevent it from being thrown around inside the vehicle during sudden stops, sharp turns or in an accident.
- Do not pile heavy loads on the roof. These loads raise the vehicle's center of gravity and make it more prone to tip over.
- Secure long items properly to prevent them from shooting forward and causing serious injury during a sudden stop.
- Never exceed the maximum load limit. If you do, some parts on your vehicle can break, or it can change the way your vehicle handles. This could result in loss of control and cause personal injury. Also, overloading can shorten the life of your vehicle.
- Do not place anything on the rear shelf behind the extended cargo area cover. Such items could tumble forward in the event of a sudden stop or a collision. This could cause serious injury.

CAUTION

Do not carry spray cans, containers with flammable or corrosive liquids or any other dangerous items inside the vehicle.

NOTE

For better fuel economy, do not carry unneeded cargo.

■ Roof Rails (If Equipped)

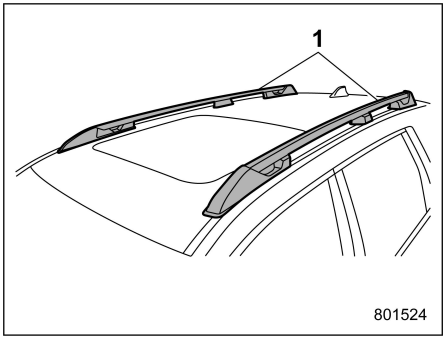

1 Roof rails

Cargo can be carried on the roof after securing the roof crossbars to the roof rails and installing the appropriate carrying attachments. When installing the roof crossbars and the carrying attachments, follow the manufacturer's instructions. The roof rail system is designed to carry loads (cargo, roof crossbars and carrying attachments) of no more than **80 kg (176 lbs)**. Be sure not to exceed your vehicle's GVWR and GAWR.

CAUTION

- **When using the carrying attachments, make sure that the total carrying load of the cargo, roof crossbars and carrying attachments does not exceed 80 kg (176 lbs). Overloading may cause damage to the vehicle. Read the manufacturer's instructions and pay attention to not exceed the load limit of the parts.**
- **For cargo carrying purposes, the roof rails must be used together with the SUBARU recommended roof crossbars and any appropriate carrying attachment that may be needed. The roof rails must never be used alone to carry cargo. Otherwise, damage to the roof or paint, or a dangerous road hazard due to loss of cargo could result.**

NOTE

Remember that the vehicle's center of gravity is altered with the weight of the load on the roof, thus affecting driving characteristics.

Drive carefully. Avoid rapid starts, hard cornering and abrupt stops. Crosswind effects will be increased.

■ Roof Rack (If Equipped)

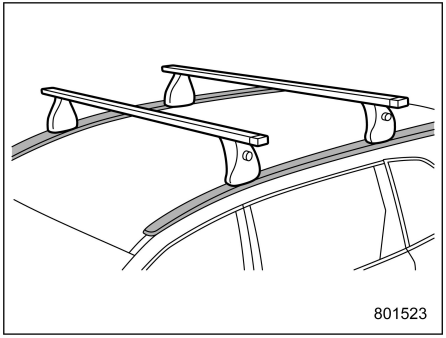

⚠ CAUTION

- **For cargo carrying purposes, the roof rail must be used together with the roof rack. The roof rail must never be used alone to carry cargo. Otherwise, damage to the roof or paint or a dangerous road hazard due to loss of cargo could result.**
- **When using the roof rack, make sure that the total weight of the roof rack, carrying attachments and cargo does not exceed the maximum load limit. Overloading may cause damage to the vehicle and create a safety hazard.**

Cargo can be carried on the roof after securing the roof rack to the roof. When installing the roof rack on the roof, follow the manufacturer's instructions.

The maximum load limit of the cargo, roof rack and carrying attachments must not exceed 80 kg (176 lbs). Place the heaviest load at the bottom, nearest the roof, and evenly distribute the cargo. Always properly secure all cargo.

▼ Installing carrying attachments on the roof rack

When installing any carrying attachments such as the load carriers, crossbars, bike carrier, ski carrier, kayak carrier, cargo basket, etc., follow the manufacturer's instructions of the load capacity and make sure that the attachments are securely installed. Use only attachments designed specifically for the crossbars. Before operating the vehicle, make sure that the cargo is properly secured on the attachment.

NOTE

Remember that the vehicle's center of gravity is altered with the weight of the load on the roof, thus affecting the driving characteristics.

Drive carefully. Avoid rapid starts, hard cornering and abrupt stops. Crosswind effects will be increased.

8-12. Trailer Towing (If Equipped)

⚠ WARNING

- **When any of the tires are punctured, you can seal the tire temporarily. However, do not tow a trailer when a sealed tire is used. We recommend that you consult the nearest SUBARU dealer for details.**
- **Use only the ball mount that is suitable for the trailer hitch. Use the hitch only as a weight carrying hitch. Do not use with any type of weight distributing hitch.**
- **The standard bumper beam must be installed after you remove the trailer hitch. We recommend that you consult a SUBARU dealer for purchase of a standard bumper beam if you do not have the original.**
- **Safety performance is decreased and there is increased risk of injury to passengers in the case of an accident if the trailer hitch or a standard bumper beam is not installed. One of them must always be installed on the vehicle.**
- **If a trailer hitch is installed, it is not possible to install the rear towing hook (eye bolt).**

Your vehicle is designed and intended to be used primarily as a passenger-carrying vehicle. Towing a trailer puts additional loads on your vehicle's e-BOXER system, drive train, brakes, tires and suspension and has an adverse effect on fuel economy.

In some countries, there are some regulations which you have to obey when towing a trailer. If you do decide to tow a trailer, your safety and satisfaction depend upon proper use of correct equipment and cautious operation of your vehicle. We recommend that you seek the advice of your SUBARU dealer to assist you in purchasing a hitch and other necessary towing equipment appropriate for your vehicle. In addition, be sure to follow the instructions on correct installation and use provided by the trailer and other towing equipment manufacturers.

SUBARU assumes no responsibility for injuries or vehicle damage that result from trailer towing equipment, or from any errors or omissions in the instructions accompanying such equipment or for your failure to follow the proper instructions.

■ Maintenance

If you use your vehicle to tow a trailer, more frequent maintenance will be required due to the additional load. Refer to "Maintenance Schedule" ☞P467.

Under no circumstances should a trailer be towed with a new vehicle or a vehicle with any new powertrain component (engine, transmission, differential, wheel bearings, etc.) for the first 1,600 km (1,000 miles) of driving.

■ Towing Weight

Before towing a trailer, we recommend that you confirm the towing capacity and ball coupling load with your nearest SUBARU dealer or the vehicle registration documents and/or hitch installation manual and make sure your trailer is within the towing capacity.

The total trailer weight (trailer weight with brakes plus its cargo weight) must never exceed the maximum towing weight.

Remember that the ball coupling load will increase the load on the vehicle. Both the maximum permissible weight (MPW) and/or gross vehicle mass (GVM) and maximum permissible rear axle weight (rear MPAW) and/or rear gross axle laden rating (rear GALR) must not be exceeded.

WARNING

Never exceed the maximum towing weight. Exceeding the maximum towing weight could cause personal injury and/or vehicle damage.

■ Trailer Hitches (Dealer Option)

The use of a genuine SUBARU trailer hitch is recommended. Consult your SUBARU dealer for details.

Regularly check that the hitch mounting bolts and nuts are tightened securely.

CAUTION

Do not modify the vehicle exhaust system, brake system, or other system when installing a hitch or other trailer towing equipment.

■ When You Do Not Tow a Trailer

CAUTION

- **The housing should be kept dirt and corrosion-free at the points of contact. The surfaces only require cleaning with a cloth. Grease or other lubricants should never be used.**
- **If the ball is not installed, the plastic insert should then be inserted for protection and to keep it clean.**

When the ball is not used, place the ball cap and store securely.

■ Trailer Safety Chains

In case the trailer hitch connector or hitch ball should break or become disconnected, the trailer could get loose and create a traffic safety hazard.

For safety, always connect the towing vehicle and trailer with trailer safety chains.

Fix type trailer hitch:

Two chains should be used in total, one for the right side and one for the left side trailer tongues. Pass the chains crossing each other under the trailer tongue to prevent the trailer from dropping onto the ground in case the trailer tongue should disconnect from the hitch ball.

Detachable type trailer hitch:

One chain to be attached to the eyelet on the left side of the towing hook.

Allow sufficient slack in the chains taking tight-turn situations into account; however, be careful not to let them drag on the ground.

For more information about the safety chain connection, refer to the instructions for your hitch and trailer.

■ Outside Mirrors

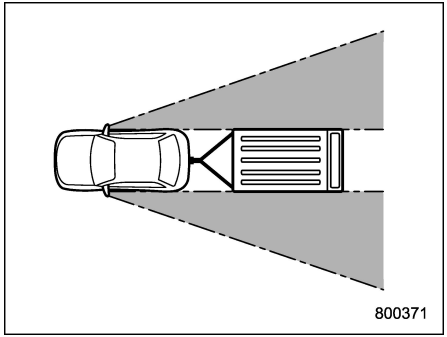

Many countries have regulations requiring special outside mirrors when towing a trailer. After hitching a trailer to your vehicle, check that the standard side mirrors provide a good rearward field of view without significant blind spots. If significant blind spots occur with the vehicle's standard side mirrors, use additional outside mirrors that conform with regulations.

– CONTINUED –

■ Trailer Lights

Connection of trailer lights to your vehicle's electrical system requires modifications to the vehicle's lighting circuit to increase its capacity and accommodate wiring changes. To ensure the trailer lights are connected properly, we recommend that you consult your SUBARU dealer. Check for proper operation of the turn signals and the brake lights each time you connect a trailer to your vehicle.

⚠ CAUTION

Direct splicing or other improper connection of trailer lights may damage your vehicle's electrical system and cause a malfunction of your vehicle lighting system.

■ Tires

Make sure that all the tires on your vehicle are inflated to the pressure under towing conditions as shown on the tire inflation pressure label located on the door pillar on the driver's side.

Trailer tire condition, size, load rating and proper inflation pressure should be in accordance with the trailer manufacturer's specifications.

■ Trailer Towing Tips

⚠ WARNING

- **Never exceed 80 km/h (50 mph) or legal towing speed limit, whichever is lower. Exceeding the speed limit could cause loss of vehicle stability and/or could lead to an accident.**
- **When driving uphill in hot weather, the air conditioner may turn off automatically to protect the engine from overheating.**
- **When driving uphill in hot weather, pay attention to Engine coolant temperature gauge because the engine and transmission are relatively prone to overheating.**
- **When towing a trailer, steering, stability, stopping distance and braking performance will be different when compared to normal operation. You should never drive at excessive speeds but always employ extra caution when towing a trailer. You should also keep the following tips in mind.**

⚠ CAUTION

- **For models equipped with the Subaru Rear Vehicle Detection (SRVD), when towing a trailer, touch "Rear Vehicle Detection (SRVD)" to deactivate the system. The system may not operate properly due to the blocked radar waves. For details about how to turn on/off the Subaru Rear Vehicle Detection (SRVD), refer to "Car settings" ☞P229.**
- **For models equipped with Reverse Automatic Braking (RAB) system, consult your SUBARU dealer for additional information about towing a trailer.**
- **Towing a trailer in high temperatures, or on long or steep grades, pay attention to Coolant temperature gauge because the engine and transmission are relatively prone to overheating. Refer to "Engine Overheating" ☞P443.**

If your vehicle is equipped with SI-DRIVE, and when towing a trailer on an uphill slope, do not drive in the Intelligent (I) mode. It is recommended that you drive in the Sport (S) mode.

However, it is possible to tow a trailer in

any mode of the SI-DRIVE on a downhill slope.

▼ Before starting out on a trip

- Be sure to check regulations concerning the maximum speed or driving restrictions for vehicles towing trailers. If you are driving across several countries, check each country's requirement before leaving home, because regulations may vary.
- Check that the vehicle and vehicle-to-hitch mounting are in good condition. If any problems are apparent, do not tow the trailer.
- Check that the vehicle rests horizontally with the trailer attached. If the vehicle is tipped sharply up at the front and down at the rear, check the drawbar weight and the weight on the rear axle do not exceed the maximum permissible rear axle weight.
- Check that the tire pressures are correct.
- Check that the vehicle and trailer are connected properly. Confirm that:
  - The trailer tongue is connected properly to the hitch ball.
  - The trailer lights connector is connected properly and trailer's brake lights illuminate when the vehicle's brake pedal is depressed, and that the trailer's turn signal lights flash when the vehicle's turn signal lever is operated.
  - The safety chains are connected properly.
  - All cargo in the trailer is secured safely in position.
  - The outside mirrors provide a good rearward field of view without a significant blind spot.

▼ Driving with a trailer

- You should allow for considerably more stopping distance when towing a trailer. Avoid sudden braking because it may result in skidding or jackknifing and loss of control.
- Avoid abrupt starts and sudden accelerations.
- Avoid uneven steering, sharp turns and rapid lane changes.
- Slow down before turning. Make a longer than normal turning radius because the trailer wheels will be closer than the vehicle wheels to the inside of the turn. In a tight turn, the trailer could hit your vehicle.
- Sufficient time should be taken to learn the "feel" of the vehicle/trailer combination before starting out on a trip. In an area free of traffic, practice turning, stopping and backing up.
- Crosswinds will adversely affect the handling of your vehicle and trailer, causing sway. Crosswinds can be due to weather conditions or the passing of large trucks or buses. If swaying occurs, firmly grip the steering wheel and promptly begin decelerating your vehicle at a gradual pace.
- When passing other vehicles, considerable distance is required because of the added weight and length caused by attaching the trailer to your vehicle.
- Reversing with a trailer can be difficult and takes practice. When reversing with a trailer, never accelerate or steer rapidly. When reversing with a trailer, grip the bottom of the steering wheel with one hand.

– CONTINUED –

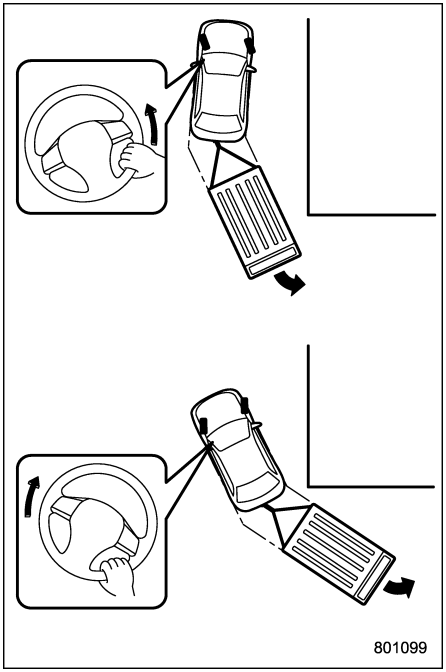

To reversing around a corner, perform the following procedure.

1. Start reversing slowly, steering the opposite way to the way you want to turn.
2. Once the trailer begins to swing round, start to straighten the steering wheel.
3. Straighten the steering of the vehicle and start to steer in the opposite direction in step 1.
4. Steer the vehicle around to be in line with the trailer, then straighten the steering again.

- If the ABS warning light illuminates while the vehicle is in motion, stop towing the trailer. We recommend that you have repairs performed immediately by your nearest SUBARU dealer.

▼ Driving on grades

- Before going down a steep hill, slow down and shift into lower gear (if necessary, use 1st gear) in order to utilize the engine braking effect and prevent overheating of your vehicle's brakes. Do not make sudden downshifts.
- When driving uphill in hot weather, the air conditioner may turn off automatically to protect the engine from overheating.
- When driving uphill in hot weather, pay attention to the engine coolant temperature gauge because the engine and transmission are relatively prone to overheating.
- If the engine coolant temperature gauge needle approaches the OVERHEAT zone. Refer to "Engine Coolant Temperature Gauge" ☞P177, immediately turn off the air conditioner and stop the vehicle in the nearest safe location. Refer to "If You Park Your Vehicle in an Emergency" ☞P428 and "Engine Overheating" ☞P443.
- Avoid using the accelerator pedal to stay stationary on an uphill slope instead of using the parking brake or foot brake. That may cause the transmission fluid to overheat.
- Place the select lever as follows.
  Uphill slopes: "D" position
  Downhill slopes: A low-speed gear position to use engine braking
- When the e-BOXER system overheat warning light illuminates, the power output limits are activated and it will only be possible to drive the vehicle at only low speeds. Refer to "e-BOXER System Overheat Warning Light" ☞P202

▼ Parking on a grade

⚠ CAUTION

The braking power of the electronic parking brake may not be sufficient when strong braking power is

needed (e.g., when parking on a steep slope while towing a trailer).

Always block the wheels under both vehicle and trailer when parking. Apply the parking brake firmly. You should not park on a hill or slope. If parking on a hill or slope cannot be avoided, you should take the following steps:

1. Apply the brakes and hold the pedal down.
2. Have someone place wheel blocks under both the vehicle and trailer wheels.
3. When the wheel blocks are in place, release the regular brakes slowly until the blocks absorb the load.
4. Apply the regular brakes and then apply the parking brake; slowly release the regular brakes.
5. Shift into the “P” position and shut off the e-BOXER system.

■ Vehicle Load Capacity

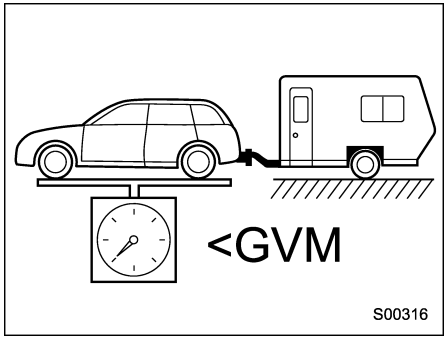

The load capacity of your vehicle is determined by weight, not by available cargo space. Total vehicle weight (the vehicle weight plus weight of all occupants, fuel and all cargo) must not exceed the Gross Vehicle Mass (GVM).

NOTE

If your vehicle is equipped with a SUBARU genuine accessory tow bar, you can find the tow bar information label, including MAX TOW CAPACITY and MAX DOWN LOAD information, on the right center pillar.

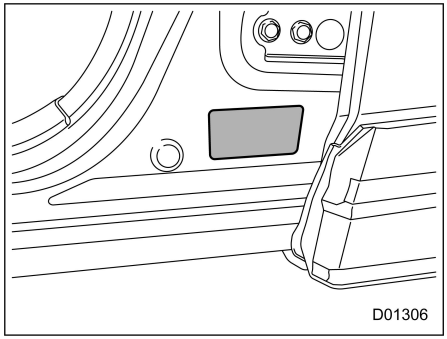

The GVM for your vehicle can be found on the built date label which is located on the left center pillar as shown in the illustration.

GVM is the maximum total weight of the vehicle including all options, fuel, driver and passengers, all cargo and including any accessory equipment such as a trailer hitch, roof rack or bike carrier (including luggage or equipment on these carriers) and the load of a trailer.

Tire inflation pressures must also be adjusted according to the load condition as listed on the tire information label located on the driver’s side center pillar. For adjusting tire pressures, refer to “Tire Pressures and Wear” ☞P493.

– CONTINUED –

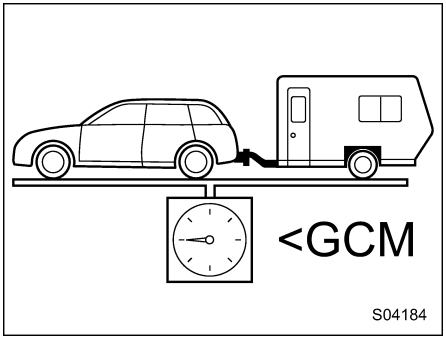

The Gross Combination Mass (GCM) for your vehicle can also be found on the built date label, which is located on the left center pillar. The GCM is the total permissible combined weight of the vehicle plus the trailer or caravan being towed. This is including all occupants, fuel and cargo. Do not exceed the GCM when loading mass and tow trailers or caravans.

■ Load Distribution

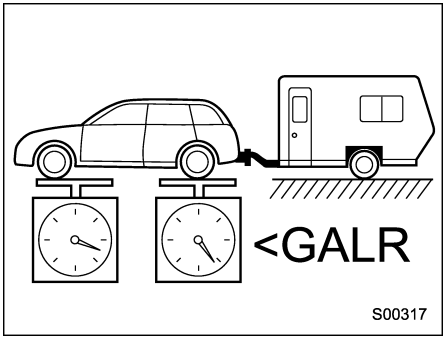

Distribution of the load in your vehicle is also important to ensure the proper balance and stability of the vehicle. In addition to not exceeding the GVM the load distribution on each axle (front or rear of vehicle) must not exceed the Gross Axle Laden Rating (GALR) for that axle. Front and rear axle loads can be adjusted by relocating luggage inside the vehicle.

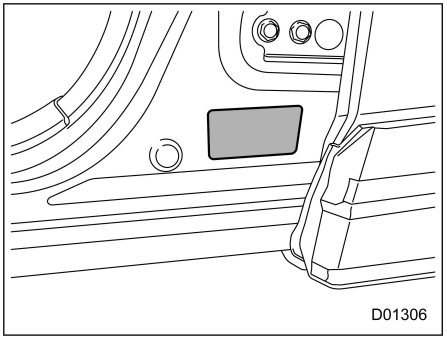

GALRs for your vehicle can also be found on the built date label which is located on the left center pillar as shown in the illustration.

If you carry heavy loads in the vehicle particularly if the vehicle is driven on rough bumpy or corrugated roads, you should confirm that the GVM and front and rear GALR's are within specification. This can be done by weighing the vehicle on a vehicle scale found at a commercial weighing station.

■ Additional Information for Europe

The following information represents the European statutory and regulatory requirements of EEC 2021/535 Annex XIII.

▼ **Maximum permissible vehicle weight (MPW) and maximum permissible rear axle weight (rear MPAW) for trailer towing**

⚠ WARNING

Never exceed the maximum towing weight.

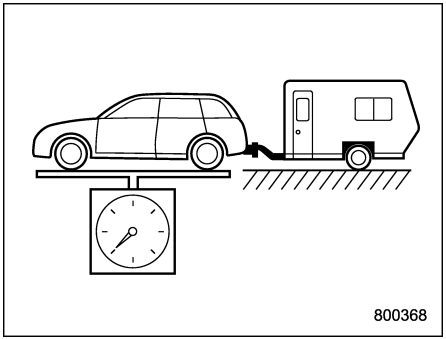

MPW

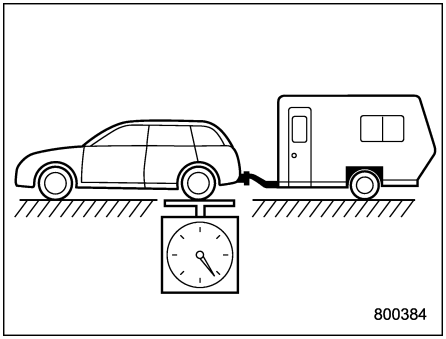

Rear MPAW

– CONTINUED –

MPW at towing (kg)	MPAW at towing (kg)
2,523	1,459

▼ **The technically permissible maximum mass at the coupling point (ball coupling load)**

120 kg

▼ **Mounting points of the coupling device**

The mounting points of the coupling on the towing vehicle are shown in the diagram.

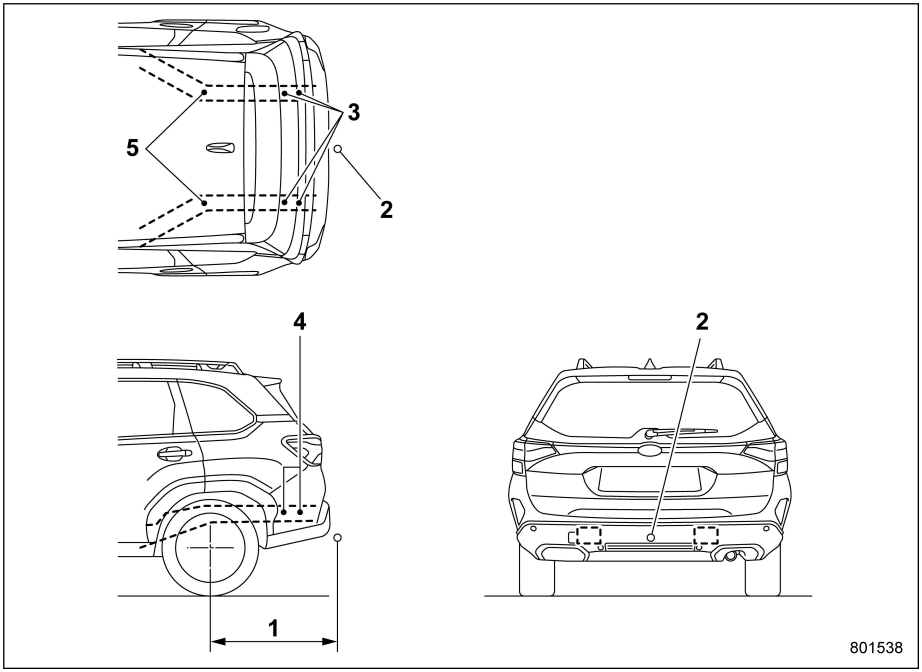

1 Maximum permissible rear overhang for the coupling point: 1,089 mm (43 in)
2 Coupling
3 Fixing points: Two places underneath the rear frame
4 Fixing points: Two places on the side of the rear frame for each side
5 Rear frame

9-1. If You Park Your Vehicle in an Emergency ... 428
9-2. Maintenance Tools ... 428
Under the Rear Floor ... 429
Under the Left Side Front Seat ... 429
9-3. Flat Tires ... 430
Sealing Flat Tire ... 430
Tire Pressure Monitoring System (TPMS) (If Equipped) ... 438
TPMS Screen (If Equipped) ... 439
9-4. Jump Starting ... 439
Battery Precautions! ... 439
Precautions When Jump Starting! ... 440
How to Jump Start ... 440
9-5. Engine Overheating ... 443
If Steam Is Coming from the Engine Compartment ... 443
If No Steam Is Coming from the Engine Compartment ... 443
9-6. Towing ... 444
Towing Hook and Tie-Down Hooks/Holes ... 445
Using a Flat-Bed Truck ... 448
9-7. Electronic Parking Brake – If the Electronic Parking Brake Cannot Be Released ... 448
9-8. Access Key Fob – If Access Key Fob Does Not Operate Properly ... 449
Locking and Unlocking ... 449
Switching Power Status ... 449
Starting the e-BOXER system ... 450
9-9. Rear Gate – If the Rear Gate Cannot Be Opened ... 450
9-10. Sunroof (If Equipped) – If the Sunroof Does Not Close ... 451
9-11. Malfunctions of the Center Information Display ... 452
9-12. If Your Vehicle Is Involved in an Accident ... 453
To Restart the e-BOXER System When Involved in an Accident ... 453
Automatic Door Locking/Unlocking Operation When Involved in an Accident ... 454
Post Collision Brake Control Function ... 454
9-13. If You Cannot Exit the Vehicle ... 455
If You Cannot Exit the Vehicle ... 455

9-1. If You Park Your Vehicle in an Emergency

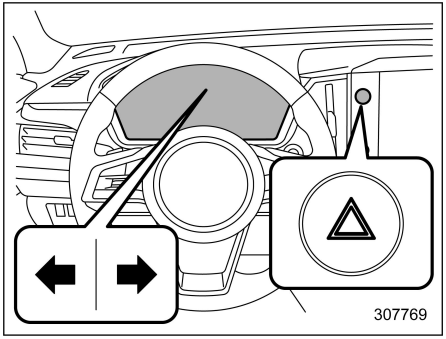

The hazard warning flasher should be used in day or night to warn other drivers when you have to park your vehicle under emergency conditions.

Avoid stopping on the road. It is best to safely pull off the road if a problem occurs.

The hazard warning flasher can be activated regardless of the ignition switch position.

Turn on the hazard warning by pressing the hazard warning flasher switch. Turn it off by pressing the switch again.

When the hazard warning flasher are flashing, the corresponding turn signal indicator will also flash.

NOTE

When the hazard warning flasher is on, the turn signals do not work.

9-2. Maintenance Tools

Your vehicle is equipped with the following maintenance tools.

- Jack*
- Jack handle
- Screwdriver
- Towing hook (eye bolt)
- Wheel nut wrench

*: The jack can be purchased at a SUBARU dealer.

■ Under the Rear Floor

The screwdriver and towing hook are stored as shown in the following illustrations.

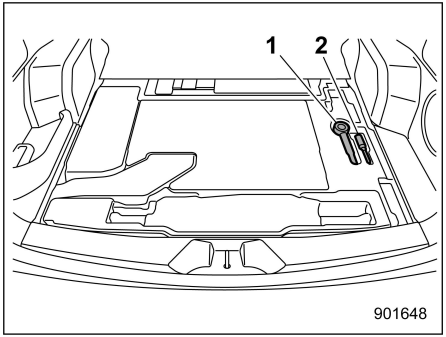

1 Towing hook (eye bolt)
2 Screwdriver

■ Under the Left Side Front Seat

Open the cover of the maintenance toolbox located under the left front seat and remove it from between the seat rails.

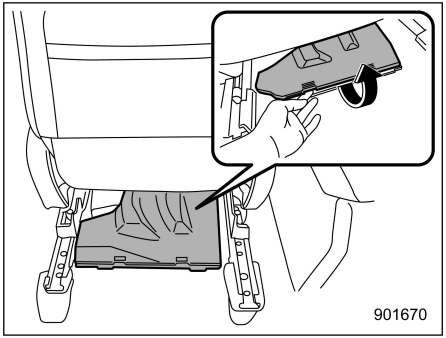

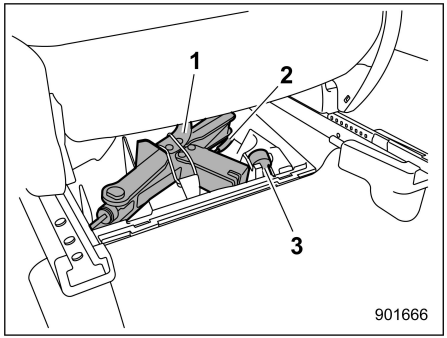

Under the left side front seat
1 Jack (dealer option)
2 Jack handle
3 Wheel nut wrench

Take out the jack, jack handle, and wheel nut wrench one at a time.

– CONTINUED –

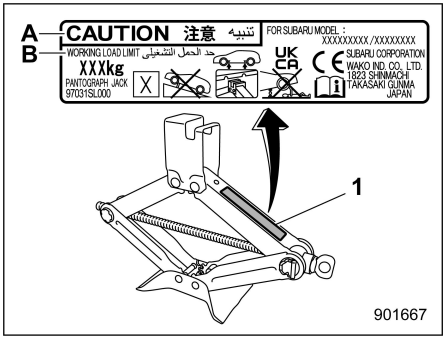

Example of jack label

1 Jack label
A CAUTION
B WORKING LOAD LIMIT

NOTE

For how to use the jack, refer to "Replacement procedure" ☞P497.

9-3. Flat Tires

If you have a flat tire while driving, never brake suddenly; keep driving straight ahead while gradually reducing speed. Then slowly pull off the road to a safe place.

■ Sealing Flat Tire

⚠ WARNING

Read these instructions and warnings carefully before sealing a flat tire.

Compliance with these instructions is vital to ensuring vehicle safety. Noncompliance with these instructions means risking tire damage, which can affect vehicle handling and lead to loss of vehicle control. This may result in serious injury or death.

Your vehicle is not equipped with a spare tire. If the tire is punctured, you can seal the flat tire temporarily by using the flat tire repair kit. You can seal a flat tire caused, for example, by nails or similar objects with less than 4 mm (0.2 in). However, depending on the type and extent of tire damage, some tires can only be partially sealed or not sealed at all, and this condition may cause a loss of tire pressure. A loss of tire pressure can affect vehicle handling, leading to the loss of vehicle control.

After sealing the flat tire temporarily, change the tires with new ones as soon as possible. We recommend that you have the sealed tire changed by your nearest SUBARU dealer. You may reuse the wheel if the attached sealant is wiped off, but the valve of the wheel must be replaced with a new one. If you reuse the wheel without replacing the valve, air may leak from the valve.

For tire replacement, refer to "Tire Replacement" ☞P496.

▼ Safety precautions when sealing flat tire

Observe the following rules when sealing a flat tire.

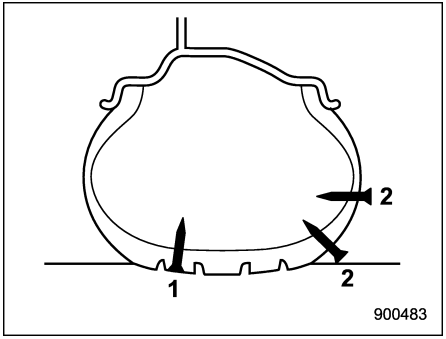

1 Sealing is possible
2 Sealing is not possible

⚠ WARNING

- **Do not use the flat tire repair kit in the following cases.**
  - **The tire has already been damaged as a result of being driven in the under inflated condition.**
  - **The tire damage is not located within the visible tread of the tire.**
  - **The tire damage is on the sidewall of the tire.**
  - **When the tire has been taken off of the wheel.**
  - **The wheel or the tire valve of the flat tire is damaged.**
  - **Two or more tires have been punctured.**
  - **The expiration date of the sealant has passed.**
  - **The tire is punctured by pointed items such as nails of 4 mm (0.2 in) or larger.**
- **When inflating the flat tire, if the tire inflation pressure does not reach the green zone of the pressure gauge within 10 minutes, do not continue to seal the tire. We recommend that you contact your SUBARU dealer.**
- **Drive with caution and avoid making sudden steering or driving maneuvers.**
- **Do not exceed a maximum speed of 80 km/h (50 mph).**
- **Do not exceed a maximum driving distance of 200 km (125 miles).**
- **Do not use tire chains on a sealed tire.**
- **Do not tow a trailer.**
- **If used for a purpose other than sealing a flat tire, the flat tire repair kit may cause a severe accident or injury due to the fact that compressed air can act as an explosive or propellant.**
- **Safely park your vehicle on the roadside so that you do not obstruct the flow of traffic and so that you are able to seal the flat tire without being in danger.**
- **Apply the parking brake, even if the vehicle is parked on a level road, to make sure that the vehicle will not move.**
- **Stop the e-BOXER system before sealing the flat tire.**
- **Turn on the hazard warning flasher while sealing the flat tire.**
- **Do not attempt to remove foreign objects like nails or screws that have penetrated the tire. Leave them as they are.**
- **Never leave the flat tire repair kit unattended while in use.**
- **Only one tire can be repaired with one bottle of sealant.**
- **The tires can be repaired when the ambient temperature is from**

– CONTINUED –

−40°C to 60°C (−40°F to 140°F).

CAUTION

- **Remember that the flat tire repair kit only provides temporary mobility. Regulations concerning tire repair after usage of flat tire repair kit may differ from country to country. We recommend that you consult your SUBARU dealer or tire dealer for advice.**
- **Store the flat tire repair kit safely and secure it in the cargo area. Storing it anywhere in the passenger compartment is not advisable because it could strike an occupant in the event of a sudden stop or collision and cause injury.**
- **Use the flat tire repair kit with original vehicle tires only.**
- **Do not keep the air compressor operating for more than 10 minutes, otherwise there is a risk of overheating.**
- **The temperature of the air compressor may become high. Be careful not to burn yourself.**
- **When raining, take measures to prevent the air compressor from being exposed directly to the rain. Exposing to rain may cause a malfunction.**
- **Do not use air compressors other than the one in the repair kit. Using an air compressor other than the one in the repair kit may damage the tires.**
- **Do not disassemble or modify the air compressor to enable the use of a power supply or a battery other than DC 12 V.**
- **If a temporary puncture repair is performed with the repair kit, the Tire Pressure Monitoring System (TPMS) may not operate normally.**

▼ Location of the flat tire repair kit

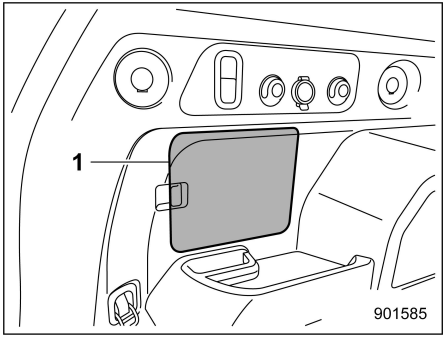

1 Flat tire repair kit

The flat tire repair kit is stored on the left side of the cargo area.

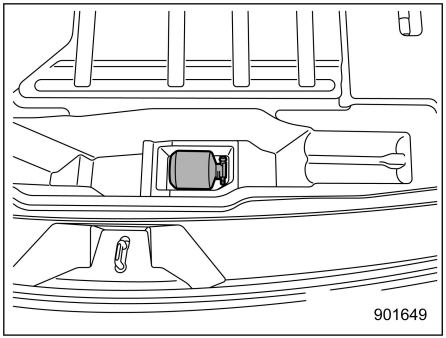

Sealant bottle

The sealant bottle is stored under the cargo area.

▼ **Contents of the flat tire repair kit**

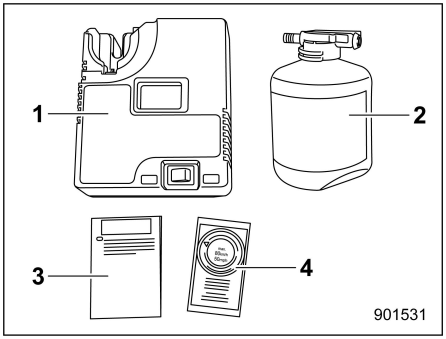

1 Air compressor
2 Sealant bottle
3 Quick reference guide
4 Speed limit label

With the exception of the sealant bottle, the contents the repair kit shown above are packed in a plastic bag. Return them to the plastic bag after use.

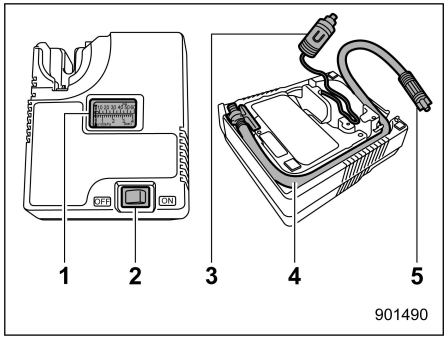

Air compressor
1 Air pressure gauge
2 Compressor switch
3 Power plug
4 Hose
5 Air release cap

⚠ WARNING

- **Do not drink the sealant. If the sealant is accidentally swallowed, seek medical attention immediately.**
- **If the sealant splashes onto your skin or eyes, wash it away immediately with plenty of water. If necessary, seek medical attention immediately.**
- **Keep the flat tire repair kit out of the reach of children.**
- **If a person who is allergic to natural rubber comes in contact the sealant, allergy symptoms may occur.**

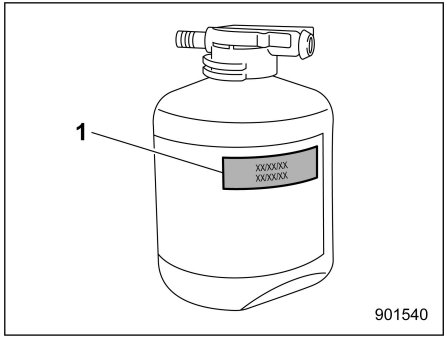

1 Expiration date

⚠ CAUTION

Replace the sealant bottle with a new one before the expiration date passes.

– CONTINUED –

▼ How to seal the flat tire

1. Take out the flat tire repair kit.

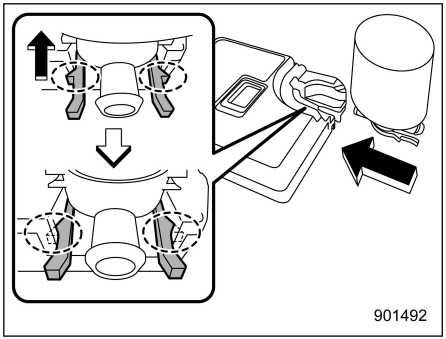

2. Attach the sealant bottle to the air compressor.

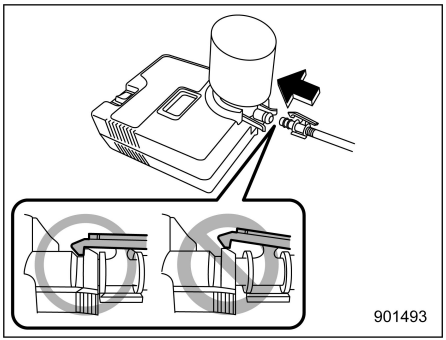

3. Connect the hose to the sealant bottle.

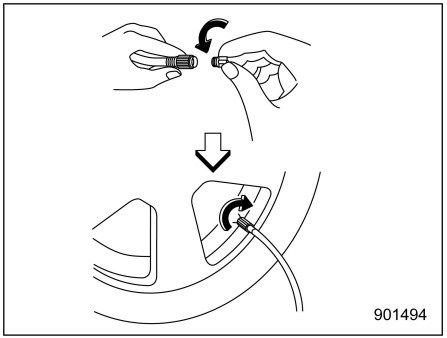

4. Remove the plug to connect the hose to the tire valve.

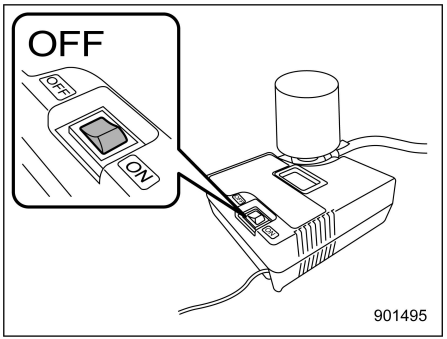

5. Make sure that the air compressor switch is in the OFF position.

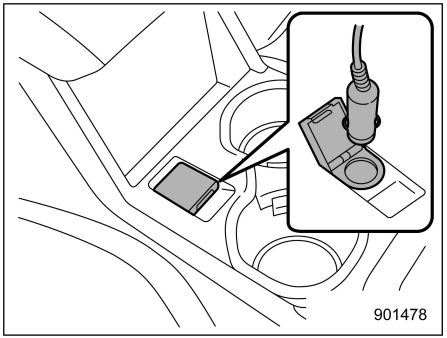

6. Connect the power cord of the air compressor to the accessory power outlet.

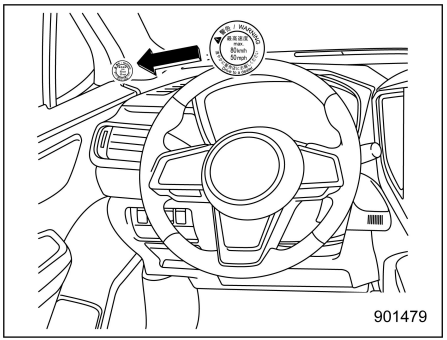

7. Fill the tire with air, and then attach the speed limit label in the position shown in the illustration.

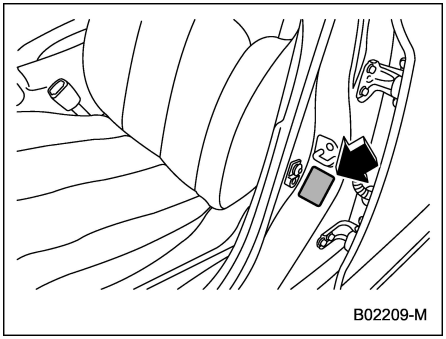

8. Check the specified tire inflation pressure.
9. Start the e-BOXER system.

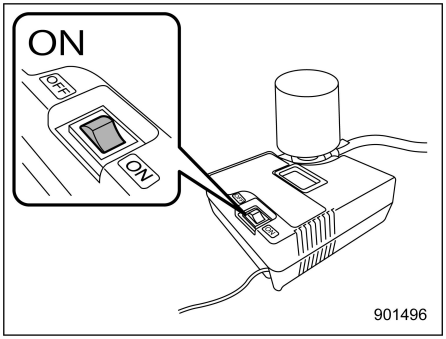

10. To inject the sealant and inflate the tire, turn the air compressor to the ON position.

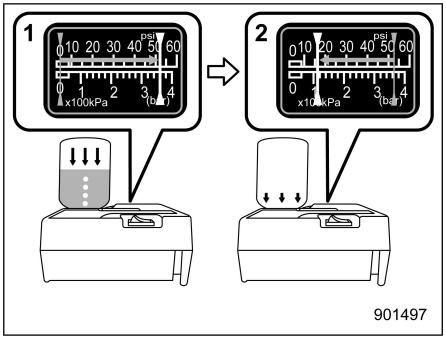

1 The sealant is now being injected.
2 The tire starts to inflate.

11. Inflate the tire until the recommended pressure is reached.

NOTE

- **The sealant will be injected and the pressure will spike to between 300 kPa (3.0 kgf/cm² or bar, 44 psi) and 400 kPa (4.0 kgf/cm² or bar, 58 psi), and then gradually equalize.**
- **The air pressure gauge will display the actual tire inflation pressure about 1 to 5 minutes after the switch is turned to the ON position.**
- **Turn the compressor switch to the OFF position and then check the tire inflation pressure. Be careful not to overinflate the tire as you check and repeat the inflation procedure until the specified tire inflation pressure is reached.**
- **The tire can be inflated for about 5 to 20 minutes (depending on the outside temperature). If the tire inflation pressure is still lower than the specified point after inflation for 25 minutes, the tire is too damaged to be repaired. Turn the compressor switch to the OFF position and contact an authorized SUBARU retailer or SUBARU authorized repairer, or any reliable repairer.**

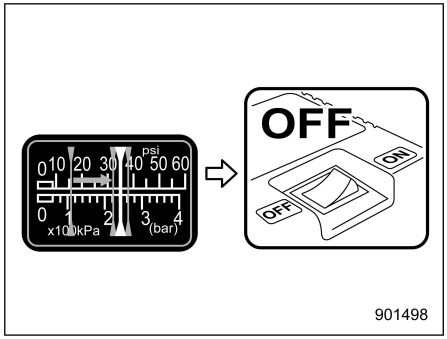

12. After inflating the tire to the specified air pressure, turn the air compressor switch to the OFF position.
13. With the compressor switch off, unplug the power plug from the power outlet

– CONTINUED –

socket and then disconnect the hose from the valve on the tire.

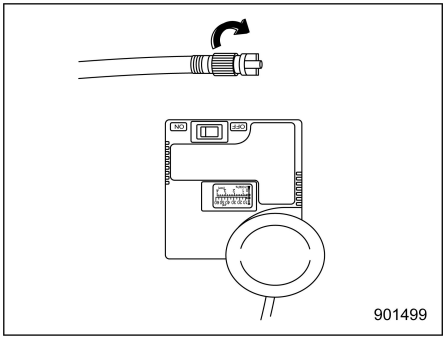

14. Disconnect the hose from the tire and place the plug on the tip of the hose.
15. Temporarily store the bottle in the luggage compartment while it is connected to the compressor.

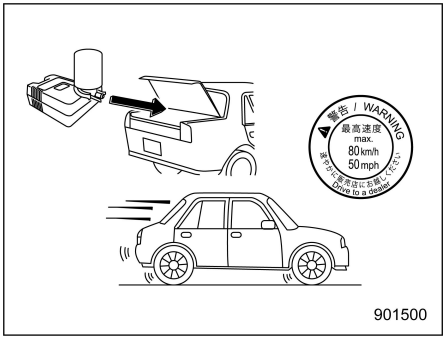

16. To spread the liquid sealant evenly within the tire, immediately drive the vehicle safely for about 5 km (3 miles) below 80 km/h (50 mph).
17. After driving, stop your vehicle in a safe place on a hard, flat surface and reconnect the flat tire repair kit.

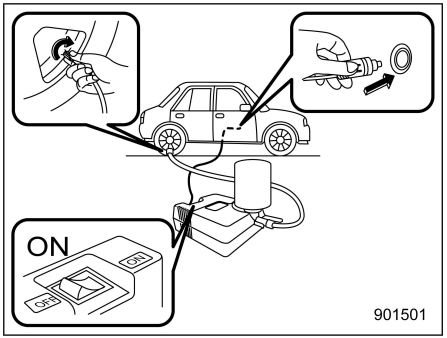

18. Turn the air compressor switch to the ON position to check tire pressure again.
    - **When the tire is inflated to the specified the air pressure**
      Return the flat tire repair kit to the original position and we recommend that you contact the nearest SUBARU dealer as soon as possible. Avoid sudden braking, sharp steering and sudden acceleration, and drive carefully. Also, if necessary, refill the tire with air to the appropriate air pressure.

- **When the air pressure is more than 130 kPa (1.3 kgf/cm² or bar, 19 psi)**
  Turn the compressor switch on to inflate the tire until the specified air pressure is reached. Drive for about 5 km (3 miles) and then perform step 17.
- **When the air pressure is less than 130 kPa (1.3 kgf/cm² or bar, 19 psi)**
  Stop driving and we recommend that you contact your SUBARU dealer for assistance.

WARNING

- **Drive carefully. Do not exceed 80 km/h (50 mph). Driving faster than that can result in the vehicle shaking.**
- **Do not use tire chains on a sealed tire.**
- **Do not tow a trailer.**
- **If heavy vibrations, unsteady steering behavior or noises occur while driving, reduce your speed and drive with caution to a location where it is safe for you to stop the vehicle. Recheck the tire and its pressure. If the tire pressure is in the red zone of the air gauge or if there are any cracks, bumps or similar tire damage visible, temporary repairs cannot be performed with the repair kit. We recommend that you consult with your SUBARU dealer or road service provider.**

CAUTION

- **Do not drive your vehicle with the sealed tire for more than 200 km (125 miles). Failure to replace the valve stem may result in air leakage at the valve stem.**
- **The sealant bottle and speed limit label need to be replaced after using the flat tire repair kit.**

NOTE

- **Connect the air compressor only to the tire valve.**
- **Before the tire is removed from the rim, inform your SUBARU dealer or other tire dealer that the tire contains sealant.**
- **New sealant and replacement parts can be purchased from your authorized repair shop or SUBARU dealer, and they should also be installed into the kit by a specialist. Empty sealant bottles and replacement parts must be returned to your SUBARU dealer or disposed of in compliance with local waste disposal regulations.**
- **Inform all other users of the vehicle that the tire has been temporarily sealed with the flat tire repair kit and make them aware of the special driving conditions to be observed.**

▼ Technical data of air compressor

Line voltage	DC 12 V
Operating voltage	DC 10 – 15 V
Amperage	Max. 10 A

– CONTINUED –

Tire Pressure Monitoring System (TPMS) (If Equipped)

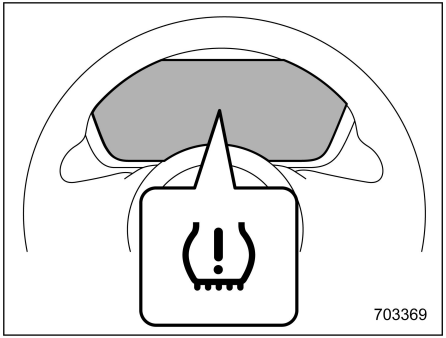

Low tire pressure warning light

The tire pressure monitoring system provides the driver with a warning message by sending a signal from a sensor that is installed in each wheel when a tire pressure is severely low relative to the selected TPMS mode.

The tire pressure monitoring system will activate only when the vehicle is driven at speeds above 40 km/h (25 mph). Also, this system may not react immediately to a sudden drop in tire pressure (for example, a blow-out caused by running over a sharp object).

WARNING

If the low tire pressure warning light illuminates while driving, never brake suddenly and keep driving straight ahead while gradually reducing speed. Then slowly pull off the road to a safe place. Otherwise an accident involving serious vehicle damage and serious personal injury could occur.

Check the pressure for all four tires and adjust the pressure according to the most appropriate one of three (normal, loading, or towing) COLD tire pressure values shown on the tire inflation pressure label located on the door pillar on the driver's side. If this light still illuminates while driving after adjusting the tire pressure, a tire may have significant damage and a fast leak that causes the tire to lose air rapidly. If you have a flat tire, refer to "Flat Tires" ☞P430.

When a replacement tire is mounted or a wheel rim is replaced without the original pressure sensor/transmitter being transferred, the low tire pressure warning light will illuminate steadily after blinking for approximately one minute. This indicates the TPMS is unable to monitor all four road wheels. We recommend that you contact your SUBARU dealer as soon as possible for tire and sensor replacement and/or system resetting.

When a tire is repaired with liquid sealant, the tire pressure warning valve and transmitter may not operate properly. If a liquid sealant is used, we recommend that you contact your nearest SUBARU dealer or other qualified service shop as soon as possible. Make sure to replace the tire pressure warning valve and transmitter when replacing the tire. You may reuse the wheel if there is no damage to it and if the sealant residue is properly cleaned off. If the light illuminates steadily after blinking for approximately one minute, we recommend that you promptly contact a SUBARU dealer to have the system inspected.

■ TPMS Screen (If Equipped)

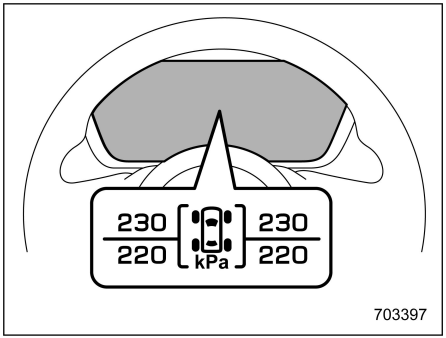

This screen displays each tire pressure. Refer to “Basic Screens” ☞P211.

9-4. Jump Starting

■ Battery Precautions!

⚠ WARNING

Read these instructions carefully:

To ensure safe and correct handling of your battery, read the following precautions carefully before using the battery or inspecting it.

Wear eye protection:

Always wear eye protection when working near your vehicle’s battery. Battery fluid contains sulfuric acid, so it can cause blindness if splashed into your eyes. Also, batteries emit highly flammable, explosive hydrogen gas. Eye protection is vital for protection in the event that this gas ignites.

Battery fluid contains sulfuric acid:

Since battery fluid contains sulfuric acid, be sure to wear eye protection and protective gloves when inspecting your vehicle’s battery. Avoid tipping the battery and subjecting it to shocks since this could cause fluid to spill.

Under no circumstances allow battery fluid to make contact with your skin, eyes, or clothing since this can cause blindness and burns. If battery fluid splashes onto your skin, eyes or clothing, wash it away immediately with plenty of water. If battery fluid splashes into your eyes, seek medical attention immediately.

If battery fluid is accidentally swallowed, immediately drink a large amount of milk or water, and seek medical attention immediately.

Battery fluid is corrosive. If it splashes onto your vehicle’s paintwork or fabrics, wash it away immediately with plenty of water.

Keep children away:

Batteries must be handled only by persons who are aware of the potential hazards. Take particular care to keep children away from your vehicle’s battery. Improper handling

– CONTINUED –

can cause blindness and burns.

Keep flames away:

Before working on or near your vehicle's battery, extinguish all cigarettes, matches, and lighters. Also, keep the battery away from flammable items and electrical sparks. Since batteries emit highly flammable, explosive hydrogen gas, any flames or sparks in the vicinity could cause an explosion.

When working near your vehicle's battery, take care that metal tools do not short-circuit the battery's (+) and (−) terminals or connect the battery's (+) terminal to the vehicle's body. A short circuit could create electrical sparks and lead to an explosion.

To prevent electrical sparks, all rings, wristwatches, and other metal accessories must be taken off before work is carried out on or near the battery.

Prevent explosions:

While being charged, batteries emit highly flammable, explosive hydrogen gas. To prevent an explosion, charge your 12 V battery in a well ventilated area and keep flames away.

■ Precautions When Jump Starting!

WARNING

- **Never attempt jump starting if the discharged battery is frozen. It could cause the battery to burst or explode.**
- **Be sure the jumper cables and clamps on them do not have loose or missing insulation.**

  Do not jump start unless cables in suitable condition are available.
- **A running e-BOXER system can be dangerous. Keep your fingers, hands, clothing, hair and tools away from the cooling fan, the drive belt and any other moving engine parts. Removing rings, watches and ties is advisable.**
- **Jump starting is dangerous if it done incorrectly. If you are unsure about the proper procedure for jump starting, consult a competent mechanic.**

CAUTION

The battery used for boosting must be 12 V. Do not jump start unless you are sure that the booster battery is correct.

When your vehicle does not start due to a run down (discharged) battery, the vehicle may be jump started by connecting your battery to another battery (called the booster battery) with jumper cables.

■ How to Jump Start

WARNING

Observe the following precautions. Otherwise, any flames or sparks in the vicinity could cause an explosion since batteries emit highly flammable, explosive hydrogen gas. Also, electric components or the e-BOXER system may be damaged.

- **Be careful not to mistake the positive (+) terminal and the negative (−) terminal.**

- **When connecting the jumper cable, do not let the positive (+) terminal and the negative (−) terminal come in contact.**

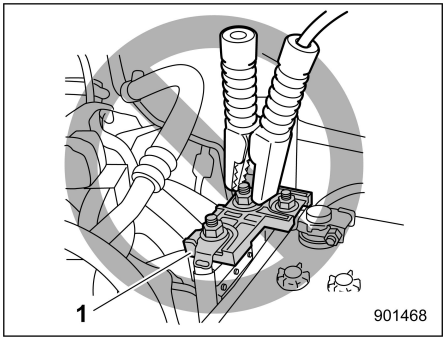

1 Fuse

WARNING

Never connect the jumper cables to a fuse near the terminal of the 12 V battery. Doing so may ignite gases generated by the 12 V battery and result in an explosion, which could damage the electronic devices and the engine.

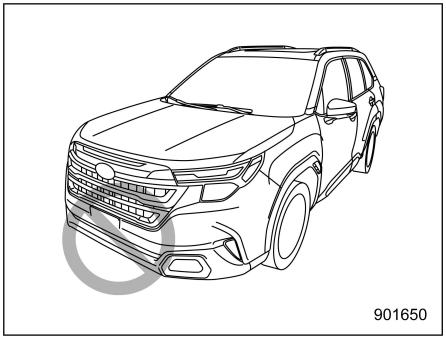

CAUTION

When replacing the battery or jump-starting, do not touch the area around the front bumper. Also, do not put tools or cloths in this area. If any function of the cooling system operates, it may lead to an injury or a failure of the cooling system.

– CONTINUED –

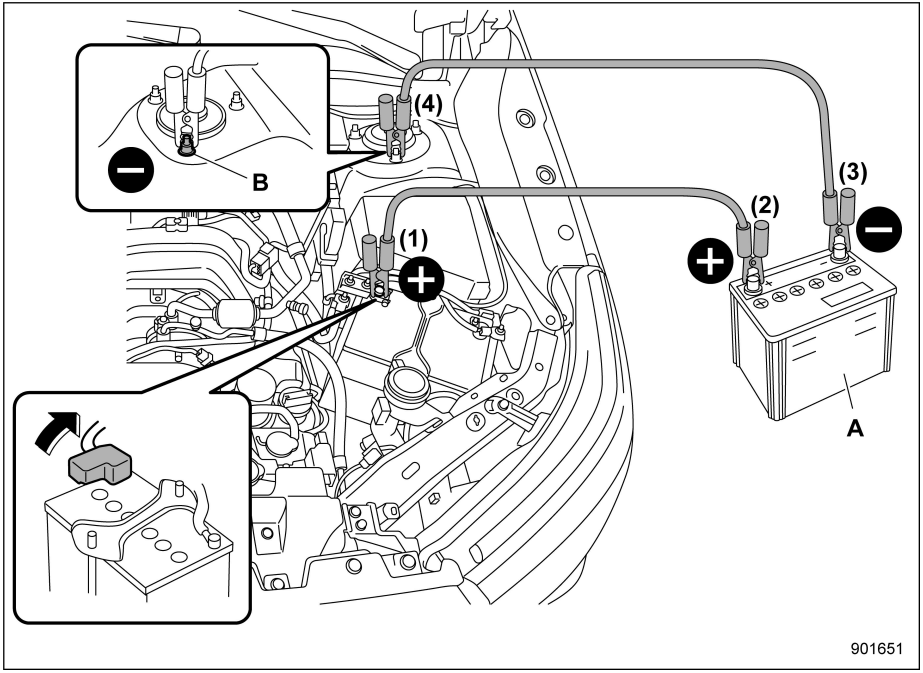

A Booster battery
B Strut mounting nut

1. Make sure the booster battery is 12 volts and the negative (−) terminal is grounded.
2. If the booster battery is in another vehicle, do not let the two vehicles touch.
3. Turn off all unnecessary lights and accessories.
4. Connect the jumper cables exactly in the sequence illustrated.
   (1) Connect one jumper cable to the positive (+) terminal on the discharged battery.
   (2) Connect the other end of the jumper cable to the positive (+) terminal of the booster battery.
   (3) Connect one end of the other cable to the negative (−) terminal of the booster battery.
   (4) Connect the other end of the cable to the strut mounting nut.

   Make sure that the cables are not near any moving parts and that the cable clamps are not in contact with any other metal.
5. Start the engine of the vehicle with the booster battery and run it at moderate speed. Then start the e-BOXER system of the vehicle that has the discharged battery.

6. Make sure that the e-BOXER system READY indicator light is illuminated.
7. When finished, carefully disconnect the cables in exactly the reverse order.

NOTE

If the e-BOXER system does not start, we recommend that you contact your SUBARU dealer.

9-5. Engine Overheating

WARNING

Never remove the radiator cap until the engine has been shut off and has fully cooled down. When the engine is hot, the coolant is under pressure. Removing the cap while the engine is still hot could release a spray of boiling hot coolant, which could burn you very seriously.

CAUTION

If the engine overheats, the engine speed or the vehicle speed may be reduced. Stop the vehicle in a safe place immediately.

■ If Steam Is Coming from the Engine Compartment

Turn off the engine and get everyone away from the vehicle until it cools down.

■ If No Steam Is Coming from the Engine Compartment

NOTE

For details about how to check the coolant level or how to add coolant, refer to "Engine Coolant" ☞P482.

1. Keep the engine running at idling speed.
2. Open the hood to ventilate the engine compartment. Refer to "Engine Hood" ☞P475.
3. Confirm that the cooling fan is turning. If the fan is not turning, immediately turn off the engine and we recommend that you contact your authorized dealer for repair.
4. After the engine coolant temperature has dropped, turn off the engine.
   If the temperature gauge stays in the overheated zone, turn off the engine.
5. After the engine has fully cooled down, check the coolant level in the reserve tank.
   If the coolant level is below the "LOW" mark, add coolant up to the "FULL" mark.
6. If there is no coolant in the reserve tank, add coolant to the reserve tank. Then remove the radiator cap and fill the radiator with coolant.

– CONTINUED –

If you remove the radiator cap from a hot radiator, first wrap a thick cloth around the radiator cap, then turn the cap counter-clockwise slowly without pressing down until it stops. Release the pressure from the radiator. After the pressure has been fully released, remove the cap by pressing down and turning it.

9-6. Towing

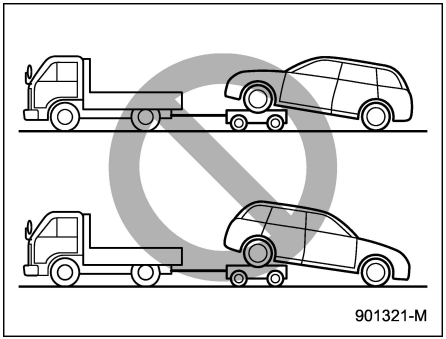

WARNING

Never tow AWD models with the front wheels raised off the ground while the rear wheels are on the ground, or with the rear wheels raised off the ground while the front wheels are on the ground. This will cause the vehicle to spin away due to the operation or deterioration of the center differential.

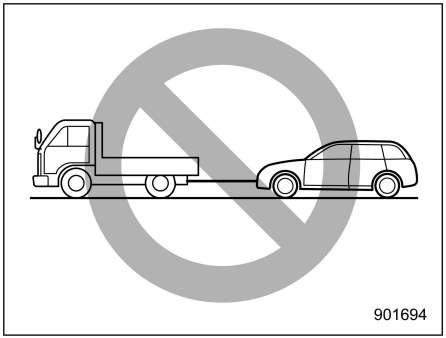

WARNING

Avoid towing the vehicle with all four wheels on the ground. Doing so will damage the drivetrain and potentially harm the electric motor. This damage might lead to malfunctions that could result in a fire.

If towing is necessary, it is best done by your SUBARU dealer or a commercial towing service.

Towing Hook and Tie-Down Hooks/Holes

The towing hooks should be used only in an emergency.

SUBARU recommends towing be done by your SUBARU dealer or a commercial towing service.

CAUTION

- **Use only the specified towing hook and tie-down hooks/holes. Never use suspension parts or other parts of the body for towing or tie-down purposes.**
- **Never use the tie-down hole closest to the muffler under the vehicle for towing purposes.**

Front towing hook:

1. Take out the screwdriver, towing hook, wheel nut wrench and jack handle from the under-floor storage and the compartment under the left side front seat.

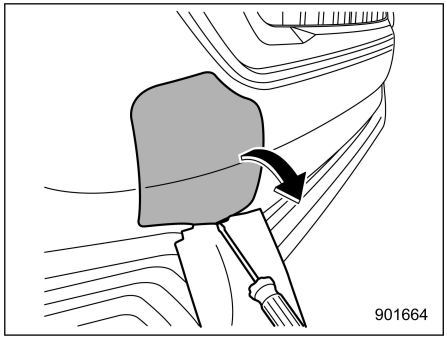

2. Cover the tip of a flat-head screwdriver with vinyl tape or cloth so that it will not scratch the bumper. Insert the flat-head screwdriver into the cutout of the cover and pry open the cover.

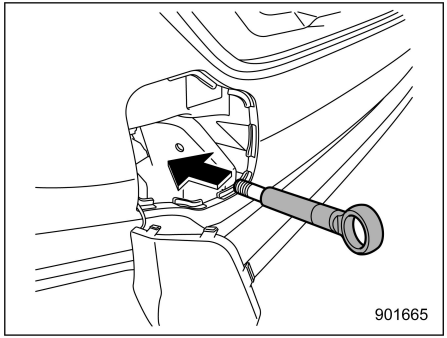

3. Screw the towing hook into the threaded hole until the threads can no longer be seen.

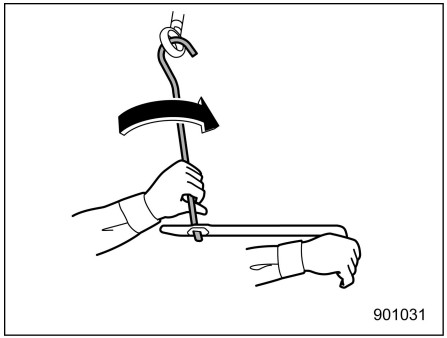

4. Tighten the towing hook securely using the jack handle and wheel nut wrench.

After towing, remove the towing hook from the vehicle and stow it in the under-floor storage compartment.

Fit the towing hook cover on the bumper.

WARNING

- **Do not use the towing hook for purposes other than towing your vehicle.**
- **Be sure to remove the towing hook after towing. Leaving the towing hook mounted on the vehicle could interfere with prop-**

– CONTINUED –

er operation of the SRS airbag system in a frontal collision.

⚠ CAUTION

To prevent deformation to the bumper and the towing hook, do not apply an excessive load to the towing hook.

Rear towing hook:

1. Take out the screwdriver, towing hook, wheel nut wrench and jack handle from the under-floor storage and the compartment under the left side front seat.

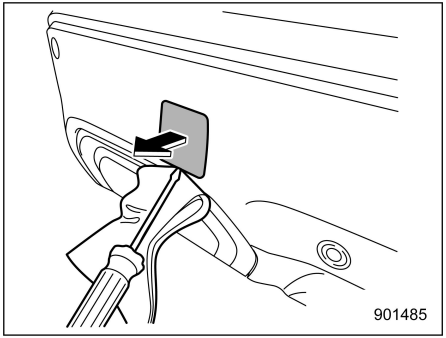

2. Cover the tip of a flat-head screwdriver with vinyl tape or cloth so that it will not scratch the bumper. Insert the flat-head screwdriver into the cutout of the cover and pry open the cover.

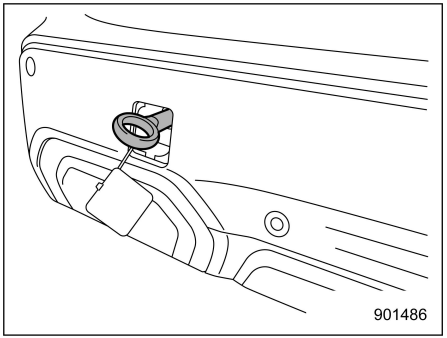

3. Screw the towing hook into the threaded hole until its thread can no longer be seen.

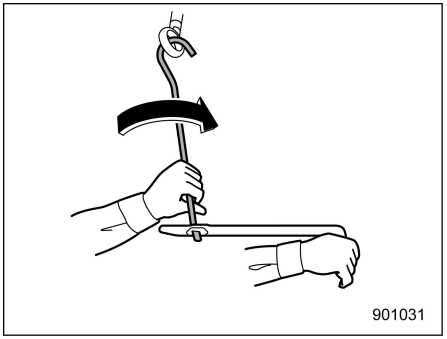

4. Tighten the towing hook securely using the jack handle and wheel nut wrench.

After towing, remove the towing hook from the vehicle and stow it in the under-floor storage compartment.

Fit the towing hook cover on the bumper.

WARNING

- **Do not use the towing hook for purposes other than towing your vehicle.**
- **Be sure to remove the towing hook after towing. Leaving the towing hook mounted on the vehicle could interfere with proper operation of the fuel pump shut off function when the vehicle is struck from behind.**

CAUTION

- **To prevent deformation to the bumper and the towing hook, do not apply an excessive load to the towing hook.**
- **For models equipped with the SRVD, when towing another vehicle, touch "Rear Vehicle Detection (SRVD)" to deactivate the system. The system may not operate properly due to the blocked radar waves. For details about how to turn on/off the SRVD, refer to "Car settings" ☞P229.**

Front tie-down hooks:

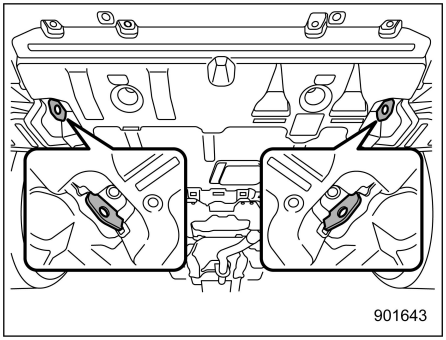

The front tie-down hooks are located between each of the front tires and the front bumper.

Front Tie-down Hooks are for tying down the vehicle. They are not for towing.

Rear tie-down holes:

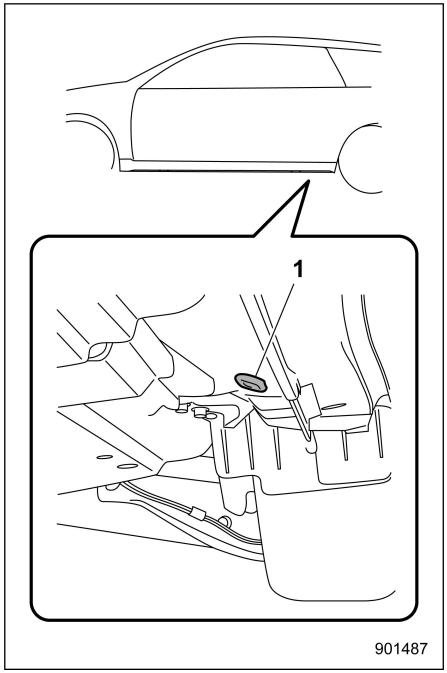

1 Rear tie-down hole

The rear tie-down holes are located near each of the jack-up reinforcements.

There is a plug in each rear tie-down hole. To use the rear tie-down holes, remove the

– CONTINUED –

plugs. After using the rear tie-down holes, return the plugs to their original places.

WARNING

Use the rear tie-down holes only for downward anchoring. If they are used to anchor the vehicle in any other direction, cables may slip out of the holes, possibly causing a dangerous situation.

■ Using a Flat-Bed Truck

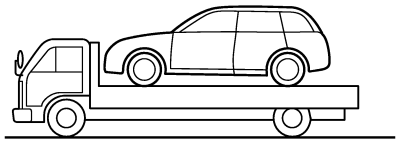

901322-M

This is the best way to transport your vehicle. Use the following procedures to ensure safe transportation.

1. Shift the select lever into the “P” position.
2. Apply the parking brake firmly.
3. Secure the vehicle onto the carrier properly with safety chains. Each safety chain should be equally tightened and care must be taken not to pull the chains so tightly that the suspension bottoms out.

CAUTION

Transport by flat-bed truck may cause the headlights to become misaligned. In such a case, we recommend that you have the headlight alignment checked by a SUBARU dealer after transporting the vehicle by flat-bed truck.

9-7. Electronic Parking Brake – If the Electronic Parking Brake Cannot Be Released

We recommend that you contact your SUBARU dealer and we recommend that you have your SUBARU dealer release the electronic parking brake.

9-8. Access Key Fob – If Access Key Fob Does Not Operate Properly

CAUTION

Keep metallic objects, magnetic sources and signal transmitters away from the area between the access key fob and the push-button ignition switch. They may interfere with the communication between the access key fob and the push-button ignition switch.

The following functions may be inoperable because of strong radio signals in the surrounding area or a low battery condition of the access key fob.

- Locking/unlocking all the doors including rear gate
- Switching power status
- Starting the e-BOXER system

In such cases, perform the following procedure. When the battery of the access key fob is discharged, replace it with a new one. Refer to “Replacing Battery of Access Key Fob” ☞P514.

■ Locking and Unlocking

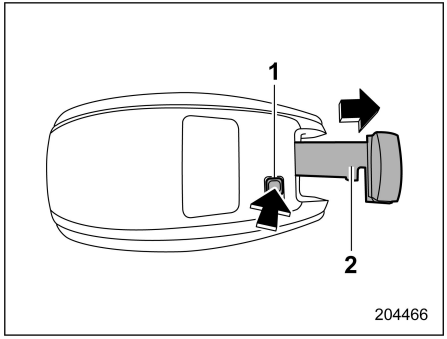

1 Release button
2 Emergency key

While pressing the release button of the access key fob, take out the emergency key.

Lock or unlock the driver’s door with the emergency key in the procedure described in “Locking and Unlocking from the Outside” ☞P146.

NOTE

After locking or unlocking, be sure to attach the emergency key back to the access key fob.

■ Switching Power Status

1. Apply the parking brake.
2. Place the select lever in the “P” position.
3. Depress the brake pedal.

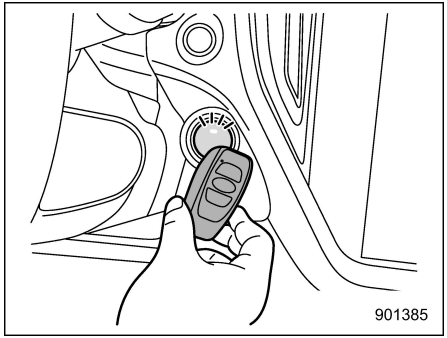

4. Hold the access key fob with the buttons facing you, and touch the push-button ignition switch with it.
   When the communication between the access key fob and the vehicle is completed, a chime (ding) will sound. At the same time, the status of the push-button ignition switch changes to either of the following.
   - When the keyless access with push-button start system is deactivated: “ACC”
   - Under other conditions: “ON”

– CONTINUED –

5. When the keyless access with push-button start system is deactivated, press the push-button ignition switch with the brake pedal released. The status of the push-button ignition switch then changes to “ON”.

NOTE

If the power does not switch even though the above procedure was followed precisely, we recommend that you contact your SUBARU dealer.

■ Starting the e-BOXER system

1. Apply the parking brake.
2. Place the select lever in the “P” position.
3. Depress the brake pedal.

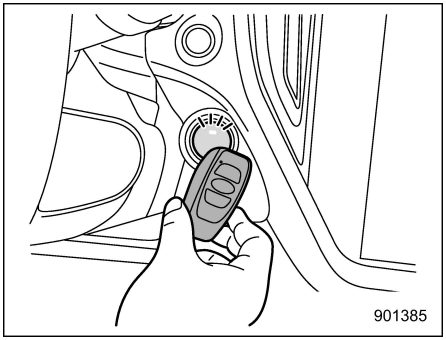

4. Hold the access key fob with the buttons facing you, and touch the push-button ignition switch with it.
   When the communication between the access key fob and the vehicle is completed, a chime (ding) will sound. At the same time, the push-button ignition switch turns to the “ACC” or “ON” position.
5. After the push-button ignition switch turns to the “ACC” or “ON” position, while depressing the brake pedal, press the push-button ignition switch.

NOTE

If the e-BOXER system does not start even though the above procedure was followed precisely, we recommend that you contact your SUBARU dealer.

9-9. Rear Gate – If the Rear Gate Cannot Be Opened

In the event that you cannot open the rear gate by pressing the rear gate opener button, you can open it from inside the cargo area.

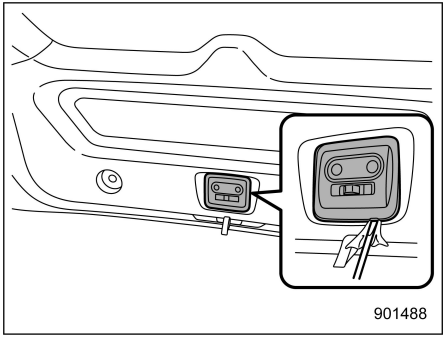

1. Cover the tip of a flat-head screwdriver with vinyl tape or cloth so that it will not scratch. Remove the access cover at the bottom-center of the rear gate trim using flat-head screwdriver.

CAUTION

Never operate the rear gate lock release lever with your fingers because doing so may cause an injury. Always use a flat-head screwdriver or a similar tool.

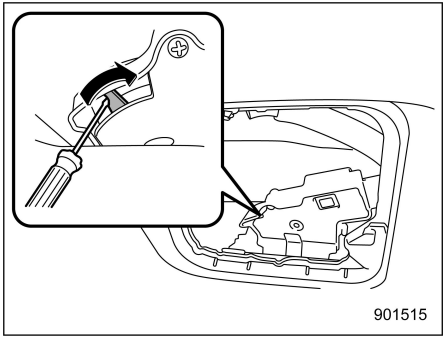

Models without power rear gate

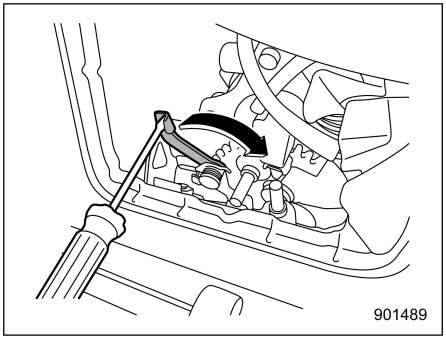

Models with power rear gate

2. Turn the rear gate lock release lever to the right position. Then the rear gate will open.

9-10. Sunroof (If Equipped) – If the Sunroof Does Not Close

If the sunroof does not close, we recommend that you have the system checked by a SUBARU dealer.

9-11. Malfunctions of the Center Information Display

If the following screens are displayed, temporary errors or malfunctions may occur in the center information display.

If they are only temporary errors, the following procedure may help to eliminate them.

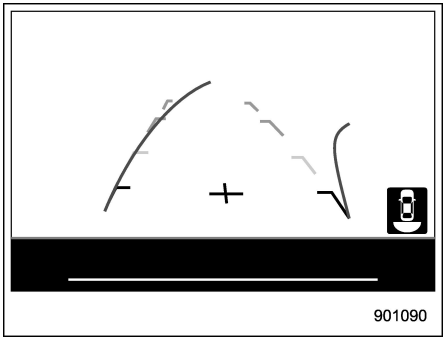

Shutting down the screen

Freezing the screen

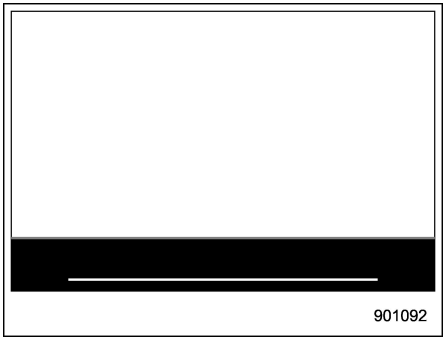

Blacking out or turning the screen blue

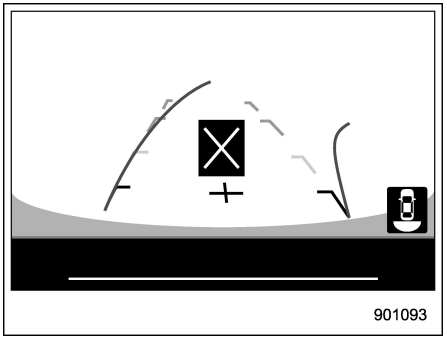

Error A

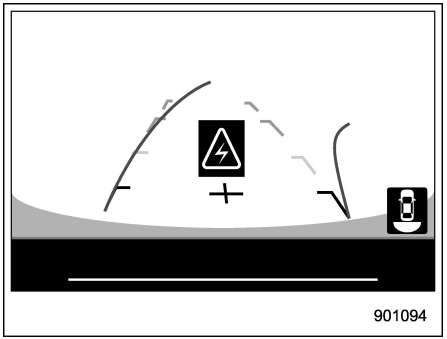

Error B

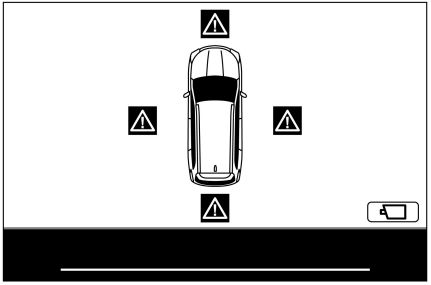

Error C

1. Park the vehicle in a safe place.
2. Turn the ignition switch once to the "OFF" position, then start the e-BOXER system.

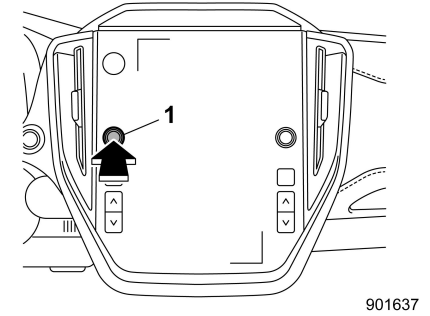

1 Volume knob

3. If the center information display cannot be recovered even though the engine has been restarted, press and hold the volume knob for more than 10 seconds. The center information display will start up again.
4. If the center information display is not recovered by restarting it, we recommend that you contact your SUBARU dealer.

9-12. If Your Vehicle Is Involved in an Accident

■ To Restart the e-BOXER System When Involved in an Accident

CAUTION

If your vehicle is involved in an accident, be sure to inspect the ground under the vehicle before restarting the e-BOXER system. If you find that fuel has leaked on the ground, do not try to restart the e-BOXER system. The fuel system has been damaged and is in need of repair. Immediately contact the nearest automotive service facility. We recommend that you consult your SUBARU dealer.

Your vehicle has a fuel pump shut off system. When the vehicle sustains an impact in an accident, etc., the fuel pump shut off system stops supplying the fuel in order to minimize fuel leakage. However, depending on the impact conditions at the time of collision, the fuel pump shut-off system may not operate.

– CONTINUED –

Perform the following procedures to restart the e-BOXER system after the system is activated.

1. Turn the push-button ignition switch to the “ACC” or “OFF” position.
2. Restart the e-BOXER system.

Automatic Door Locking/Unlocking Operation When Involved in an Accident

When the automatic door locking/unlocking function is ON, all the doors will be locked automatically while driving. For further details, refer to “Automatic Door Locking/Unlocking” ☞P148.

When the vehicle sustains a strong impact which may trigger the airbags to deploy, the door locks may be unlocked automatically to enable emergency escape. Generally, an impact sustained from a rear end collision does not trigger the airbags to deploy. However if the impact is strong enough to deploy the airbags, it can also trigger the unlocking function.

Under such circumstance, the automatic door locking/unlocking function will be suspended and the doors will remain unlocked.

Confirm the safety of the surroundings first and carry out the following to retrieve the automatic door locking/unlocking function.

1. Turn the push-button ignition switch to the “OFF” position.
2. Turn the push-button ignition switch to the “ON” position.

NOTE

Depending on the severity of the impact, the emergency unlocking may not function.

CAUTION

If the following occur, there may be a malfunction in the system.

We recommend that you have the system inspected by a SUBARU dealer.

- **The doors unlock automatically while driving.**
- **With all doors shut, the doors unlock when pressing the lock side of the power door locking switch.**
- **The automatic door locking/unlocking function does not operate.**

Post Collision Brake Control Function

To prevent or reduce secondary damage in the event of a collision, when the vehicle detects a collision while traveling at 12 km/h (7 mph) or more, the Post Collision Brake Control function automatically brakes.

CAUTION

- **The Post Collision Brake Control function is a function that supports braking just after a collision. After a collision, be sure to apply the brakes and stop the vehicle immediately in a safe place.**
- **When the vehicle is stopped by the automatic braking of the Post Collision Brake Control function, the automatic braking is released immediately after the vehicle stops. To keep the vehicle stopped, depress the brake pedal immediately.**
- **Depending on the circumstances of the accident, such as the road conditions, the extent of damage to the vehicle, or other factors, even if the automatic braking of the Post Collision Brake Control**

function decelerates the vehicle, it may not be able to bring the vehicle to a complete stop.

NOTE

- **If you depress the accelerator pedal while the automatic braking is operating, the Post Collision Brake Control function turns off and the automatic braking will stop.**
- **The Post Collision Brake Control function will not operate when the function is damaged due to a collision.**

9-13. If You Cannot Exit the Vehicle

■ If You Cannot Exit the Vehicle

Use the window breaking tool (if equipped) that is stored in the glove box in a plastic bag.

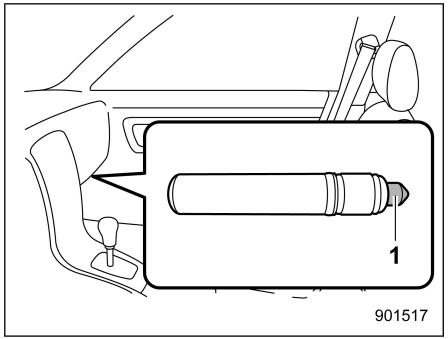

Window breaking tool
1 Glass breaking portion

If the side door or side window does not operate because the vehicle is submerged in water etc. and you cannot exit the vehicle, use the window breaking tool to break the side window and escape from the vehicle.

NOTE

The windshield is made of laminated glass and cannot be broken using window breaking tools.

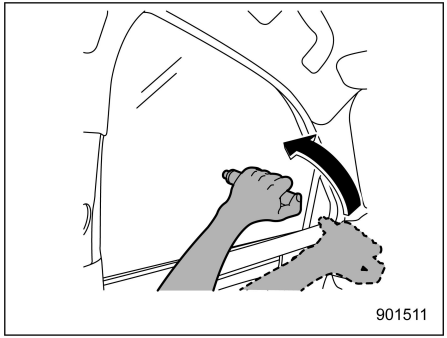

Hold the window breaking tool as shown in the illustration and break the side window.

Appearance Care

10-1. Exterior Care 458
Washing 458
Waxing and Polishing 459
Cleaning Alloy Wheels 460
10-2. Corrosion Protection 460
Most Common Causes of Corrosion..... 460
To Help Prevent Corrosion 461
10-3. Cleaning the Interior 461
Seat Fabric Material 461
Leather Seat Materials..... 462
Synthetic Leather Upholstery 462
Seatbelt 462
Instrument Panel, Console Panel, Switches, Combination Meter, and Other Plastic Surface 462
Center Information Display 463
Cleaning the High Voltage Battery Air Intake..... 463

10-1. Exterior Care

■ Washing

⚠ CAUTION

- **When washing the vehicle, the brakes may get wet. As a result, the brake stopping distance will be longer. To dry the brakes, drive the vehicle at a safe speed while lightly pressing the brake pedal to heat up the brakes.**
- **Do not wash the engine compartment and areas adjacent to it. If water enters the engine air intake or electrical parts, it will cause e-BOXER system trouble or a malfunction of the power steering.**
- **When washing inner fenders, underbody, bumpers and protruding objects such as exhaust pipes and exhaust finishers, be careful to prevent injuries from contacting sharp ends.**
- **Do not use any organic solvents when washing the surface of the bulb assembly cover. However, if a detergent with organic solvents is used to wash the cover surface, completely rinse off the detergent with water. Otherwise, the cover surface may be damaged.**
- **When washing the vehicle, turn off the wiper. If the wiper switch is in the "AUTO" position, the wipers may operate unexpectedly while washing the vehicle and cause injury.**
- **Since your vehicle is equipped with a rear wiper, automatic carwash brushes could become tangled around it, damaging the wiper arm and other components. Ask the automatic carwash operator not to let the brushes touch the wiper arm or to fix the wiper arm on the rear window glass with adhesive tape before operating the machine.**
- **If the climate control system is operating when you wash the vehicle, do not set the air inlet selection of the climate control to outside air circulation mode. There is a risk that water may enter the vehicle through the air inlets.**

NOTE

- **When having your vehicle washed in an automatic car wash, make sure beforehand that the car wash is of suitable type.**
- **When washing a vehicle equipped with automatic rain sensing windshield wipers, make sure that the wiper is turned off. If the wiper switch is in the "AUTO" position, the wipers may operate unexpectedly while washing the vehicle and the wiper blades could be damaged.**
- **The rear view camera lens has a hard coating to help prevent scratches. However, when washing the vehicle or cleaning the camera lens, be careful not to scratch the camera lens. Do not use a washing brush directly on the camera lens. The image quality of the rear view camera may deteriorate.**

The best way to preserve your vehicle's beauty is frequent washing. Wash the vehicle at least once a month to avoid contamination by road grime.

Wash dirt off with a wet sponge and plenty of lukewarm or cold water. Do not wash the vehicle with hot water and in direct sunlight.

Salt, chemicals, insects, tar, soot, tree sap,

and bird droppings should be washed off by using a light detergent, as required. If you use a light detergent, make certain that it is a neutral detergent. Do not use strong soap or chemical detergents. All cleaning agents should be promptly flushed from the surface and not allowed to dry there. Rinse the vehicle thoroughly with plenty of lukewarm water. Wipe the remaining water off with a chamois or soft cloth. Wear rubber gloves and use a hand brush when washing down underbody, inner fenders and suspension to effectively remove mud and dirt off.

▼ Washing the underbody

Chemicals, salts and gravel used for deicing road surfaces are extremely corrosive, accelerating the corrosion of underbody components, such as the exhaust system, fuel and brake lines, brake cables, floor pan and fenders, and suspension.

Thoroughly flush the underbody and inside of the fenders with lukewarm or cold water at frequent intervals to reduce the harmful effects of such agents.

Mud and sand adhering to the underbody components may accelerate their corrosion.

After driving off-road or on muddy or sandy roads, wash the mud and sand off the underbody.

Carefully flush the suspension and axle parts, as they are particularly prone to mud and sand buildup. Do not use a sharp-edged tool to remove caked mud.

⚠ CAUTION

- **Be careful not to damage brake hoses, sensor harnesses, and other parts when washing suspension components.**
- **Be careful not to flush the engine bottom for a long time. It may cause damage of some electrical parts.**

▼ Using a warm water washer

- Keep a good distance of 30 cm (12 in) or more between the washer nozzle and the vehicle.
- Do not wash the same area continuously.
- If a stain will not come out easily, wash by hand. Some warm water washers are of the high temperature, high pressure type, and they can damage or deform the resin parts such as mouldings, or cause water to leak into the vehicle.

■ Waxing and Polishing

Always wash and dry the vehicle before waxing and polishing.

Use a good quality polish and wax and apply them according to the manufacturer's instructions. Wax or polish when the painted surface is cool.

Be sure to polish and wax the chrome trim, as well as the painted surfaces. Loss of wax on a painted surface leads to loss of the original luster and also quickens the deterioration of the surface. It is recommended that a coat of wax be applied at least once a month, or whenever the surface no longer repels water.

If the appearance of the paint has diminished to the point where the luster or tone cannot be restored, lightly polish the surface with a fine-grained compound. Never polish just the affected area, but include the surrounding area as well. Always polish in only one direction. A No. 2000 grain compound is recommended. Never use a coarse-grained compound. Coarser grained compounds have a smaller grain-size number and could damage the paint. After polishing with a compound, coat with wax to restore the original luster. Frequent polishing with a compound or an incorrect polishing technique will result in removing the paint layer and exposing the under-

– CONTINUED –

coat. When in doubt, we recommend that you contact your SUBARU dealer or an auto paint specialist.

CAUTION

Do not use any agents with organic solvents on the surface of the bulb assembly cover. However, if a polish or wax with organic solvents is applied to the cover surface, completely wipe off the polish or wax. Otherwise, the cover surface may be damaged.

NOTE

- **Be careful not to block the windshield washer nozzles with wax when waxing the vehicle.**
- **Do not wipe the rear view camera with alcohol, benzine or paint thinner. Otherwise, discoloration may occur. To remove contamination, wipe the camera with a cloth moistened with diluted neutral detergent and then wipe it with a soft, dry cloth.**
- **When waxing the vehicle, be careful not to apply the wax to the rear view camera. If it comes in contact with the camera, moisten a clean cloth with diluted neutral detergent to remove the wax.**

■ Cleaning Alloy Wheels

- Promptly wipe the alloy wheels clean of any kind of grime or agent. If dirt is left on too long, it may be difficult to clean off.
- Do not use soap containing grit to clean the wheels. Be sure to use a neutral cleaning agent, and later rinse thoroughly with water. Do not clean the wheels with a stiff brush or expose them to a high-speed washing device.
- Clean the vehicle (including the alloy wheels) with water as soon as possible when it has been splashed with sea water, exposed to sea breezes, or driven on roads treated with salt or other agents.

10-2. Corrosion Protection

Your SUBARU has been designed and built to resist corrosion. Special materials and protective finishes have been used on most parts of the vehicle to help maintain fine appearance, strength, and reliable operation.

■ Most Common Causes of Corrosion

The most common causes of corrosion are:

- The accumulation of moisture retaining dirt and debris in body panel sections, cavities, and other areas.
- Damage to paint and other protective coatings caused by gravel and stone chips or minor accidents.

Corrosion is accelerated on the vehicle when:

- It is exposed to road salt or dust control chemicals, or used in coastal areas where there is more salt in the air, or in areas where there is considerable industrial pollution.
- It is driven in areas of high humidity, especially when temperatures range just above freezing.

- Dampness in certain parts of the vehicle remains for a long time, even though other parts of the vehicle may be dry.
- High temperatures will cause corrosion to parts of the vehicle which cannot dry quickly due to lack of proper ventilation.

■ To Help Prevent Corrosion

Wash the vehicle regularly to prevent corrosion of the body and suspension components. Also, wash the vehicle promptly after driving on any of the following surfaces.

- Roads that have been salted to prevent them from freezing in winter
- Mud, sand, or gravel
- Coastal roads

After the winter has ended, it is recommended that the underbody be given a very thorough washing.

Before the beginning of winter, check the condition of underbody components, such as the exhaust system, fuel and brake lines, brake cables, suspension, steering system, floor pan, and fenders. If any of them are found to be rusted, they should be given an appropriate rust prevention treatment (except the exhaust system) or should be replaced. We recommend that you contact your SUBARU dealer to perform this kind of maintenance and treatment if you need assistance.

Repair chips and scratches in the paint as soon as you find them.

Check the interior of the vehicle for water and dirt accumulation under the floor mats because that could cause corrosion. Occasionally check under the mats to make sure the area is dry.

Keep your garage dry. Do not park your vehicle in a damp, poorly ventilated garage. In such a garage, corrosion can be caused by dampness. If you wash the vehicle in the garage or put the vehicle into the garage when wet or covered with snow, that can cause dampness.

If your vehicle is operated in cold weather and/or in areas where road salts and other corrosive materials are used, the door hinges and locks, and hood latch should be inspected and lubricated periodically.

10-3. Cleaning the Interior

Use a soft, damp cloth to clean the climate control panel, audio equipment, instrument panel, center console, combination meter panel, and switches. (Do not use organic solvents.)

■ Seat Fabric Material

Remove loose dirt, dust or debris with a vacuum cleaner. If the dirt is caked on the fabric or hard to remove with a vacuum cleaner, use a soft brush then vacuum it.

Wipe the fabric surface with a tightly wrung cloth and dry the seat fabric thoroughly. If the fabric is still dirty, wipe using a solution of mild soap and lukewarm water then dry thoroughly.

If the stain does not come out, try a commercially available fabric cleaner. Use the cleaner on a hidden place and make sure it does not affect the fabric adversely. Use the cleaner according to its instructions.

⚠ CAUTION

When cleaning the seat, do not use benzine, paint thinner, or any similar materials. Doing so could damage the surface and cause the color to

– CONTINUED –

deteriorate.

■ Leather Seat Materials

The leather used by SUBARU is a high quality natural product which will retain its distinctive appearance and feel for many years with proper care.

Allowing dust or road dirt to build up on the surface can cause leather to become brittle and wear prematurely. To maintain its resiliency, leather should be cleaned monthly or whenever it becomes soiled. Some types of clothing textiles may transfer color to the leather.

Before cleaning leather upholstery, vacuum it to remove dust. Use a soft and lint-free cloth dampened with lukewarm water and mild soap, taking care not to soak the leather or allow water to penetrate the stitched seams. Use a gentle circular motion while cleaning the leather - do not rub or apply extreme pressure. Wipe the leather again with another clean, slightly damp cloth to remove soap residue and dry with a soft cloth.

Minor surface blemishes or difficult dirt spots may be treated with a commercial leather spray.

⚠ CAUTION

Never use alcohol, cleaning solvents, leather oils, varnishes or polishes on your leather as it will dry out the leather finish.

If your SUBARU is to be parked for a long time in bright sunlight, it is recommended that the seats and headrests be covered, or the windows shaded, to prevent fading or shrinkage.

You will discover that each leather seat section will develop soft folds or wrinkles, which is characteristic of genuine leather.

■ Synthetic Leather Upholstery

The synthetic leather material used on the SUBARU may be cleaned using mild soap or detergent and water, after first vacuuming or brushing away loose dirt. Allow the soap to soak in for a few minutes and wipe off with a clean, damp cloth. Commercial foam-type cleaners suitable for synthetic leather materials may be used when necessary. Much like genuine leather, some types of fabric used in clothing may transfer color to synthetic leather. If you do not clean transferred color from synthetic leather for an extended period of time, it may be difficult to remove the color, so be sure to clean any such stains from synthetic leather promptly.

⚠ CAUTION

Strong cleaning agents such as solvents, paint thinners, window cleaner or fuel must never be used on leather or synthetic interior materials. Doing so could damage the surface and cause the color to deteriorate.

■ Seatbelt

For details about how to clean the seatbelt, refer to “Seatbelt Maintenance” ☞P75.

■ Instrument Panel, Console Panel, Switches, Combination Meter, and Other Plastic Surface

Use a soft, damp cloth to clean the instrument panel, center console, combination meter panel, and switches.

⚠ CAUTION

- **Do not use organic solvents such as paint thinners or fuel, or strong cleaning agents that contain those solvents. Doing so could damage the surface and**

cause the color to deteriorate.

- **Do not use chemical solvents that contain silicone on the vehicle audio system, electrical components of the air-conditioner or any switches. If silicone adheres to these parts, it may cause damage to electrical components.**

■ Center Information Display

To clean the center information display, wipe it with a silicone cloth or with a soft cloth. If the display(s) is/are extremely dirty, clean it with a soft cloth moistened with neutral detergent then carefully wipe off any remaining detergent.

⚠ CAUTION

- **Do not spray neutral detergent directly onto the display(s). Doing so could damage the monitor's components.**
- **Do not wipe the display(s) with a hard cloth. Doing so could scratch the monitor.**
- **Do not use cleaning fluid that contains thinner, fuel, or any other volatile substance. Such cleaning fluid could erase the lettering on the switches on the display(s).**

■ Cleaning the High Voltage Battery Air Intake

Be sure that you clean the high voltage battery air intake if there is dust or dirt on the high voltage battery air intake, or if the following messages are displayed on the combination meter display: "High Voltage Battery Cooling Performance Reduced" and "Battery Air Cooling Filter Is Clogged Check Owner's Manual".

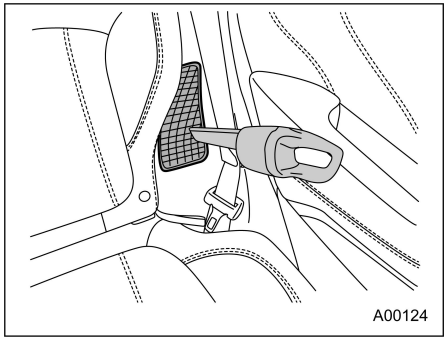

1. Turn the push-button ignition switch to the "OFF" position.
2. When dust accumulates on the cover of the high voltage battery air intake, remove the dust using a vacuum cleaner.
3. Start the e-BOXER system and check that "High Voltage Battery Cooling Performance Reduced" and "Battery Air Cooling Filter Is Clogged Check Owner's Manual" are no longer displayed on the combination meter display. You may need to drive for about 20 minutes in order to clear the warning message. If these messages continue to be displayed after you drive the vehicle for a while, we recommend that you have the vehicle inspected by a SUBARU dealer.

⚠ WARNING

When cleaning the high voltage battery air intake, observe the following: Failure to do so may cause a vehicle breakdown, or vehicle fire, and result in electric shock, other serious injuries or even death.

- **Do not clean the high voltage battery air intake using water or any liquid.**
- **Do not clean the high voltage battery air intake while the e-BOXER system is running.**

– CONTINUED –

- Do not put hands or feet in the high voltage battery air intake.

CAUTION

When cleaning the high voltage battery air intake, pay attention to the following. Failure to do so may result in a decrease in the output of the high voltage battery or a vehicle malfunction.

- Do not use an air blow gun for cleaning to keep dust from entering the high voltage battery air intake.
- Do not put water or any foreign materials in the high voltage battery air intake.

NOTE

- When using the vehicle in the following conditions, clean the high voltage battery air intake every 25,000 km (15,535 miles).
  - Frequent use of the car
  - High-traffic locations such as large cities
  - Cold regions
  - Dusty areas
- If it is difficult to remove dust and sand from the area around the high voltage battery air intake, it is recommended to use a vacuum cleaner with a plastic brush.

11-1. Maintenance Schedule 467
11-2. Maintenance Precautions 471
Before Checking or Servicing in the Engine Compartment..... 471
When Checking or Servicing in the Engine Compartment..... 472
When Checking or Servicing in the Engine Compartment While the Engine Is Running 472
11-3. Maintenance Tips 473
When Replacing Parts 473
Removing and Reinstalling Clips 473
11-4. Engine Hood..... 475
11-5. Engine Compartment Overview 477
11-6. Engine Oil 478
Engine Oil Consumption 478
Checking the Oil Level..... 478
Changing the Oil and Oil Filter..... 480
Recommended Grade and Viscosity..... 480
Synthetic Oil..... 480
11-7. Cooling System..... 481
Cooling Fan, Hose and Connections 481
Engine Coolant..... 482
Inverter with Converter Assembly Coolant 484
11-8. Air Cleaner Element..... 485
Replacing the Air Cleaner Element..... 485
11-9. Spark Plugs 486
Recommended Spark Plugs 486
11-10. Drive Belt 487
11-11. Continuously Variable Transmission Fluid 487
11-12. Front Differential Gear Oil and Rear Differential Gear Oil 487
Recommended Grade and Viscosity 487
11-13. Brake Fluid 488
Checking the Fluid Level..... 488
Recommended Brake Fluid..... 488
11-14. Brake Pedal 489
11-15. Replacement of Brake Pad 489
Breaking-In of New Brake Pads 489
11-16. Tires and Wheels 490
Types of Tires 490
Tire Pressure Monitoring System (TPMS) (If Equipped) 490
Tire Inspection 492
Tire Pressures and Wear 493
Wheel Balance 494
Wear Indicators..... 495
Rotational Direction of Tires..... 495
Tire Rotation 496
Tire Replacement 496
Wheel Replacement..... 500
11-17. Alloy Wheels 501
11-18. Windshield Washer Fluid 501
11-19. Replacement of Wiper Blades 502
Windshield Wiper Blade Assembly 503
Window Wiper Blade Rubber..... 504
Rear Window Wiper Blade Assembly..... 505
Rear Window Wiper Blade Rubber..... 505

11-20. Battery 507
Battery Precautions! 507
High Voltage Battery 508
11-21. Fuses 509
11-22. Installation of Accessories 510
11-23. Replacing Bulbs 510
Headlights 511
Rear Turn Signal Lights 511
Other Bulbs 512
11-24. Replacing Battery 513
Replacing Battery of Access Key Fob 514
The Safe Disposal of Button Batteries 515

11-1. Maintenance Schedule

To keep your vehicle in proper operating condition and to assure peak performance at all times, the recommended maintenance service should be performed in accordance with the maintenance schedule.

NOTE

- **The frequency of scheduled inspection and maintenance services as set forth is minimal. However, it may be necessary that they be performed more frequently depending on road conditions, weather, atmospheric conditions and vehicle usage. These conditions may differ from one country to another. Therefore, there may be special requirement in your country. We recommend that you ask your authorized SUBARU dealer for the actual maintenance schedule applied to your vehicle.**
- **You can set a reminder to be displayed when a scheduled maintenance item is almost due. For details, refer to "General settings" ☞P225.**

Continue periodic maintenance beyond 120,000 km (75,000 miles) or 96 months by returning to the third column of the maintenance schedule and adding 120,000 km (75,000 miles) or 96 months to the column headings.

Symbols used:
R: Replace
I: Inspect, and then adjust, correct or replace if necessary.
P: Perform
(I): Recommended service for safe vehicle operation

MAINTENANCE ITEM		MAINTENANCE INTERVAL (Number of months or km (miles), whichever occurs first)									REMARKS
		Months	12	24	36	48	60	72	84	96	
		× 1,000 km	15	30	45	60	75	90	105	120	
		× 1,000 miles	9	19	28	38	47	56	66	75	
1	Engine oil		R	R	R	R	R	R	R	R	See NOTE 1)
2	Engine oil filter		R	R	R	R	R	R	R	R	See NOTE 1)
3	Drive belt		I	I	I	I	I	I	I	I	

– CONTINUED –

MAINTENANCE ITEM		MAINTENANCE INTERVAL (Number of months or km (miles), whichever occurs first)									REMARKS
		Months	12	24	36	48	60	72	84	96	
		× 1,000 km	15	30	45	60	75	90	105	120	
		× 1,000 miles	9	19	28	38	47	56	66	75	
4	Cooling system, hoses and connections			I		I		I		I	
5	Engine coolant/Inverter with converter assembly coolant (if equipped)		1st replacement: **132 months (11 years)/220,000 km (137,500 miles)** From the 2nd replacement: **72 months (6 years)/120,000 km (75,000 miles)**								
6	Fuel system, lines and connections			I		I		I		I	See NOTE 2)
7	Fuel filter	For Europe*								R	Replace every 120,000 km (75,000 miles)
		Except for Europe						R			Replace every 90,000 km (56,000 miles)
8	Air cleaner element		I	I	R	I	I	R	I	I	Replace every 45,000 km (28,000 miles)
9	Spark plugs								R		Replace every 105,000 km (66,000 miles)
10	Front differential and rear differential lubricants (gear oil)			I		R		I		R	See NOTE 3)

*: Except for CIS and Israel

MAINTENANCE ITEM		MAINTENANCE INTERVAL (Number of months or km (miles), whichever occurs first)									REMARKS
		Months	12	24	36	48	60	72	84	96	
		× 1,000 km	15	30	45	60	75	90	105	120	
		× 1,000 miles	9	19	28	38	47	56	66	75	
11	Continuously variable transmission fluid			I		I		I		I	See NOTE 4)
12	Brake fluid			R		R		R		R	See NOTE 5)
13	Disc brake pads and discs/Front and rear axle boots and axle shaft joint portions		I	I	I	I	I	I	I	I	See NOTE 2)
14	Brake lining and drums (including parking brake linings and drums)			I		I		I		I	See NOTE 2)
15	Inspect brake lines and check operation of parking and service brake system			P		P		P		P	See NOTE 2)
16	Steering and suspension system			I		I		I		I	See NOTE 2)
17	Front and rear wheel bearing									(I)	
18	Cabin air filter (except for CIS and Israel)		I	R	I	R	I	R	I	R	See NOTE 6)
19	Cabin air filter (for CIS and Israel)		Replace every 12 months or 12,000 km (7,500 miles) whichever occurs first								See NOTE 6)
20	SUBARU GENUINE FUEL ADDITIVE (In areas where the impurity content in the fuel is high)		Add a bottle to the fuel tank every 15,000 km (9,000 miles)								See NOTE 7)

– CONTINUED –

NOTE

1) When the vehicle is used under severe driving conditions mentioned in the following examples*, the engine oil and oil filter should be changed more frequently.
2) When the vehicle is used under severe driving conditions mentioned in the following examples*, inspection should be performed at every 15,000 km (9,000 miles) or 12 months whichever occurs first.
3) When the vehicle is frequently operated under severe driving conditions, such as towing a trailer, replacement of differential gear oil (front and rear) should be performed more frequently.
4) When the vehicle is used under the severe driving conditions mentioned in the following examples*, the continuously variable transmission fluid should be changed every 45,000 km (28,000 miles).
5) When the vehicle is used in the following areas, change fluid every 15,000 km (9,000 miles) or 12 months whichever occurs first.
(1) High humidity areas
(2) Mountainous areas
6) When the vehicle is used under severe driving conditions mentioned in the following examples*, the air cleaner element and air filter should be replaced more frequently.
7) In areas where the impurity content in the fuel is high.

* Examples of severe driving conditions:
(1) Operating in extremely cold weather (items 1, 2 and 16 only)
(2) Towing a trailer (items 1, 2, 10, 11, 13, 15 and 16 only)
(3) Repeated short trips (items 1, 2, 13 and 14 only)
(4) Driving on dusty roads (items 8, 13, 14, 18 and 19 only)
(5) Driving on rough and/or muddy roads (items 13, 14, 16, 18 and 19 only)
(6) Driving in areas that use road salt or other corrosive materials (items 6, 13, 14, 15 and 16 only)
(7) Living on coastal areas (items 6, 13, 14, 15 and 16 only)

11-2. Maintenance Precautions

When maintenance and service are required, it is recommended that all work be done by an authorized SUBARU dealer.

If you perform maintenance and service by yourself, you should familiarize yourself with the information provided in this section on general maintenance and service for your SUBARU.

Incorrect or incomplete service could cause improper or unsafe vehicle operation. Any problems caused by improper maintenance and service performed by you are not eligible for warranty coverage.

WARNING

- **Always select a safe area when performing maintenance on your vehicle.**
- **Always be very careful to avoid injury when working on the vehicle. Remember that some of the materials in the vehicle may be hazardous if improperly used or handled, for example, battery acid.**
- **Your vehicle should only be serviced by persons fully competent to do so. Serious personal injury may result to persons not experienced in servicing vehicles.**
- **Always use the proper tools and make certain that they are well maintained.**
- **Never get under the vehicle supported only by a jack. Always use safety stands to support the vehicle.**
- **Never keep the e-BOXER system running in a poorly ventilated area, such as a garage or other closed areas.**
- **Do not smoke or allow open flames around the fuel or 12 V battery. This will cause a fire.**
- **Because the fuel system is under pressure, we recommend that you have your SUBARU dealer perform the replacement of the fuel filter.**
- **Wear adequate eye protection to guard against getting oil or fluids in your eyes. If something does get in your eyes, thoroughly wash them out with clean water.**
- **Do not tamper with the wiring of the SRS airbag system or seatbelt pretensioner system, or attempt to take its connectors apart, as that may activate the system or it can render it inoperative when it should be operative. NEVER use a circuit tester for these wiring. If your SRS airbag or seatbelt pretensioner needs service, we recommend that you consult your nearest SUBARU dealer.**
- **Check the inside of the engine compartment to see if there are any cloths and tools left. If they are left inside, they may be a cause of malfunction and fire.**

■ Before Checking or Servicing in the Engine Compartment

WARNING

- **Always stop the e-BOXER system and apply the parking brake to prevent the vehicle from moving.**
- **Always let the engine cool down. Engine parts become very hot when the engine is running and remain hot for some time after the**

– CONTINUED –

engine is stopped.

- Do not spill engine oil, engine coolant, brake fluid or any other fluid on hot engine components. This may cause a fire.
- When the ignition switch is in the "ON" position, the cooling fan may operate suddenly even when the e-BOXER system is stopped. If your body or clothes come into contact with a rotating fan, that could result in serious injury. To avoid risk of injury, perform the following precautions.
  - Always turn the push-button ignition switch to the "OFF" position and confirm that the operation indicator on the switch is turned off. Then take the access key fob out from the vehicle.

■ When Checking or Servicing in the Engine Compartment

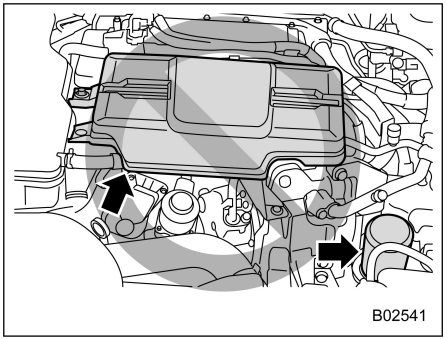

CAUTION

- Do not contact the cover while checking the components in the engine compartment. Doing so may cause your hand to slip off the cover and result in an unexpected injury.

- Do not touch the oil filter until the engine has cooled down completely. Doing so may result in a burn or other injury. Note that the oil filter becomes very hot when the engine is running and remains hot for some time after the engine has stopped.

■ When Checking or Servicing in the Engine Compartment While the Engine Is Running

WARNING

A running engine can be dangerous. Keep your fingers, hands, clothing, hair and tools away from the cooling fan, the drive belt and any other moving engine parts. Removing rings, watches and ties is advisable.

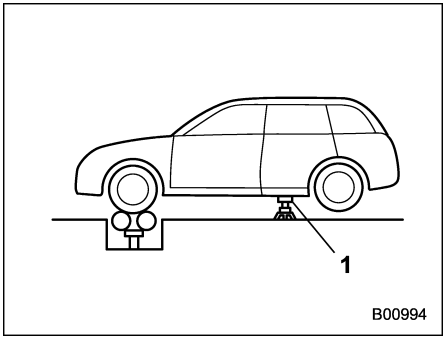

1 Safety stand

For any maintenance and inspection performed on AWD models which requires a running e-BOXER system and wheels turning, jack up all four wheels or use free rollers to prevent the vehicle from moving. Never race the engine or brake suddenly.

11-3. Maintenance Tips

■ When Replacing Parts

For information about replacement parts for maintenance, we recommend that you contact any authorized SUBARU dealer or repairer, or another duly qualified and equipped professional.

■ Removing and Reinstalling Clips

Some clips and fender linings must be removed before replacing the air cleaner element or specific bulbs.

▼ Removing clips

There are several types of clips used for your vehicle.

▽ Type A and D clips

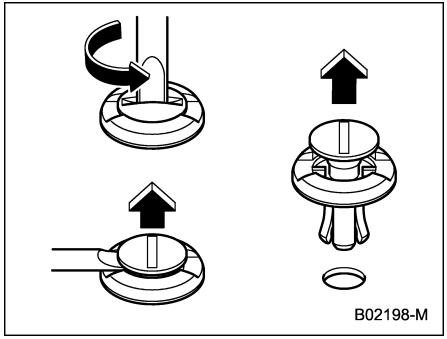

Type A clips

– CONTINUED –

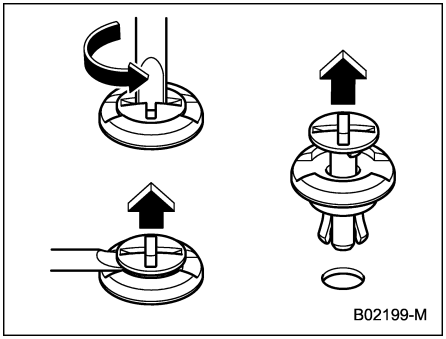

Type D clips

1. Turn the clips counterclockwise using a flat-head screwdriver until the center portion of the clip is raised.
2. Remove the clips with a flat-head screwdriver using leverage.

▽ Type B clips

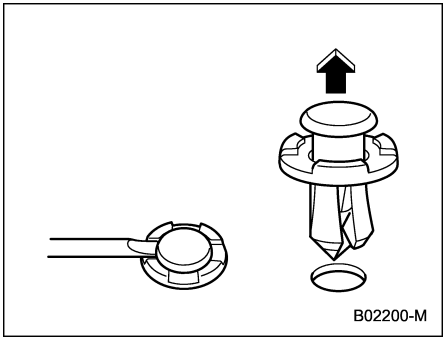

1. Pull out the center portion of the clip using a flat-head screwdriver as shown in the illustration.
2. Pull the protruded center portion to remove the entire body of the clip.

▽ Type C clips

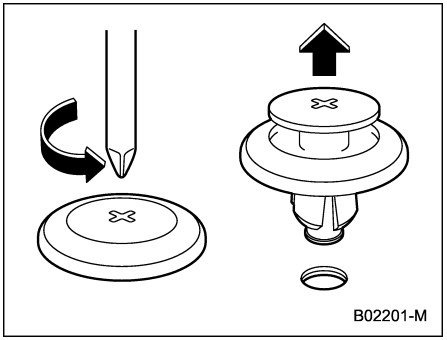

1. Turn the clip counterclockwise using a Phillips screwdriver until the center portion of the clip is raised.
2. Remove the entire clip by pulling it up.

▼ **Reinstalling clips**

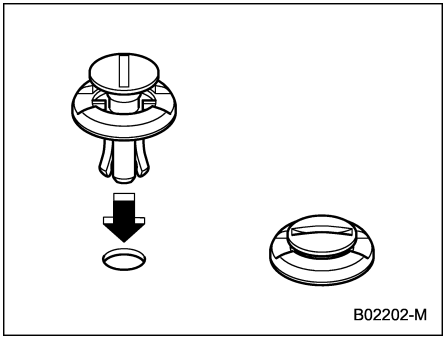

Type A clips

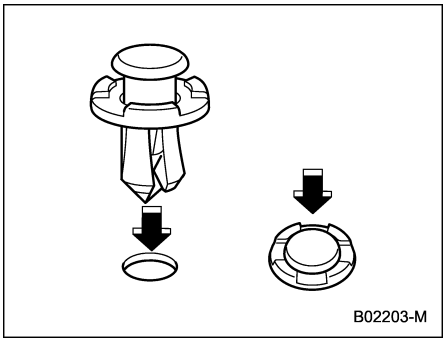

Type B clips

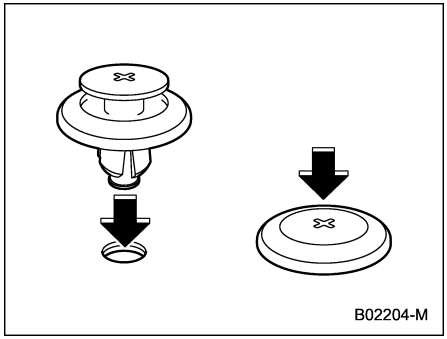

Type C clips

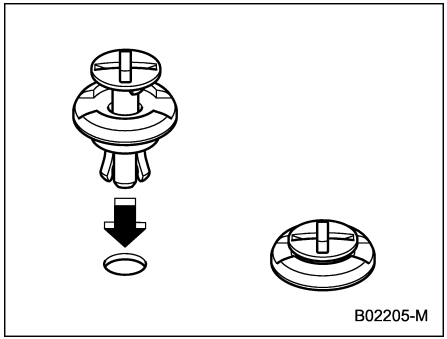

Type D clips

Insert the clip without the center portion first and then push the center portion of the clip into the hole.

11-4. Engine Hood

⚠ CAUTION

- **Be extremely careful not to catch fingers or other objects when closing the engine hood.**
- **Do not push the hood forcibly to close it. It could deform the metal.**
- **Be extremely careful opening the engine hood when the wind is strong. The engine hood could close suddenly, possibly causing injuries from slamming.**
- **Do not install accessories other than genuine SUBARU parts to the engine hood. If the engine hood becomes too heavy, the stay may not be able to support holding it open.**
- **Check that the end of the hood prop is inserted into the slot. If it is not inserted properly, the hood may drop and cause injury.**

NOTE

If the base of the hood prop is jammed, put the hood prop back in position without applying excessive force.

– CONTINUED –

To open the hood:

1. If the wiper blades are lifted off the windshield, return them to their original positions.

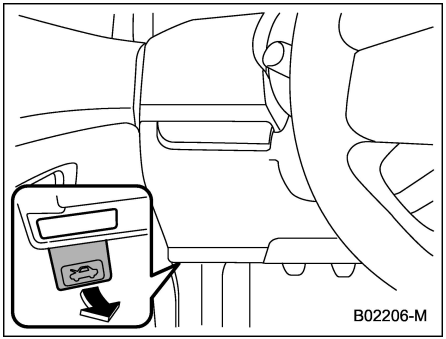

2. Pull the hood release knob under the instrument panel.

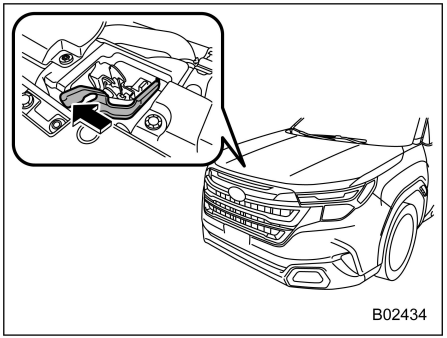

3. Release the secondary hood release by moving the lever between the front grille and the hood toward the left.

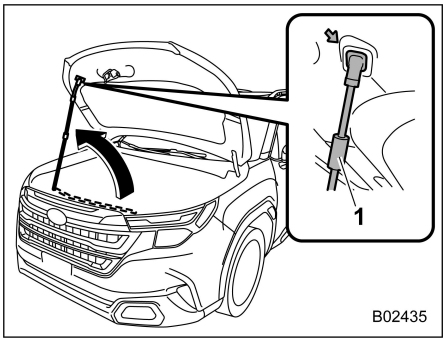

1 Grip

4. Lift up the hood, release the hood prop from its retainer and put the end of the hood prop into the slot in the hood. Hold the grip for handling the hood prop.

To close the hood:

1. Lift the hood slightly and remove the hood prop from the slot in the hood and return the prop to its retainer.
2. Lower the hood to a height of approximately 20 to 30 cm (7.8 to 11.8 in) above its closed position and then let it drop.
3. After closing the hood, be sure the hood is securely locked.

If this does not close the hood, release it from a slightly higher position.

WARNING

Always check that the hood is properly locked before you start driving. If it is not, it might fly open while the vehicle is moving and block your view, which may cause an accident and serious bodily injury.

11-5. Engine Compartment Overview

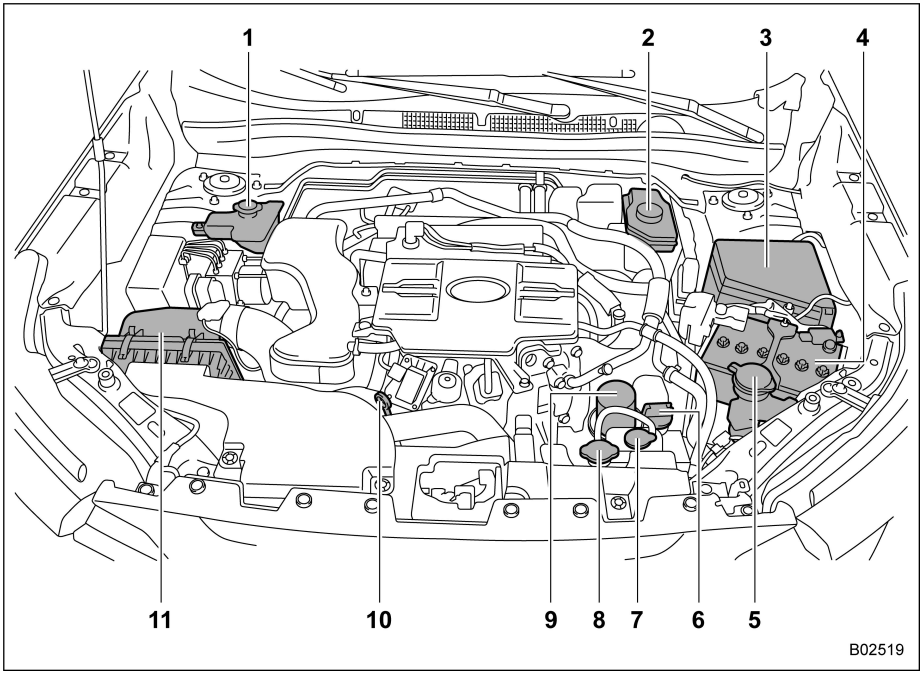

The illustration above is for left-hand drive models. The location of item No. 2 (brake fluid reservoir) for right-hand drive models is the opposite of that shown here.

1 Inverter with converter assembly coolant reservoir (page 484)
2 Brake fluid reservoir (page 488)
3 Main fuse box (page 509)
4 12 V battery (page 507)
5 Washer fluid tank (page 501)
6 Engine oil filler cap (page 478)
7 Engine coolant reservoir (page 482)
8 Radiator cap (page 482)
9 Engine oil filter (page 480)
10 Engine oil level gauge (page 478)
11 Air cleaner case (page 485)

11-6. Engine Oil

CAUTION

- **If the level gauge is not pulled out easily, twist the level gauge right and left, then pull it out. Otherwise, you may be injured accidentally straining yourself.**
- **Use only engine oil with the recommended grade and viscosity.**
- **Be careful not to spill engine oil when adding it. If oil touches the exhaust pipe, it may cause a bad smell, smoke, and/or a fire. If engine oil gets on the exhaust pipe, be sure to wipe it off.**

■ Engine Oil Consumption

Some engine oil will be consumed while driving. The rate of consumption can be affected by such factors as transmission type, driving style, terrain and temperature. Under the following conditions, oil consumption can be increased and thus require refilling between maintenance intervals:

- When the engine is new and within the break-in period
- When the engine oil is of lower quality
- When the incorrect oil viscosity is used
- When engine braking is employed (repeatedly)
- When the engine is operated at high engine speeds (for extended periods of time)
- When the engine is operated under heavy loads (for extended periods of time)
- When towing a trailer
- When the engine idles for extended periods of time
- When the vehicle is operated in stop and go and/or heavy traffic situations
- When the vehicle is used under severe thermal conditions
- When the vehicle accelerates and decelerates frequently

Under these or similar conditions, you should check your oil at least every 2nd fuel fill-up and change your engine oil more frequently. If your oil consumption rate is greater than 1 liter every 2,000 km (1 US qt every 1,200 miles, 1 Imp qt every 1,413 miles), we recommend that you contact your SUBARU dealer who may perform a test under controlled conditions.

■ Checking the Oil Level

1. Park the vehicle on a level surface and stop the engine. If you check the oil level just after stopping the engine, wait for at least 5 minutes for the oil to drain back into the oil pan before checking the level.

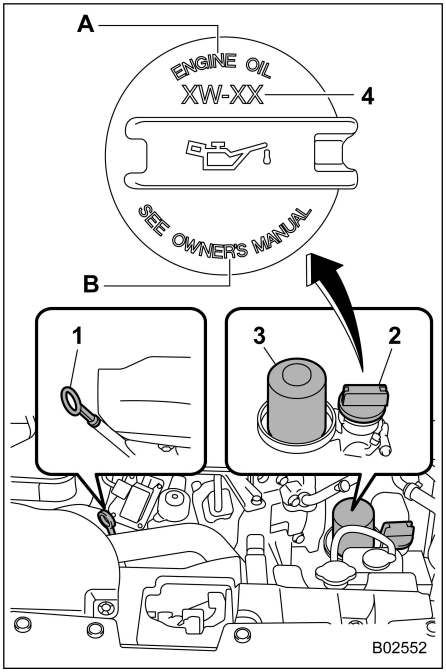

1 Oil level gauge
2 Oil filler cap
3 Oil filter
4 Oil viscosity
0W-16
A ENGINE OIL
B SEE OWNER'S MANUAL

CAUTION

If the level gauge is not pulled out easily, twist the level gauge right and left, then pull it out. Otherwise, you may be injured accidentally straining yourself.

2. Pull out the level gauge, wipe it clean, and insert it again.
3. Be sure the level gauge is correctly inserted until it stops.

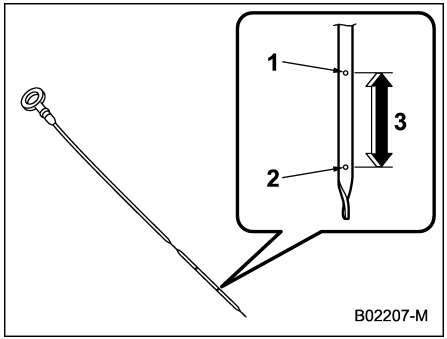

1 Full level
2 Low level
3 Approximately 1.0 liters (1.1 US qt, 0.9 Imp qt) from low level to full level

4. Pull out the oil level gauge again.
5. Check the oil levels on both sides of the level gauge. The engine oil level must be judged by the lowest of the two levels. If the oil level is below the low level mark, add oil so that the full level is reached.

CAUTION

- **Be careful not to touch the engine oil filter when removing the oil filler cap. Doing so may result in a burn, a pinched finger, or may cause some other injury.**
- **Use only engine oil with the recommended grade and viscosity.**
- **Be careful not to spill engine oil when adding it. If oil touches the exhaust pipe, it may cause a bad smell, smoke, and/or a fire. If engine oil gets on the exhaust pipe, be sure to wipe it off.**

To add engine oil, remove the engine oil filler cap and slowly pour engine oil through the filler neck. After pouring oil into the engine, you must use the level gauge to confirm that the oil level is correct.

NOTE

- **To prevent overfilling the engine oil, do not add any additional oil above**

– CONTINUED –

the full level when the engine is cold.

- **The engine low oil level warning light may stay illuminated when the engine is started straight after topping up or changing the engine oil. In such cases, park the vehicle on a level surface and wait for more than a minute until the oil level settles, after which the warning light will turn off. Refer to "Engine Low Oil Level Warning Light" ☞P185.**

■ Changing the Oil and Oil Filter

Change the oil and oil filter according to the maintenance schedule.

The engine oil and oil filter must be changed more frequently than listed in the maintenance schedule, when short trips are frequently made, when towing a trailer, or when driving in extremely cold weather.

NOTE

- **Changing the engine oil and oil filter should be performed by a well-trained expert. We recommend that you contact your SUBARU dealer for changing the engine oil and oil filter. Fully trained mechanics are on standby at a SUBARU dealer to utilize the special tools, spare parts and recommended oil for this work, and also, used oils are properly disposed of.**
- **If performing oil replacement yourself, observe the local regulations and dispose of waste oil properly.**

■ Recommended Grade and Viscosity

⚠ CAUTION

Use only engine oil with the recommended grade and viscosity.

Refer to "Engine Oil" ☞P521.

NOTE

Engine oil viscosity (thickness) affects fuel economy. Oils of lower viscosity provide better fuel economy. However, in hot weather, oil of higher viscosity is required to properly lubricate the engine.

■ Synthetic Oil

You should use synthetic engine oil that meets the same requirements given for conventional engine oil. When using synthetic oil, you must use oil of the same classification, viscosity and grade shown in this Owner's Manual. Refer to "Engine Oil" ☞P521. Also, you must follow the oil and filter changing intervals shown in the maintenance schedule. Refer to "Maintenance Schedule" ☞P467.

NOTE

Synthetic oil of the grade and viscosity noted in chapter 12 is the recommended engine oil for optimum engine performance. Conventional oil may be used if synthetic oil is unavailable.

11-7. Cooling System

WARNING

- **Never remove the radiator cap until the engine has been shut off and has cooled down completely. Since the coolant is under pressure, you may suffer serious burns from a spray of boiling hot coolant when the cap is removed.**
- **Be careful of the rotating cooling fan when the engine hood is open. When the engine temperature is high, the cooling fan in the engine compartment may operate when the ignition switch is in the "ON" position, even if the engine is stopped. Touching the cooling fan while it is rotating may result in injury.**

CAUTION

- **The cooling system has been filled at the factory with a high quality, corrosion-inhibiting, year-around coolant which provides protection against freezing down to −36°C (−33°F). Make sure to always use genuine SUBARU SUPER COOLANT or an equivalent (non-amine type coolant).**
- **If the coolant requires water dilution, be sure to use soft water (or clear and drinkable water) and to follow the required dilution ratio.**
- **Mixing with a different coolant and/or hard water may result in problems including, but not limited to, shortened engine component life, cooling system clogging, coolant leaks and engine damage from overheating. Therefore, never mix different kinds of coolant and/or hard water even if freezing temperatures are not expected.**
- **Do not splash the engine coolant over painted parts. The alcohol contained in the engine coolant may damage the paint surface.**

■ Cooling Fan, Hose and Connections

Your vehicle employs an electric cooling fan which is thermostatically controlled to operate when the engine coolant reaches a specific temperature.

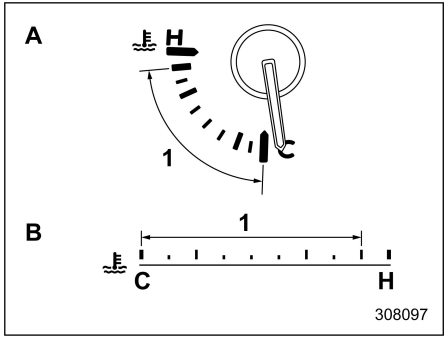

A 4.2-inch meter display models
B 12.3-inch meter display models
1 Normal operating range

If the radiator cooling fan does not operate even when the engine coolant temperature gauge exceeds the normal operating range, the cooling fan circuit may be defective. Refer to "Engine Coolant Temperature Gauge" ☞P177.

Check the fuse and replace it if necessary. Refer to "Fuses" ☞P509. If the fuse is not blown, we recommend that you have the

– CONTINUED –

cooling system checked by your SUBARU dealer.

If the frequent addition of coolant is necessary between vehicle service visits, it is recommended that you have your vehicle inspected by an authorized SUBARU dealer to check for leaks, damage, or looseness.

■ Engine Coolant

▼ Checking the coolant level

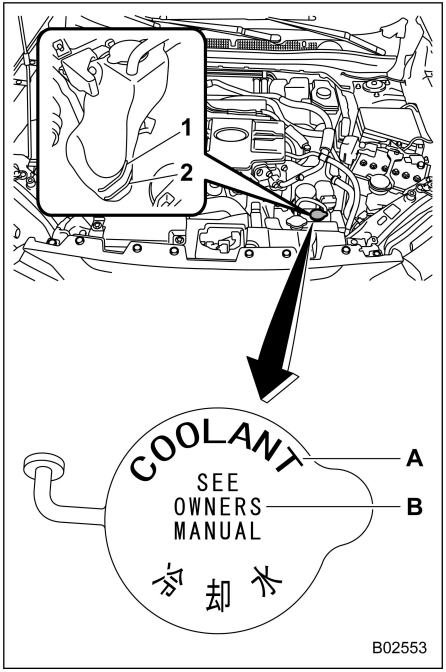

1 “FULL” level mark
2 “LOW” level mark
A COOLANT
B SEE OWNER’S MANUAL

Check the coolant level, such as at fuel stops.

1. Check the coolant level on the outside of the reservoir while the engine is cool.
2. If the level is close to or lower than the “LOW” level mark, add coolant up to the “FULL” level mark.

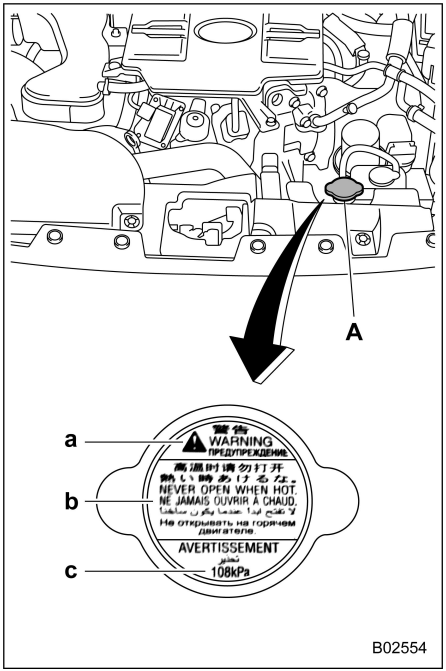

A Radiator cap

Label on the cap

a WARNING

b NEVER OPEN WHEN HOT.

c 108 kPa

3. If the reserve tank is empty, remove the radiator cap and refill coolant up to just below the filler neck as shown in the following illustration.

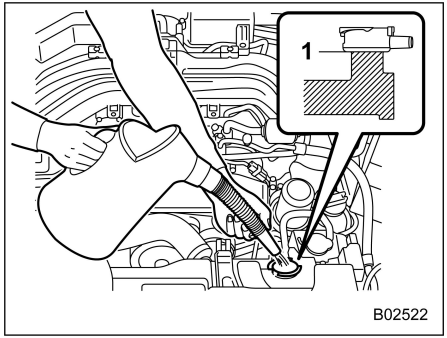

1 Fill up to this level.

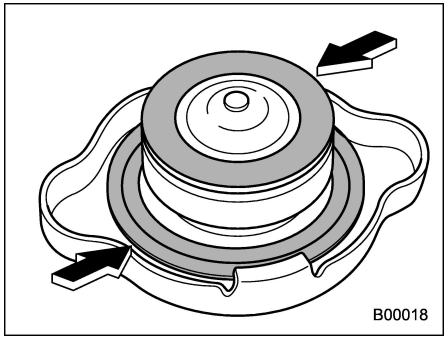

4. After refilling the reserve tank and the radiator, check the radiator cap for debris and the gasket rubber for damage.

⚠ CAUTION

- **Be careful not to spill engine coolant when adding it. If coolant touches the exhaust pipe, it may cause a bad smell, smoke, and/or a fire. If engine coolant gets on the exhaust pipe, be sure to wipe it off.**
- **Do not splash the engine coolant over painted parts. The alcohol contained in the engine coolant may damage the paint surface.**

5. Reinstall the cap and check that the rubber gaskets inside the radiator cap are in the proper position.

▼ Changing the coolant

⚠ CAUTION

To ensure that your engine runs at its optimum operating temperature thereby ensuring maximum power output and fuel efficiency, it is extremely important that the correct engine coolant be used. Because the combination of aluminum, rubber and synthetics used in SUBARU

– CONTINUED –

engines is unique, it is necessary to ensure that the correct formulation of inhibitors are present in coolant. It is also equally important to ensure that no additional minerals or impurities are added and SUBARU therefore only recommends the use of pre-mixed genuine SUBARU SUPER COOLANT.

It may be difficult to change the coolant. We recommend that you have the coolant changed by your SUBARU dealer if necessary.

The coolant should be changed according to the maintenance schedule in the "Maintenance Schedule" ☞P467.

■ Inverter with Converter Assembly Coolant

▼ Checking the coolant level

⚠ WARNING

Never remove the reservoir cap for inverter with converter assembly coolant until the e-BOXER system has been shut off and has cooled down completely. Since the coolant is under pressure, you may suffer serious burns from a spray of boiling hot coolant when the cap is removed.

1. Check the coolant level on the outside of the reservoir while the engine is cool.
2. If the level is close to or lower than the "LOW" level mark, remove the reservoir cap and add coolant up to the "FULL" level mark.

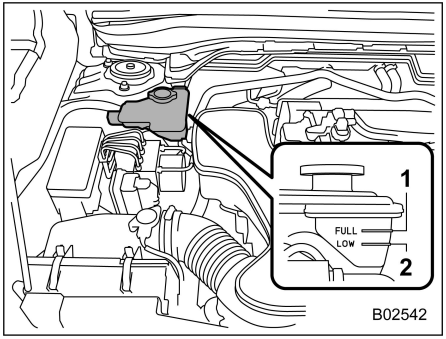

1 "FULL" level mark
2 "LOW" level mark

3. After refilling the reserve tank, reinstall the cap and check that the rubber gaskets inside the reservoir cap are in the proper position.

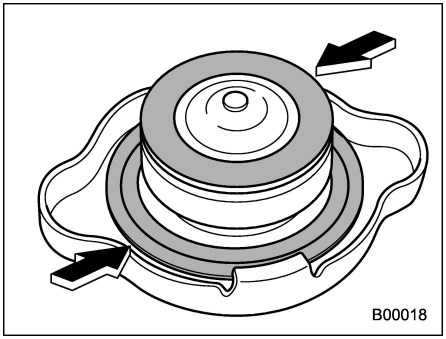

⚠ CAUTION

- **Be careful not to spill inverter with converter assembly coolant when adding it. If coolant touches the exhaust pipe, it may cause a bad smell, smoke, and/or a fire. If inverter with converter assembly coolant gets on the exhaust pipe, be sure to wipe it off.**
- **Do not splash the inverter with converter assembly coolant over painted parts. The alcohol contained in the inverter with converter assembly coolant may damage the paint surface.**

▼ **Changing the coolant**

⚠ CAUTION

To ensure that your engine runs at its optimum operating temperature thereby ensuring maximum power output and fuel efficiency, it is extremely important that the correct engine coolant be used. Because the combination of aluminum, rubber and synthetics used in SUBARU engines is unique, it is necessary to ensure that the correct formulation of inhibitors are present in coolant. It is also equally important to ensure that no additional minerals or impurities are added and SUBARU therefore only recommends the use of pre-mixed genuine SUBARU SUPER COOLANT.

It may be difficult to change the coolant. We recommend that you have the coolant changed by your SUBARU dealer if necessary.

The coolant should be changed according to the maintenance schedule in the "Maintenance Schedule" ☞P467.

11-8. Air Cleaner Element

⚠ WARNING

Do not operate the engine with the air cleaner element removed. The air cleaner element not only filters intake air but also stops flames if the engine backfires. If the air cleaner element is not installed when the engine backfires, you could be burned.

⚠ CAUTION

When replacing the air cleaner element, we recommend that you use a genuine SUBARU air cleaner element. If it is not used, there is the possibility of causing a negative effect to the engine.

The air cleaner element functions as a filter screen. When the air cleaner element is perforated or removed, engine wear will be excessive and engine life shortened.

It is not necessary to clean or wash the air cleaner element.

■ Replacing the Air Cleaner Element

Replace the air cleaner element according to the maintenance schedule. Refer to "Maintenance Schedule" ☞P467. Under extremely dusty conditions, replace it more frequently. It is recommended that you always use genuine SUBARU parts.

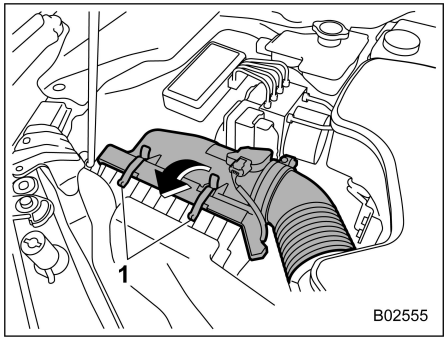

1 Clips

1. Unsnap the two clips holding the air cleaner case (rear).
2. Open the air cleaner case and pull the cover rearward while lifting it up.

– CONTINUED –

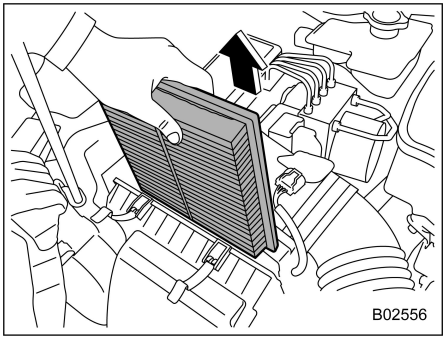

3. Remove the air cleaner element.
4. Clean the inside of the air cleaner case (both front and rear) with a damp cloth and install a new air cleaner element.

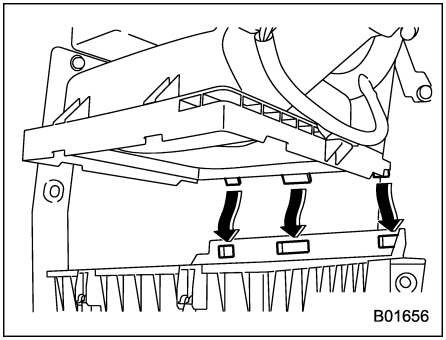

5. To install the air cleaner case (rear), insert the three projections on the air cleaner case (rear) into the slits on the air cleaner case (front).
6. Install in the reverse order of removal.

NOTE

Install the air cleaner element so that the surface with "UPR" printed on it faces upward.

11-9. Spark Plugs

It may be difficult to replace the spark plugs. It is recommended that you have the spark plugs replaced by your SUBARU dealer.

The spark plugs should be replaced according to the maintenance schedule. Refer to "Maintenance Schedule" ☞P467.

■ Recommended Spark Plugs

Refer to "Electrical System" ☞P525.

11-10. Drive Belt

It is unnecessary to check the deflection of the drive belt periodically because your engine is equipped with an automatic belt tension adjuster. However, replacement of the drive belt should be done according to the maintenance schedule in the “Maintenance Schedule” ☞P467. We recommend that you consult your SUBARU dealer for replacement.

If the drive belt is loose, cracked or worn, we recommend that you contact your SUBARU dealer.

11-11. Continuously Variable Transmission Fluid

There is no fluid level gauge. It is unnecessary to check the continuously variable transmission fluid level. However, if necessary, we recommend that you consult your SUBARU dealer for inspection.

11-12. Front Differential Gear Oil and Rear Differential Gear Oil

There is no oil level gauge. To check the front and rear differential gear oil level, we recommend that you consult your SUBARU dealer.

■ Recommended Grade and Viscosity

Each oil manufacturer has its own base oils and additives. Never use different brands together. For details, refer to “Front Differential and Rear Differential Gear Oil” ☞P523.

⚠ CAUTION

Using a differential gear oil other than the specified oil may cause a decline in vehicle performance.

11-13. Brake Fluid

■ Checking the Fluid Level

⚠ WARNING

- **Never let brake fluid contact your eyes because brake fluid can be harmful to your eyes. If brake fluid gets in your eyes, immediately flush them thoroughly with clean water. For safety, when performing this work, wearing eye protection is advisable.**
- **Brake fluid absorbs moisture from the air. Any absorbed moisture can cause a dangerous loss of braking performance.**
- **If the vehicle requires frequent refilling, there may be a leak. If you suspect a problem, we recommend that you have the vehicle checked at your SUBARU dealer.**

⚠ CAUTION

- **When adding brake fluid, be careful not to allow any dirt into the reservoir.**
- **Never splash the brake fluid over painted surfaces or rubber parts. Alcohol contained in the brake fluid may damage them.**
- **Be careful not to spill brake fluid when adding it. If brake fluid touches the exhaust pipe, it may cause a bad smell, smoke, and/or a fire. If brake fluid gets on the exhaust pipe, be sure to wipe it off.**

Visually check the brake fluid level of the reservoir monthly on the even surface.

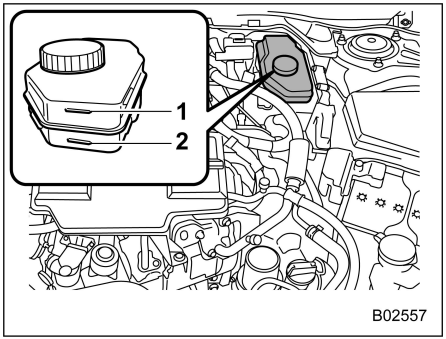

1 “MAX” level line
2 “MIN” level line

Be sure to check the brake fluid level from the outside of the reservoir. If the fluid level is below “MIN”, top up brake fluid to “MAX”.

Use only brake fluid from a sealed container.

■ Recommended Brake Fluid

Refer to “Fluids” ☞P524.

⚠ CAUTION

Never use different brands of brake fluid together. Also, avoid mixing DOT 3 and DOT 4 brake fluids even if they are the same brand.

11-14. Brake Pedal

Check the brake pedal free play and reserve distance according to the maintenance schedule.

11-15. Replacement of Brake Pad

CAUTION

- **If you continue to drive despite the scraping noise from the audible brake pad wear indicator, it will result in the need for costly brake rotor repair or replacement.**
- **It is recommended that you disconnect the 12 V battery before replacing the brake pad. However, it is dangerous to disconnect the 12 V battery. We recommend that you have your SUBARU dealer replace the brake pad.**

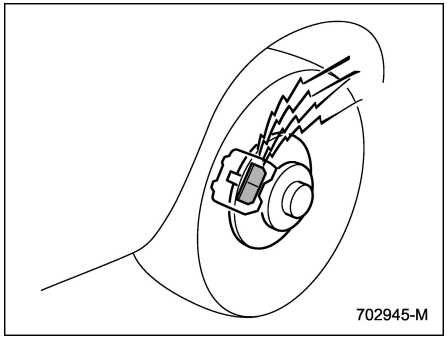

The disc brakes have audible wear indicators on the brake pads. If the brake pads wear close to their service limit, the wear indicator makes a very audible scraping noise when the brake pedal is applied.

If you hear this scraping noise each time you apply the brake pedal, we recommend that you have the brake pads serviced by your SUBARU dealer as soon as possible.

■ Breaking-In of New Brake Pads

When replacing the brake pad, we recommend that you use only genuine SUBARU parts. After replacement, the new parts must be broken in as follows:

– CONTINUED –

▼ **Brake pad**

While maintaining a speed of 50 to 65 km/h (30 to 40 mph), step on the brake pedal lightly. Repeat this five or more times.

⚠ WARNING

A safe location and situation should be selected for break-in driving.

11-16. Tires and Wheels

■ Types of Tires

You should be familiar with type of tires present on your vehicle.

▼ **All season tires**

All season tires are designed to provide an adequate measure of traction, handling and braking performance in year-round driving including snowy and icy road conditions. However, all season tires do not offer as much traction performance as winter (snow) tires in heavy or loose snow or on icy roads.

All season tires are identified by “ALL SEASON” and/or “M+S” (Mud & Snow) on the tire sidewall.

▼ **Summer tires**

Summer tires are high-speed capability tires best suited for highway driving under dry conditions.

Summer tires are inadequate for driving on slippery roads such as on snow-covered or icy roads.

If you drive your vehicle on snow-covered or icy roads, we strongly recommend the use of winter (snow) tires.

When installing winter tires, be sure to replace all four tires.

▼ **Winter (snow) tires**

Winter tires are best suited for driving on snow-covered and icy roads. However, winter tires do not perform as well as summer tires and all season tires on roads other than snow-covered and icy roads.

■ Tire Pressure Monitoring System (TPMS) (If Equipped)

The tire pressure monitoring system provides the driver with a warning message by sending a signal from a sensor that is installed in each wheel when tire pressure is severely low. The tire pressure monitoring system will activate only when the vehicle is driven. Also, this system may not react immediately to a sudden drop in tire pressure (for example, a blow-out caused by running over a sharp object).

If you adjust the tire pressures in a warm garage and will then drive the vehicle in cold outside air, the resulting drop in tire pressures may cause the low tire pressure warning light to illuminate. To avoid this problem when adjusting the tire pressures in a warm garage, inflate the tires to pressures higher than those shown on the tire inflation pressure label. Specifically, inflate them by an extra 6.9 kPa (0.07 kgf/cm^2, 1 psi) for every difference of 5.6°C (10°F) between the temperature in the

garage and the temperature outside. By way of example, the following table shows the required tire pressures that correspond to various outside temperatures when the temperature in the garage is 15.5°C (60°F).

Example:

Tire size: 235/50R19 99V

Standard tire pressures:

Front: 230 kPa (2.3 kgf/cm², 33 psi)

Rear: 220 kPa (2.2 kgf/cm², 32 psi)

Garage temperature: 15.5°C (60°F)

Outside temperature	Adjusted pressure [kPa (kgf/cm², psi)]	
	Front	Rear
−1°C (30°F)	250 (2.5, 36)	240 (2.4, 35)
−12°C (10°F)	265 (2.65, 38)	255 (2.55, 37)
−23°C (−10°F)	280 (2.8, 41)	270 (2.7, 39)

If the low tire pressure warning light illuminates when you drive the vehicle in cold outside air after adjusting the tire pressures in a warm garage, re-adjust the tire pressures using the method described above. Then, increase the vehicle speed to at least 40 km/h (25 mph) and check to see that the low tire pressure warning light goes off a few minutes later. If the low tire pressure warning light does not go off, the tire pressure monitoring system may not be functioning normally. In this event, we recommend that you go to a SUBARU dealer to have the system inspected as soon as possible.

While the vehicle is driven, friction between tires and the road surface causes the tires to warm up. After illumination of the low tire pressure warning light, any increase in the tire pressures caused by an increase in the outside air temperature or by an increase in the temperature in the tires can cause the low tire pressure warning light to go off.

It may not be possible to install TPMS valves on certain wheels that are on the market. Therefore, if you change the wheels (for example, a switch to snow tires), use wheels that have the same part number as the standard-equipment wheels. Without four operational TPMS valve/sensors on the wheels, the TPMS will not fully function and the warning light in the instrument panel will illuminate steadily after blinking for approximately one minute.

⚠ WARNING

- **If the low tire pressure warning light does not illuminate briefly after the ignition switch is turned on or the light illuminates steadily after blinking for approximately one minute, we recommend that you have your Tire Pressure Monitoring System checked at a SUBARU dealer as soon as possible.**

  If this light illuminates while driving, never brake suddenly but keep driving straight ahead while gradually reducing speed. Then slowly pull off the road to a safe place. Otherwise an accident involving serious vehicle damage and serious personal injury could occur.

  If this light still illuminates while driving after adjusting the tire pressure, a tire may have significant damage and a fast leak that causes the tire to lose air rapidly. If you have a flat tire, refer to "Flat Tires" ☞P430.

- **When a replacement tire is mounted or a wheel rim is replaced without the original pressure sensor/transmitter being transferred, the low tire pressure warning light will illuminate steadily after blinking for approximately one minute. This indicates the TPMS is unable to monitor all four road wheels. We recommend that you contact your SUBARU**

– CONTINUED –

dealer as soon as possible for tire and sensor replacement and/or system resetting. If the light illuminates steadily after blinking for approximately one minute, we recommend that you promptly contact a SUBARU dealer to have the system inspected.

- **When a tire is repaired with liquid sealant, the tire pressure warning valve and transmitter may not operate properly. If a liquid sealant is used, we recommend that you contact your nearest SUBARU dealer or other qualified service shop as soon as possible. Make sure to replace the tire pressure warning valve and transmitter when replacing the tire. You may reuse the wheel if there is no damage to it and if the sealant residue is properly cleaned off. If the light illuminates steadily after blinking for approximately one minute, we recommend that you promptly contact a SUBARU dealer to have the system inspected.**

▼ TPMS valve self-registration

When the wheels are replaced (such as when installing snow tires) or when a new TPMS valve is mounted on a new installed wheel, you will need to perform TPMS valve self-registration. Refer to the following procedure to perform TPMS valve self-registration.

1. Install the wheels with TPMS valves on the vehicle.
2. Adjust the tire pressure to the specified value. For information about the specified value of the tire pressure, refer to "Tires" ☞P525.
3. Drive at speeds above 40 km/h (25 mph) for at least 6 km (4 miles) or until the low tire pressure warning light turns off.

NOTE

- **When installing TPMS valves, use only genuine SUBARU parts.**
- **Registration of TPMS valves can also be done at a SUBARU dealer. We recommend that you contact your SUBARU dealer.**

■ Tire Inspection

Check on a daily basis that the tires are free from serious damage, nails, and stones. At the same time, check the tires for abnormal wear.

We recommend that you contact your SUBARU dealer immediately if you find any problem.

NOTE

- **When the wheels and tires strike curbs or are subjected to harsh treatment as when the vehicle is driven on a rough surface, they can suffer damage that cannot be seen with the naked eye. This type of damage does not become evident until time has passed. Try not to drive over curbs, potholes or on other rough surfaces. If doing so is unavoidable, keep the vehicle's speed down to a walking pace or less, and approach the curbs as squarely as possible. Also, make sure the tires are not pressed against the curb when you park the vehicle.**
- **If you feel unusual vibration while driving or find it difficult to steer the vehicle in a straight line, one of the tires and/or wheels may be damaged. We recommend that you drive slowly to the nearest authorized SUBARU dealer and have the vehicle inspected.**

■ Tire Pressures and Wear

Maintaining the correct tire pressures helps to maximize the tires' service lives and is essential for good running performance. Check and, if necessary, adjust the pressure of each tire at least once a month and before any long journey.

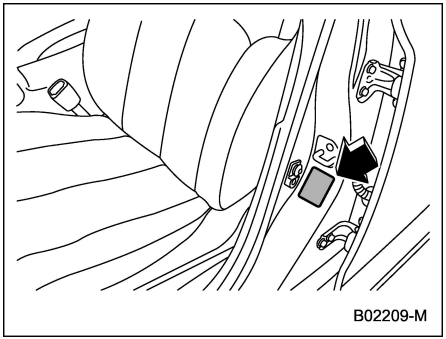

Tire inflation pressure label

Check the tire pressures when the tires are cold. Use a pressure gauge to adjust the tire pressures to the values shown on the tire inflation pressure label. The tire inflation pressure label is located on the door pillar on the driver's side.

Driving even a short distance warms up the tires and increases the tire pressures. Also, the tire pressures are affected by the outside temperature. It is best to check tire pressure outdoors before driving the vehicle.

When a tire becomes warm, the air inside it expands, causing the tire pressure to increase. Be careful not to mistakenly release air from a warm tire to reduce its pressure.

NOTE

- **The air pressure in a tire increases by approximately 30 kPa (0.3 kgf/cm², 4.3 psi) when the tire becomes warm.**
- **The tires are considered cold when the vehicle has been parked for at least 3 hours or has been driven less than 1.6 km (1 mile).**

⚠ WARNING

Do not let air out of warm tires to adjust pressure. Doing so will result in low tire pressure.

Incorrect tire pressures detract from controllability and ride comfort, and they cause the tires to wear abnormally.

- Correctly inflated tires (tread worn evenly)

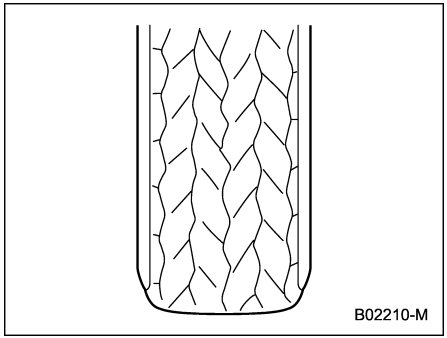

Roadholding is good, and steering is responsive. Rolling resistance is low, so fuel consumption is also lower.

– CONTINUED –

- Under inflated tires (tread worn at shoulders)

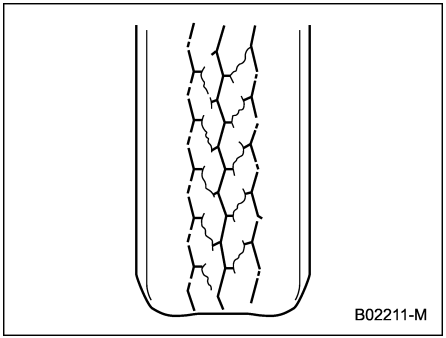

Rolling resistance is high, so fuel consumption is also higher.

- Over inflated tires (tread worn in center)

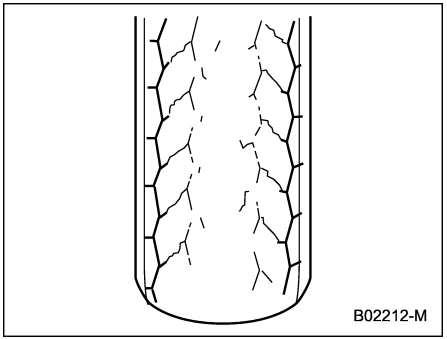

Ride comfort is poor. Also, the tire magnifies the effects of road surface bumps and dips, possibly resulting in vehicle damage.

If the tire inflation pressure label shows tire pressures for the vehicle when fully loaded and for the vehicle when towing a trailer, adjust the tire pressures to the values that match current loading conditions.

WARNING

Driving at high speeds with excessively low tire pressures can cause the tires to deform severely and to rapidly become hot. A sharp increase in temperature could cause tread separation, and destruction of the tires. The resulting loss of vehicle control could lead to an accident.

Wheel Balance

Each wheel was correctly balanced when your vehicle was new, but the wheels will become unbalanced as the tires become worn during use. Wheel imbalance causes the steering wheel to vibrate slightly at certain vehicle speeds and detracts from the vehicle's straight-line stability. It can also cause steering and suspension system problems and abnormal tire wear. If you suspect that the wheels are not correctly balanced, we recommend that you have them checked and adjusted by your SUBARU dealer. Also have them adjusted after tire repairs and after tire rotation.

CAUTION

Loss of correct wheel alignment causes the tires to wear on one side and reduces the vehicle's running stability. We recommend that you contact your SUBARU dealer if you notice abnormal tire wear.

NOTE

The suspension system is designed to hold each wheel at a certain alignment (relative to the other wheels and to the road) for optimum straight-line stability and cornering performance.

■ Wear Indicators

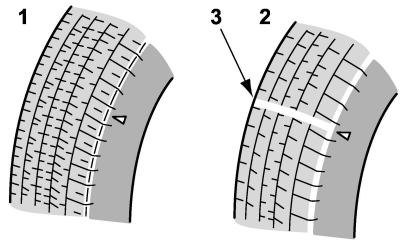

1 New tread
2 Worn tread
3 Tread wear indicator

Each tire incorporates a tread wear indicator, which becomes visible when the depth of the tread grooves decreases to 1.6 mm (0.063 in). A tire must be replaced when the tread wear indicator appears as a solid band across the tread.

⚠ WARNING

When a tire's tread wear indicator becomes visible, the tire is worn beyond the acceptable limit and must be replaced immediately. With a tire in this condition, driving at high speeds in wet weather can cause the vehicle to hydroplane. The resulting loss of vehicle control can lead to an accident.

NOTE

For safety, inspect the tire tread regularly and replace the tires before their tread wear indicators become visible.

■ Rotational Direction of Tires

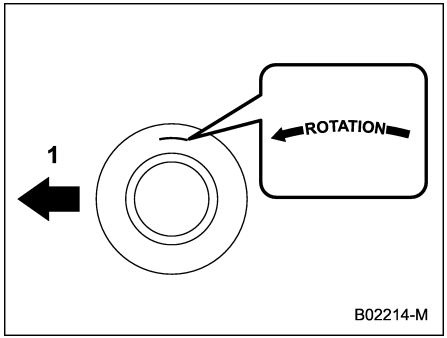

Example of rotational direction marked on the sidewall
1 Front

If the tires have specific rotational direction, refer to the arrow marked on the side wall.

The arrow should be pointing forward direction when the wheels are fitted.

– CONTINUED –

Tire Rotation

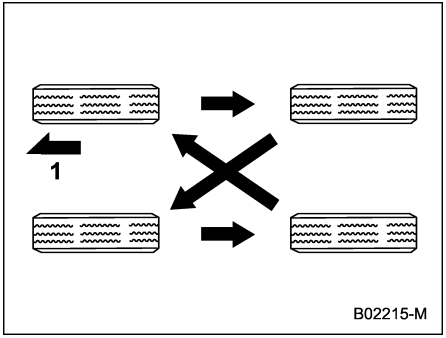

Models with 4 non-unidirectional tires
1 Front

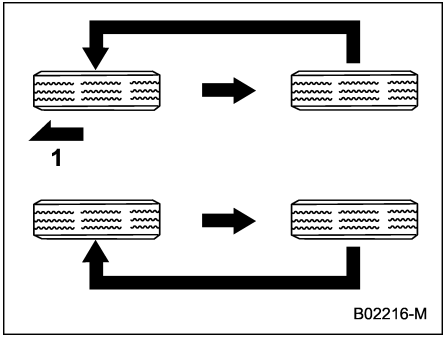

Models with unidirectional tires
1 Front

Tire wear varies from wheel to wheel. To maximize the life of each tire and ensure that the tires wear uniformly, it is best to rotate the tires every 10,000 km (6,000 miles). Move the tires to the positions shown in the illustration each time they are rotated.

Replace any damaged or unevenly worn tire at the time of rotation. After tire rotation, adjust the tire pressures and make sure the wheel nuts are correctly tightened.

After driving approximately 1,000 km (600 miles), check the wheel nuts again and retighten any nut that has become loose.

NOTE

For models with flat tire repair kit, it may be difficult to rotate the tires. We recommend that you have the tires rotated by your SUBARU dealer.

Tire Replacement

The wheels and tires are important and integral parts of your vehicle's design; they cannot be changed arbitrarily. The tires fitted as standard equipment are optimally matched to the characteristics of the vehicle and were selected to give the best possible combination of running performance, ride comfort, and service life. It is essential for every tire to have a size and construction matching those shown on the tire inflation pressure label and to have a speed symbol and load index matching those shown on the tire inflation pressure label.

Using tires of a non-specified size detracts from controllability, ride comfort, braking performance, speedometer accuracy and odometer accuracy. It also creates incorrect body-to-tire clearances and inappropriately changes the vehicle's ground clearance.

All four tires must be the same in terms of manufacturer, brand (tread pattern), construction, and size. You are advised to replace the tires with new ones that are identical to those fitted as standard equipment.

For safe vehicle operation, SUBARU recommends replacing all four tires at the same time.

⚠ WARNING

- **When replacing or installing tire(s), all four tires must be the same for the following items.**
  (a) Size
  (b) Speed symbol

(c) Load index

(d) Circumference

(e) Construction

(f) Manufacturer

(g) Brand (tread pattern)

(h) Degrees of wear

For items (a) to (c), you must obey the specification that is printed on the tire inflation pressure label. The tire inflation pressure label is located on the driver's door pillar.

If all four tires are not the same in items (a) to (h), serious mechanical damage could be caused to the drivetrain of the car, and affect the followings.

– Ride
– Handling
– Braking
– Speedometer/Odometer calibration
– Clearance between the body and the tires

It also may be dangerous and lead to loss of vehicle control, and it can lead to an accident.

- Use only radial tires. Do not use radial tires together with belted bias tires and/or bias-ply tires. Doing so can dangerously reduce controllability, resulting in an accident.

▼ Replacement procedure

WARNING

- Use only the jack and the jack handle provided with your vehicle. The jack supplied with the vehicle is designed only for changing a tire. Never put any part of your body under the vehicle while the vehicle is being supported by the jack. Doing so could result in serious injury or death.
- Do not jack up the vehicle on an incline or a loose road surface. The jack can come out of the jacking point or sink into the ground and this can result in serious injury or death.
- Before jacking up the vehicle, be sure that there are no occupants or cargo on board.
- Do not jack up the vehicle with an object on or underneath the jack. The jack can be unstable and this can result in a severe accident.
- Always turn off the e-BOXER system before raising the flat tire off the ground using the jack. Never swing or push the vehicle supported with the jack. The jack can come out of the jacking point due to a jolt and this can result in serious injury or death.
- All passengers must exit the vehicle before you raise it with the jack. Raising the vehicle with someone inside of it could result in serious injury or death.
- Do not start the vehicle while it is supported by the jack. Doing so could result in serious injury or death.

CAUTION

Do not hit and bend the disc rotor backing plate when removing and installing the tire. A bent backing plate may scrape against the disc rotor and cause noise while the vehicle is in motion.

– CONTINUED –

▽ **Australia and New Zealand models**

⚠ WARNING

For Australia and New Zealand, the following instructions are supplied by the Australian/New Zealand Standard™ (AS/NZS 2693:2007). Be sure to obey the following instructions for your safety.

- **That the jack should be used on level firm ground wherever possible.**
- **That it is recommended that the wheels of the vehicle be chocked, and that no person should remain in a vehicle that is being jacked.**
- **That no person should place any portion of their body under a vehicle that is supported by a jack.**

NOTE

We recommend that you contact a SUBARU dealer when jacking up the vehicle using a garage jack.

1. Park on a hard, level surface, whenever possible, then stop the e-BOXER system.
2. Apply the parking brake and place the select lever in the “P” position.
3. Turn on the hazard warning flasher and unload all occupants and luggage from the vehicle.
4. Put wheel blocks at the front and rear of the tire diagonally opposite the tire to be replaced.

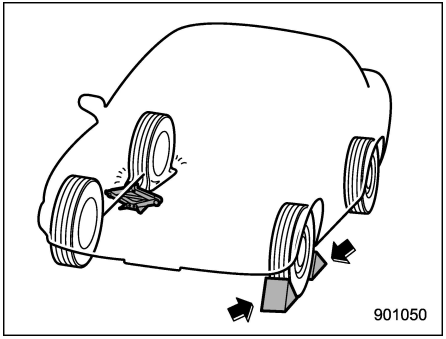

5. Take out the jack, jack handle and wheel nut wrench.

The tools are stored under the floor of the cargo area and under the driver’s seat. Refer to “Maintenance Tools” ☞P428.

NOTE

Make sure that the jack is well lubricated before using it.

6. Loosen the wheel nuts using the wheel nut wrench but do not remove the nuts.

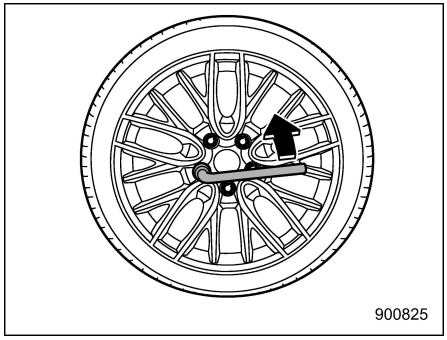

7. Place the jack under the side sill at the front or rear jack-up point closest to the tire to be replaced.

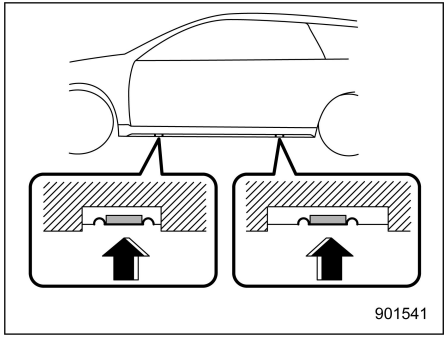

8. Turn the jackscrew by hand until the jack head engages firmly into the jack-up point.

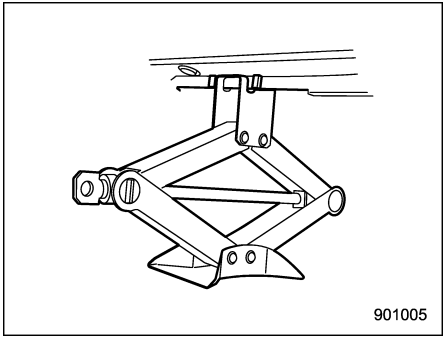

9. Insert the jack handle into the hole of the wheel nut wrench.

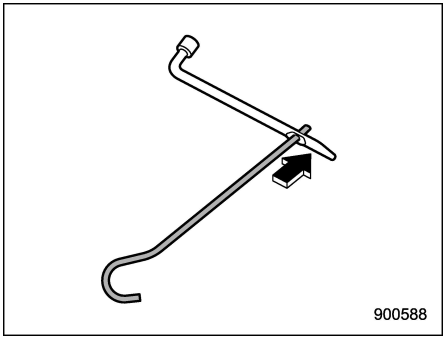

10. Insert the jack handle into the jack-screw, and turn the handle until the tire clears the ground. Do not raise the vehicle higher than necessary.

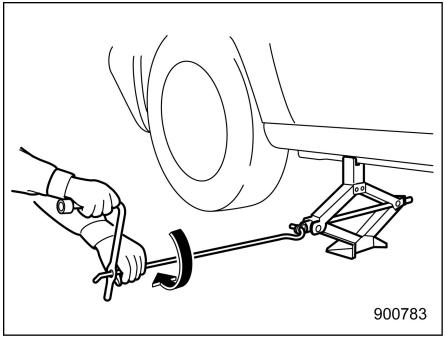

11. Remove the wheel nuts and the tire to be replaced.
12. Before putting the new tire on, clean the mounting surface of the wheel and hub with a cloth.

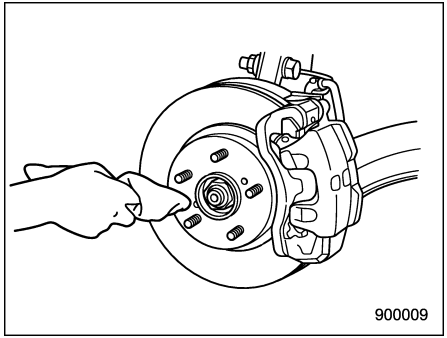

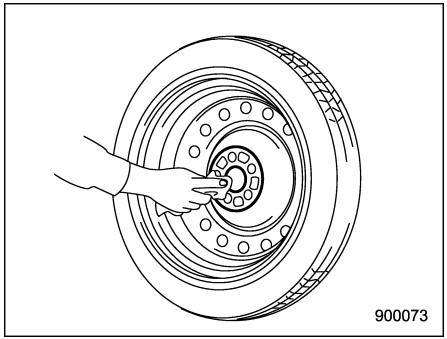

– CONTINUED –

13. Put on the new tire. Replace the wheel nuts. Tighten them by hand.

WARNING

Do not use oil or grease on the wheel studs or nuts when the new tire is installed. This could cause the nuts to become loose and lead to an accident.

14. Turn the jack handle counterclockwise to lower the vehicle.
15. Use the wheel nut wrench to securely tighten the wheel nuts to the specified torque, following the tightening order in the illustration.

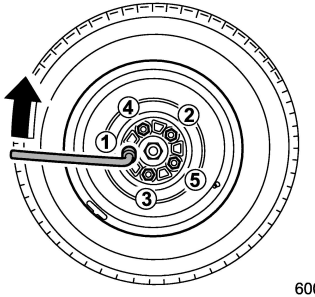

600192

NOTE

For the wheel nut tightening torque, refer to "Tires" ☞P525. Never use your foot on the wheel nut wrench or a pipe extension on the wrench because you may exceed the specified torque. Have the wheel nut torque checked at the nearest automotive service facility.

16. Store the jack, jack handle and wheel nut wrench in their storage locations.

WARNING

Never place a tire or tire changing tools in the passenger compartment after changing wheels. In a sudden stop or collision, loose equipment could strike occupants and cause injury. Store the tire and all tools in the proper place.

■ Wheel Replacement

When replacing wheels due, for example, to damage, make sure the replacement wheels match the specifications of the wheels that are fitted as standard equipment. Replacement wheels are available from SUBARU dealers.

WARNING

Use only those wheels that are specified for your vehicle. Wheels not meeting specifications could interfere with brake caliper operation and may cause the tires to rub against the wheel well housing during turns. The resulting loss of vehicle control could lead to an accident.

NOTE

When any of the wheels are removed and replaced for tire rotation or to change a flat tire, always check the tightness of the wheel nuts after driving approximately 1,000 km (600 miles). If any nut is loose, tighten it to the specified torque.

11-17. Alloy Wheels

Alloy wheels can be scratched and damaged easily. Handle them carefully to maintain their appearance, performance, and safety.

- When any of the wheels is removed and replaced for tire rotation or to change a flat, always check the tightness of the wheel nuts after driving approximately 1,000 km (600 miles). If any nut is loose, tighten it to the specified torque.
- Never apply oil to the threaded parts, wheel nuts, or tapered surface of the wheel.
- Never let the wheel rub against sharp protrusions or curbs.
- Be sure to fit tire chains on uniformly and completely around the tire, otherwise the chains may scratch the wheel.
- When wheel nuts, balance weights, or the center cap is replaced, be sure to replace them with genuine SUBARU parts designed for alloy wheels.
- When stacking and storing removed tires, place shock-absorbing material between the tires to protect the wheels from becoming scratched.

11-18. Windshield Washer Fluid

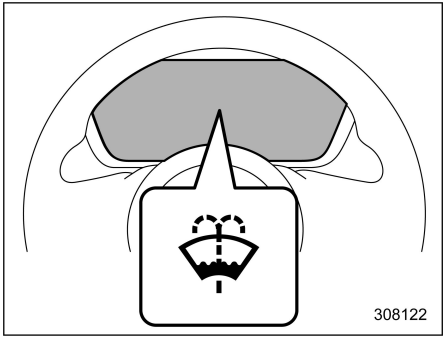

Windshield washer fluid warning light

When there is only a small amount of washer fluid remaining, the windshield washer fluid warning light will appear. When this occurs, refill the washer fluid as follows.

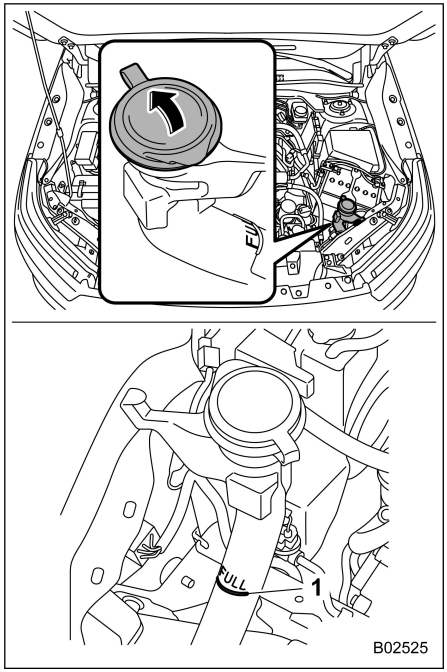

1 “FULL” mark

Remove the washer fluid tank filler cap, then add fluid until it reaches the “FULL” mark on the tank.

Use windshield washer fluid. If windshield washer fluid is unavailable use clean

– CONTINUED –

water.

In areas where water freezes in winter, use an anti-freeze type windshield washer fluid.

CAUTION

Never use engine coolant as washer fluid because it could cause paint damage.

If you fill the washer fluid tank with a fluid with a different concentration from the one used previously, purge the old fluid from the piping between the washer fluid tank and washer nozzles by operating the washer for a certain period of time. Otherwise, if the concentration of the fluid remaining in the piping is too low for the outside temperature, it may freeze and block the nozzles.

CAUTION

- **Adjust the washer fluid concentration appropriately for the outside temperature. If the concentration is inappropriate, sprayed washer fluid may freeze on the windshield and obstruct your view, and the fluid may freeze in the washer fluid tank.**
- **Be careful foreign matter does not contaminate the washer fluid when filling the tank. Contamination could cause malfunctions, such as clogging the pump.**
- **State or local regulations on volatile organic compounds may restrict the use of methanol, a common windshield washer anti-freeze additive. Washer fluids containing non-methanol anti-freeze agents should be used only if they provide cold weather protection without damaging your vehicle's paint, wiper blades or washer system.**

11-19. Replacement of Wiper Blades

Grease, wax, insects, or other material on the windshield or the wiper blade results in jerky wiper operation and streaking on the glass. If you cannot remove the streaks after operating the windshield washer or if the wiper operation is jerky, clean the outer surface of the windshield and rear window using a sponge or soft cloth with a neutral detergent or mild-abrasive cleaner. Do not, however, use detergent to clean the blade rubbers. Use only a sponge or soft cloth (and no neutral detergent or mild abrasive cleaner) when you clean the blade rubbers. If you wipe the rubber of the blade strongly, the black coating component will peel off, which will cause the wiper to judder. Also, after wiping it off, check that the rubber has not come loose. After cleaning the window glass and wiper blade rubbers, be sure to rinse them with clean water. Rinse the window until the water does not form beads on the glass. This indicates that the glass is clean.

CAUTION

- **Do not clean the wiper blades with fuel or a solvent, such as paint thinner or benzine. This will**

cause deterioration of the wiper blades.

- **When you wish to raise the passenger-side wiper arm, first raise the driver-side wiper arm. Otherwise, the passenger-side wiper assembly and driver-side wiper assembly will touch each other, possibly resulting in scratches.**
- **Return the passenger-side wiper arm to its original position before returning the driver-side wiper arm to its original position. Otherwise, the passenger-side wiper assembly and driver-side wiper assembly will touch each other, possibly resulting in scratches.**
- **When returning the raised wipers to the original positions, return the wipers slowly on the windshield by hand. Returning the wipers from the detached positions by the spring operation might change the shape of the wiper arm or scratch the windshield.**
- **While removing the wiper blades from the wiper arms, do not return the wiper arms to the original positions. Otherwise, the windshield surface may be scratched.**

If you cannot eliminate the streaking even after following this method, replace the wiper blades using the following procedures.

■ Windshield Wiper Blade Assembly

NOTE

Do not lower the wiper arm while the wiper blade assembly is removed.

1. Raise the wiper arm off the windshield. First raise the driver's side wiper arm and then raise the front passenger's side wiper arm.

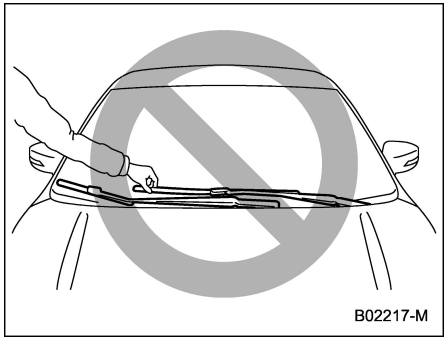

⚠ CAUTION

Hold the wiper arm when replacing the wiper blade. Holding the wiper blade, may result in blade deformation.

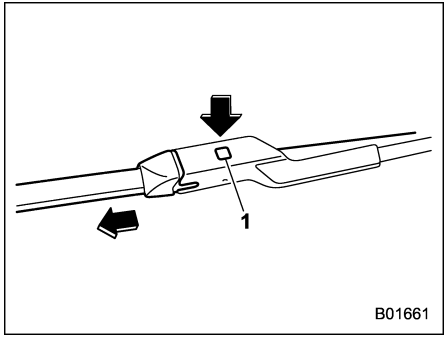

1 Lock knob

2. Hold the wiper blade connection by hand, push the lock knob to release the lock, and then pull out the wiper blade assembly.

NOTE

Do not use a hard object to push the lock knob. The lock knob may be scratched.

– CONTINUED –

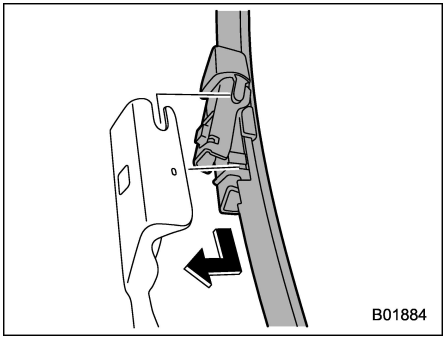

3. When installing the wiper blade assembly, align it with the wiper arm connection part and then slide it in the opposite direction of removal to install. After installing the wiper blade assembly, check that the connection part is locked completely.
4. Hold the wiper arm by hand and slowly lower it in position.

■ Window Wiper Blade Rubber

Replace the wiper blade rubber according to the following procedure.

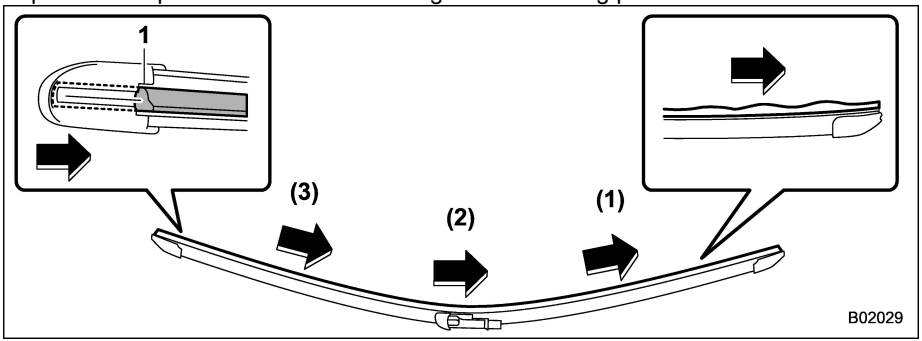

1 Slit

1. Pull the wiper blade rubber from the right side in the order of (1), (2) and (3) until the slit on the wiper blade can be seen position.

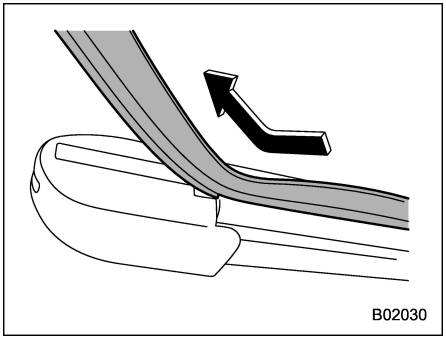

2. Pull the end of the wiper blade rubber through the slit to remove it.

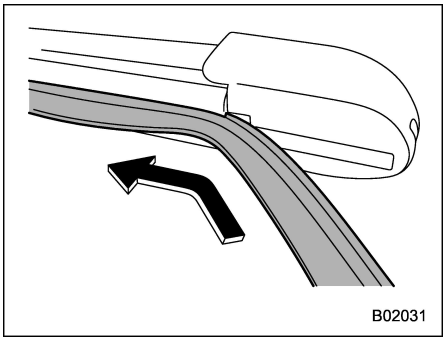

3. Insert a new wiper blade rubber into the slit. Do not insert the wiper blade rubber into the wrong slit.

Rear Window Wiper Blade Assembly

1. Raise the wiper arm off the rear window.

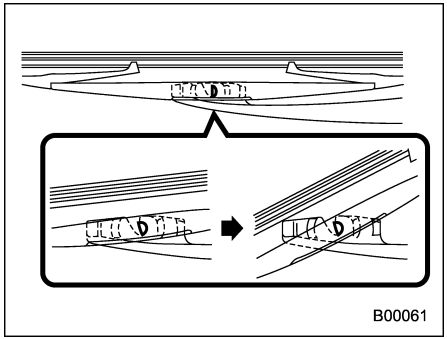

2. Turn the wiper blade assembly counterclockwise.

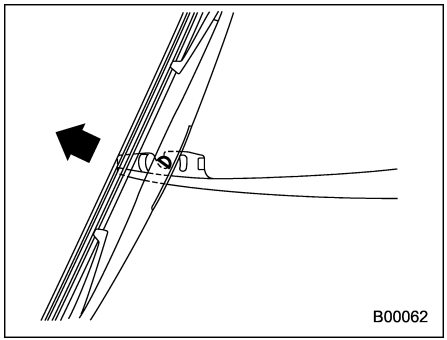

3. Pull the wiper blade assembly toward you to remove it from the wiper arm.

Rear Window Wiper Blade Rubber

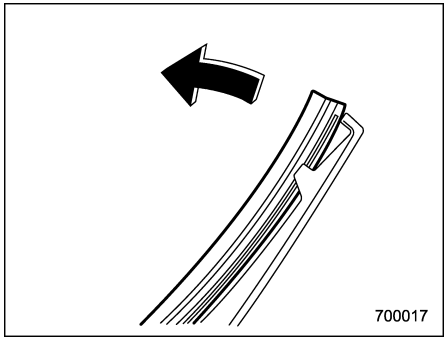

1. Pull out the end of the blade rubber assembly to unlock it from the plastic support.

– CONTINUED –

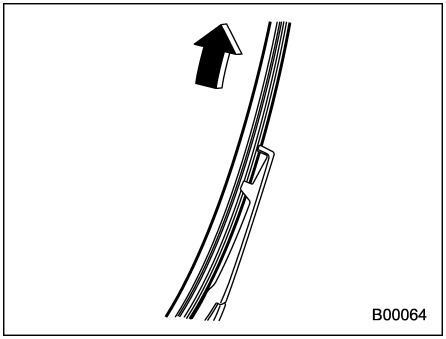

2. Pull the blade rubber assembly out of the plastic support.

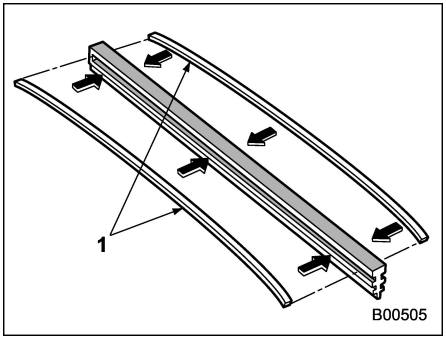

1 Metal spines

3. If the new blade rubber is not provided with two metal spines, remove the metal spines from the old blade rubber and install them in the new blade rubber.

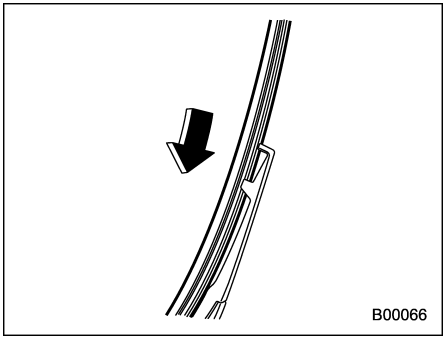

4. Align the claws of the plastic support with the grooves in the blade rubber assembly, then slide the blade rubber assembly into place.

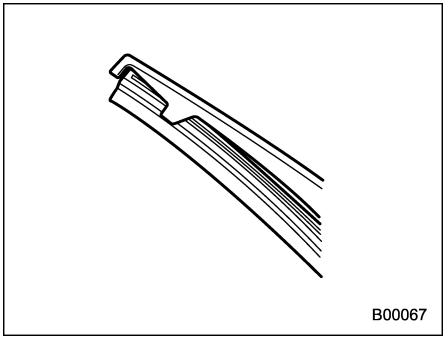

Securely retain both ends of the rubber with the stoppers on the plastic support ends. If the rubber is not retained properly, the wiper may scratch the rear window glass.

5. Install the wiper blade assembly to the wiper arm. Make sure that it locks in place.
6. Hold the wiper arm by hand and slowly lower it in position.

11-20. Battery

■ Battery Precautions!

WARNING

Read these instructions carefully:

To ensure safe and correct handling of your battery, read the following precautions carefully before using the battery or inspecting it.

Wear eye protection:

Always wear eye protection when working near your vehicle's battery. Battery fluid contains sulfuric acid, so it can cause blindness if splashed into your eyes. Also, batteries emit highly flammable, explosive hydrogen gas. Eye protection is vital for protection in the event that this gas ignites.

Battery fluid contains sulfuric acid:

Since battery fluid contains sulfuric acid, be sure to wear eye protection and protective gloves when inspecting your vehicle's battery. Avoid tipping the battery and subjecting it to shocks since this could cause fluid to spill.

Under no circumstances allow battery fluid to make contact with your skin, eyes, or clothing since this can cause blindness and burns. If battery fluid splashes onto your skin, eyes or clothing, wash it away immediately with plenty of water. If battery fluid splashes into your eyes, seek medical attention immediately.

If battery fluid is accidentally swallowed, immediately drink a large amount of milk or water, and seek medical attention immediately.

Battery fluid is corrosive. If it splashes onto your vehicle's paintwork or fabrics, wash it away immediately with plenty of water.

Keep children away:

Batteries must be handled only by persons who are aware of the potential hazards. Take particular care to keep children away from your vehicle's battery. Improper handling can cause blindness and burns.

Keep flames away:

Before working on or near your vehicle's battery, extinguish all cigarettes, matches, and lighters. Also, keep the battery away from flammable items and electrical sparks. Since batteries emit highly flammable, explosive hydrogen gas, any flames or sparks in the vicinity could cause an explosion.

When working near your vehicle's battery, take care that metal tools do not short-circuit the battery's (+) and (−) terminals or connect the battery's (+) terminal to the vehicle's body. A short circuit could create electrical sparks and lead to an explosion.

– CONTINUED –

To prevent electrical sparks, all rings, wristwatches, and other metal accessories must be taken off before work is carried out on or near the battery.

Prevent explosions:

While being charged, batteries emit highly flammable, explosive hydrogen gas. To prevent an explosion, charge your vehicle's battery in a well ventilated area and keep flames away.

CAUTION

Never use more than 10 amperes when charging the battery because it will shorten battery life.

NOTE

To avoid battery drain, do not use electric power (e.g., lights, wipers, climate control, seat heaters, etc.) for longer than necessary when the engine is off. If using the radio, room lights or other electrical equipment with the engine off, even if the ignition switch is in the "ACC" position, the battery will drain.

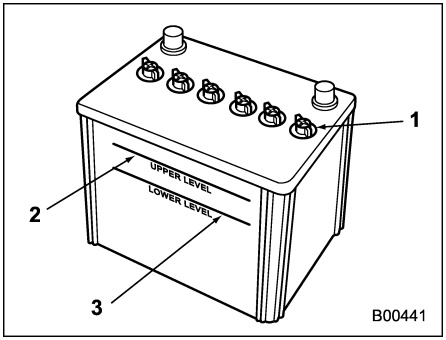

1 Cap
2 Upper level
3 Lower level

It is unnecessary to periodically check the battery fluid level or periodically refill with distilled water.

However, if the battery fluid level is below the lower level, remove the cap. Fill to the upper level with distilled water.

■ High Voltage Battery

The operation of the engine and regenerative brakes charges the high voltage battery. Because of this, you do not have to charge the high voltage battery from an outside source.

However, in order to maintain the battery in good condition, drive the vehicle at least once every 2 to 3 months for at least 30 minutes or 16 km (10 miles). If you leave the vehicle for a long time, the battery may discharge.

11-21. Fuses

CAUTION

Never replace a fuse with one having a higher rating or with material other than a fuse because serious damage or a fire could result.

NOTE

Fuse rating and used circuit are described on behind each fuse box cover.

The fuses are designed to melt during an overload to prevent damage to the wiring harness and electrical equipment. The fuses are located in two fuse boxes.

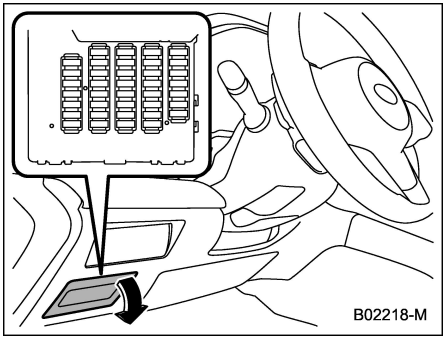

One is located under the instrument panel behind the fuse box cover on the driver's seat side. To remove the cover, pull it out.

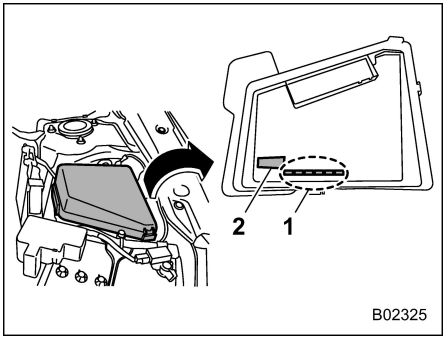

1 Spare fuses
2 Fuse puller

The other one (main fuse box) is housed in the engine compartment. Also, the spare fuses and fuse puller are stored in the fuse box cover.

Pinch the upper part of the fuse puller when removing it from the main fuse box.

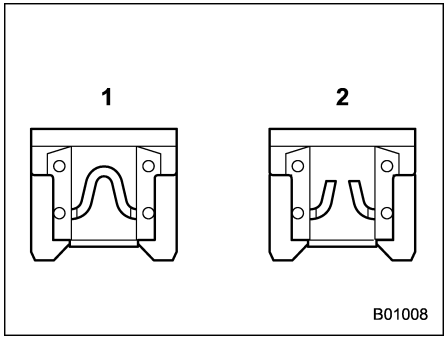

1 Good
2 Blown

If any lights, accessories or other electrical controls do not operate, inspect the corresponding fuse. If a fuse has blown, replace it.

1. Turn the ignition switch to the "OFF" position and turn off all electrical accessories.
2. Remove the fuse box cover.
3. Determine which fuse may be blown. Look at the back side of each fuse box cover.

– CONTINUED –

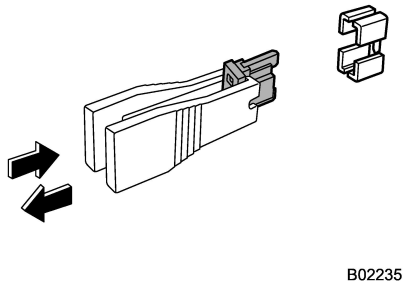

4. Pull out the fuse with the fuse puller.
5. Inspect the fuse. If it has blown, replace it with a spare fuse of the same rating.
6. If the same fuse blows again, this indicates that its system has a problem. We recommend that you contact your SUBARU dealer for repairs.

11-22. Installation of Accessories

We recommend that you always consult your SUBARU dealer before installing fog lights or any other electrical equipment in your vehicle. Such accessories may cause the electronic system to malfunction if they are incorrectly installed or if they are not suited for the vehicle. We recommend that you install only genuine SUBARU accessories on your vehicle.

Also, we recommend that you always consult your SUBARU dealer before installing a radio in your vehicle.

11-23. Replacing Bulbs

WARNING

Bulbs may become very hot while illuminated. Before replacing bulbs, turn off the lights and wait until the bulbs cool down, Otherwise, there is the risk of sustaining a burn injury.

CAUTION

Replace any bulb only with a new bulb of the specified wattage. Using a bulb of different wattage could result in a fire. For the specified wattage of each bulb, refer to "Bulb Chart" ☞P527. For replacement, we recommend that you contact your SUBARU dealer.

Do not touch the glass portion of the light bulb with bare hands. When holding the glass portion is unavoidable, hold it with a clean dry cloth to avoid getting moisture and grease on the bulb. If there are any fingerprints or grease on the bulb surface, wipe them away with a soft cloth moistened with alcohol. Also, if the bulb is scratched or dropped, it may

blow out or crack.

Headlights

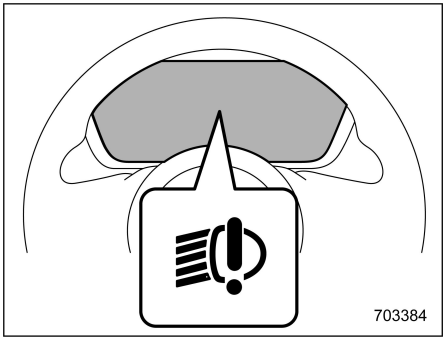

The LED headlight warning light illuminates if the LED headlights malfunction.

We recommend that you have your vehicle inspected at a SUBARU dealer as soon as possible.

Rear Turn Signal Lights

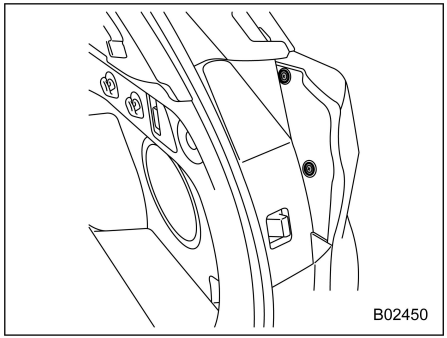

1. Use a screwdriver to remove the secured clips of the covers.

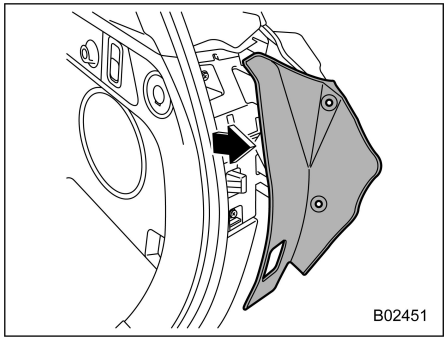

2. Remove the side cover.

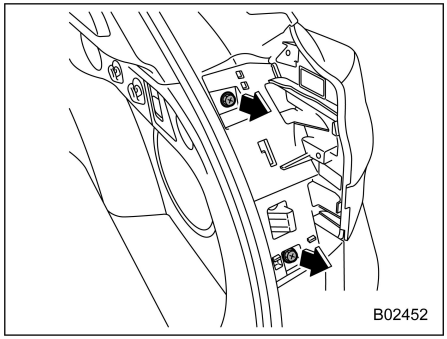

3. Remove the upper and lower screws.

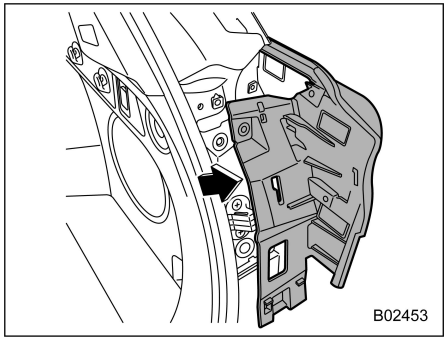

4. Slide the rear combination light assembly rearward to remove it from the vehicle.

– CONTINUED –

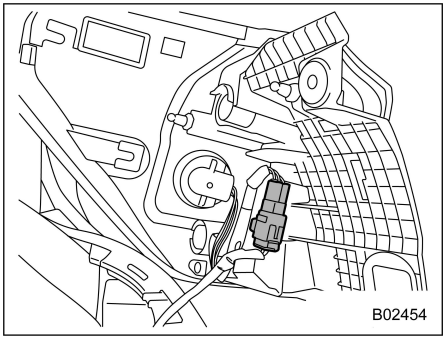

5. Disconnect the electrical connector.

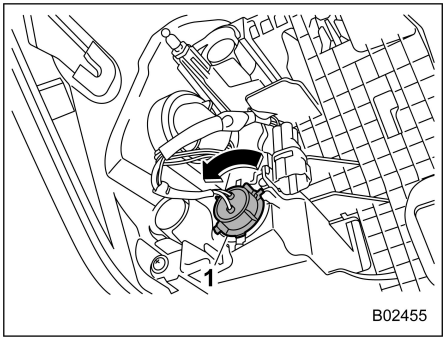

1 Rear turn signal light

6. Remove the bulb holder from the rear combination light assembly by turning it counterclockwise.
7. Pull the bulb out of the bulb holder and replace it with a new one.
8. Set the bulb holder into the rear combination light assembly and turn it clockwise until it locks.
9. Reconnect the electrical connector.

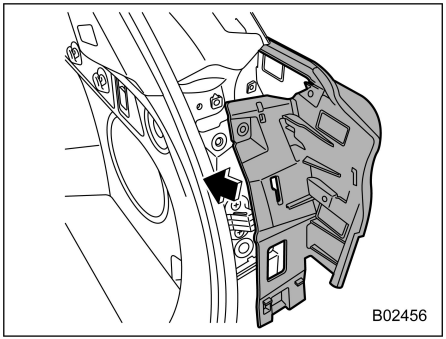

10. Reinstall the rear combination light assembly by sliding the two-pronged part of the combination light assembly securely to each holder of the vehicle side.
11. Tighten the upper and lower screws.
12. Reinstall the side cover.

■ Other Bulbs

It may be difficult to replace the bulbs. We recommend that you have the bulbs replaced by your SUBARU dealer if necessary.

11-24. Replacing Battery

The access key fob battery may be discharged under the following conditions.

- The operation of the keyless access function is unstable.
- The operating distance of the remote keyless entry system is unstable.
- The transmitter does not operate properly when used within the standard distance.

Replace the battery with a new one.

WARNING

Do not ingest the battery, Chemical Burn Hazard

(The remote control supplied with) This product contains a coin/button cell battery. If the coin/button cell battery is swallowed, it can cause severe internal burns in just 2 hours and can lead to death.

Keep new and used batteries away from children.

If the battery compartment does not close securely, stop using the product and keep it away from children.

If you think batteries might have been swallowed or placed inside any part of the body, seek immediate medical attention.

CAUTION

This symbol is intended to alert the user to the presence of important operating and maintenance (servicing) instructions in the literature accompanying the appliance.

- **Do not let dust, oil or water get on or in the access key fob/transmitter when replacing battery.**
- **Before replacing the battery, remove any static electricity.**
- **Be careful not to touch or damage the printed circuit board in the access key fob/transmitter when replacing the battery.**
- **Be careful not to allow children to touch the battery and any removed parts; children could swallow them.**
- **Danger of explosion if battery is incorrectly replaced. Replace only with the same or equivalent type.**
- **Do not exposed to excessive heat such as sunshine, fire or the like.**

NOTE

- **Replace only with the same or equivalent type of battery recommended by the manufacturer.**
- **Dispose of used batteries according to the local laws.**
- **Mount the battery in the correct orientation to prevent fluid leakage. Be careful not to bend the terminals. It may result in a malfunction.**
- **It is recommended that the battery should be replaced by a SUBARU dealer.**
- **Use a new battery.**
- **After replacing the battery, confirm that the access key fob/transmitter functions properly.**

– CONTINUED –

■ Replacing Battery of Access Key Fob

CAUTION

- **The battery is hazardous and is to be kept away from children (whether the battery is new or used).**
- **The battery can cause severe or fatal injuries in 2 hours or less if it is swallowed or placed inside any part of the body.**
- **Medical attention should be sought immediately if it is suspected the battery has been swallowed or placed inside any part of the body.**
- **When removing or reinstalling the access key fob cover, make sure that the plastic part does not come off or become misaligned.**
- **Before replacing the battery remove any static electricity.**

Battery: Button battery CR2032 or equivalent

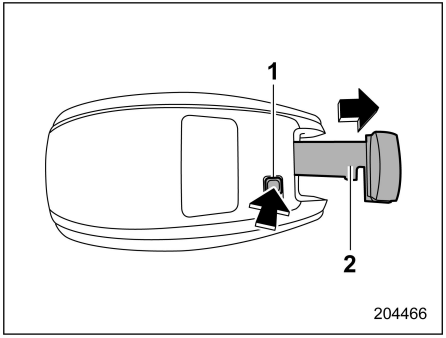

1 Release button
2 Emergency key

1. Take out the emergency key.

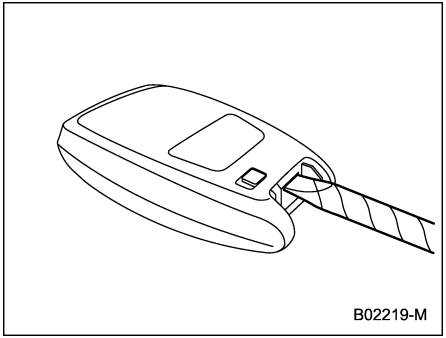

2. Wrap a flat-head screwdriver with vinyl tape or a cloth, and insert it in the gap to remove the cover.

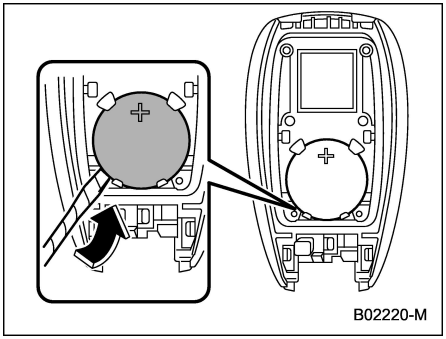

3. Take out the battery using a flat-head screwdriver with vinyl tape or a cloth.

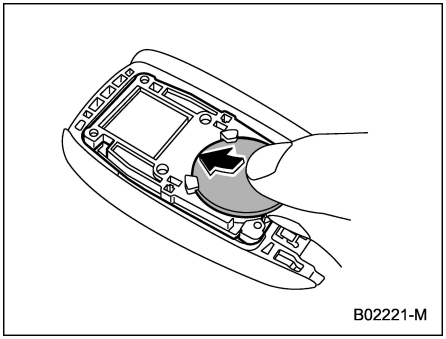

4. Insert a new battery with its positive (+) side facing upward as shown in the figure.

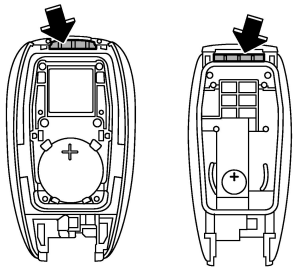

5. Attach the cover to the access key fob by fitting the projections and recesses together.

■ The Safe Disposal of Button Batteries

Please, safely dispose of button batteries immediately.

As soon as you have finished using a button battery put sticky tape around both sides of the battery. This will make them less attractive to children and to avoid the low risk of them catching fire. Then dispose of them immediately in an outside bin, out of reach of children, or recycle safely.

12-1. Specifications 518
Dimensions 518
Engine 518
Electric Motor (Traction Motor) 519
High Voltage Battery 519
Fuel 520
Engine Oil 521
Front Differential and Rear Differential Gear Oil ... 523
Fluids 524
Engine Coolant 524
Inverter with Converter Assembly Coolant 524
Electrical System 525
Tires 525
Brake Disc 525
Radio Wave Devices 526
12-2. Bulb Chart 527
Safety Precautions 527
Bulb Chart 528
12-3. Vehicle Identification 530
12-4. Function Settings 531
Function Settings and Adjustments on the Center Information Display 531
Function Settings and Adjustments Performed by a Dealer 531

12-1. Specifications

The following specifications are subject to change without notice.

■ Dimensions

mm (in)

Overall length			4,655 (183.3)
Overall width			1,830 (72.0)
Overall height			1,730 (68.1)
Wheel base			2,670 (105.1)
Tread	Models with 18-inch wheel tires	Front	1,565 (61.6)
		Rear	1,570 (61.8)
	Models with 19-inch wheel tires	Front	1,570 (61.8)
		Rear	1,575 (62.0)
Ground clearance*1			220 (8.7)

*1: Measured with vehicle empty

■ Engine

Engine model	FB25 (2.5 L, DOHC, non-turbo)
Engine type	Horizontally opposed, liquid cooled 4 cylinder, 4-stroke direct injection petrol engine
Displacement cc	2,498
Bore × Stroke mm (in)	94.0 × 90.0 (3.70 × 3.54)
Compression ratio	12.0
Firing order	1 – 3 – 2 – 4

■ Electric Motor (Traction Motor)

Type	Permanent magnet synchronous motor
Maximum output	90 kW
Maximum torque	276 N·m (28.1 kgf·m, 203.6 lbf·ft)

■ High Voltage Battery

Type	Lithium-ion battery
Voltage	3.7 V/cell
Capacity	4.3 Ah
Quantity	70 cells
Overall voltage	259 V

– CONTINUED –

■ Fuel

Fuel requirements*			Fuel tank capacity
For Australia	Fuel type	Unleaded petrol	63 liters (16.6 US gal, 13.9 Imp gal)
	Research Octane Number (RON)	91 or higher	
	Ethanol content in fuel	Up to 10%.	
For Europe	Fuel type	Unleaded petrol	
	Research Octane Number (RON)	95 or higher	
	Ethanol content in fuel	Up to 10% or E5, E10 labeled fuel	
For other areas	Fuel type	Unleaded petrol	
	Research Octane Number (RON)	95 or higher	
	Ethanol content in fuel	Up to 15%.	

*: For details, refer to “Fuel” ☞P313.

■ Engine Oil

For the checking, adding and replacing procedure or other details, refer to “Engine Oil” ☞P478.

NOTE

The procedure for changing the engine oil and oil filter should be performed by a properly-trained expert. It is recommended that you have this service performed by your SUBARU dealer.

▼ Approved engine oil

Always use the SUBARU approved engine oil. For further details, we recommend that you contact your SUBARU dealer. If the approved engine oil is unavailable, use the alternative engine oil described in the following.

▼ Alternative engine oil

If the SUBARU approved oil is unavailable, the following alternative oil can be used.

NOTE

- **Each quantity indicated here is only a guideline. The necessary quantity for replacement may differ slightly depending on the temperature and other factors.**
- **Availability of engine oil products in the market is dependent on country and region.**

– CONTINUED –

Oil grade		SAE viscosity No. and applicable temperature	Engine oil capacity
	ILSAC (International Lubricant Specification Advisory Committee) **GF-6B**, which can be identified with the ILSAC certification mark (Shield mark)	· 0W-16* · 0W-20 · 5W-20 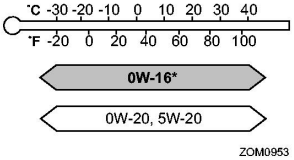 *: Equivalent to factory-filled oil	– Adding the oil from L to F level: 1.0 liters (1.1 US qt, 0.9 Imp qt) – Changing the oil and oil filter: 4.4 liters (4.7 US qt, 3.9 Imp qt)
	ILSAC **GF-5** or **GF-6A** which can be identified with the ILSAC certification mark (Starburst mark)		
	API classification **SN** with the words “RESOURCE CONSERVING”, **SN PLUS** with the words “RESOURCE CONSERVING” or **SP** with the words “RESOURCE CONSERVING”		
	ACEA specification A3 or A5		

■ Front Differential and Rear Differential Gear Oil

Oil	Front differential gear oil
Oil grade	● SUBARU Extra MT*3 ● API classification GL-5 (75W-90)
Oil capacity*1	1.3 liters (1.4 US qt, 1.1 Imp qt)
Remarks*2	"Front Differential Gear Oil and Rear Differential Gear Oil" ☞P487

*1: The indicated oil quantity is only a guideline. The necessary quantity for replacement may differ slightly depending on the temperature and other factors. After refilling the gearbox with oil, the oil level should be checked.
*2: For more details about maintenance and service, refer to the indicated section.
*3: Equivalent to factory-filled oil.

Oil	Rear differential gear oil
Oil grade	API classification GL-5 (75W-90)
Oil capacity*1	0.8 liters (0.8 US qt, 0.7 Imp qt)
Remarks*2	"Front Differential Gear Oil and Rear Differential Gear Oil" ☞P487

*1: The indicated oil quantity is only a guideline. The necessary quantity for replacement may differ slightly depending on the temperature and other factors. After refilling the gearbox with oil, the oil level should be checked.
*2: For more details about maintenance and service, refer to the indicated section.

– CONTINUED –

■ Fluids

Fluid	Fluid type*1	Fluid capacity*2	Remarks*3
Continuously variable transmission fluid	We recommend that you consult your SUBARU dealer.	5.9 liters (6.2 US qt, 5.2 Imp qt)	“Continuously Variable Transmission Fluid” ☞P487
Brake fluid	FMVSS No. 116, DOT 3 or DOT 4 brake fluid	—	“Brake Fluid” ☞P488

*1: Use one of the indicated types of fluid.
*2: The indicated fluid quantity is only a guideline. The necessary quantity for replacement may differ slightly depending on the temperature and other factors.
*3: For more details about maintenance and service, refer to the indicated section.

■ Engine Coolant

Coolant capacity	Coolant type
8.0 liters (8.5 US qt, 7.0 Imp qt)	● SUBARU SUPER COOLANT* ● Equivalent coolant (non-amine type coolant)

*: Equivalent to factory-filled coolant.
The indicated coolant quantity is only a guideline. The necessary quantity for replacement may differ slightly depending on the temperature and other factors. For more details about maintenance and service, refer to “Cooling System” ☞P481.

■ Inverter with Converter Assembly Coolant

Coolant capacity	Coolant type
1.9 liters (2.0 US qt, 1.7 Imp qt)	● SUBARU SUPER COOLANT* ● Equivalent coolant (non-amine type coolant)

*: Equivalent to factory-filled coolant.
The indicated coolant quantity is only a guideline. The necessary quantity for replacement may differ slightly depending on the temperature and other factors. For more details about maintenance and service, refer to “Cooling System” ☞P481.

■ Electrical System

Battery type	75D23L
Spark plugs	DILKAR7Q8 (NGK)

■ Tires

For the tire specifications (e.g., tire size, load index and speed category), see the tire pressure label located on the door pillar on the driver's side. When towing, always follow the recommended tire pressure that is specified on the label.

Wheel nut tightening torque	120 N·m (12 kgf·m, 89 lbf·ft)*1*2

*1: This torque is equivalent to applying approximately 40 to 50 kgf (88 to 110 lbf) at the end of the wheel nut wrench. If you have tightened the wheel nuts by yourself, have the tightening torque checked at the nearest automotive service facility as soon as possible.
*2: For the wheel nut tightening procedure, refer to "Replacement procedure" ☞P497.

■ Brake Disc

If you need information on the usage limit value of brake discs and the method for measuring them, we recommend that you consult your SUBARU dealer.

– CONTINUED –

■ Radio Wave Devices

Radio frequency transmitters	Frequency bands	Maximum output power	Antenna position at vehicle, specific conditions for installation and/or use
Access key fob (keyless access with push-button start system)	433.92 (MHz)	0.022 (mW)	Access key fob
Push-button ignition switch (keyless access with push-button start system)	134.2 (kHz)	0.0033 (mW)	Push-button ignition switch
Interior antennas (keyless access with push-button start system)	134.2 (kHz)	0.95 (mW)	Inside of the console Under the rear seat Under the luggage compartment
Exterior antenna (keyless access with push-button start system)	134.2 (kHz)	7.38 (mW)	Inside of the rear gate
TPMS (tire pressure monitoring system) valves	433.92 (MHz)	350 (μW)	Inside of the tire with valve
Radar sensors for Front Cross Traffic Information/Front Cross Traffic Braking	76 to 77 (GHz)	0.015 (W)	Inside of the front bumper
Radar sensors for Subaru Rear Vehicle Detection (SRVD)	24.05 to 24.25 (GHz)	0.0186 (W)	Inside of the rear bumper
Telematics	824 to 849 (MHz) 880 to 915 (MHz) 1710 to 1785 (MHz) 1850 to 1910 (MHz)	2.11 (W) (33.25 dBm) 2.11 (W) (33.25 dBm) 1.06 (W) (30.25 dBm) 1.06 (W) (30.25 dBm)	Behind the combination meter

12-2. Bulb Chart

■ Safety Precautions

WARNING

Bulbs may become very hot while illuminated. Before replacing bulbs, turn off the lights and wait until the bulbs cool down. Otherwise, there is a risk of sustaining a burn injury.

CAUTION

Replace any bulb only with a new bulb of the specified wattage. Using a bulb of different wattage could result in a fire.

– CONTINUED –

■ Bulb Chart

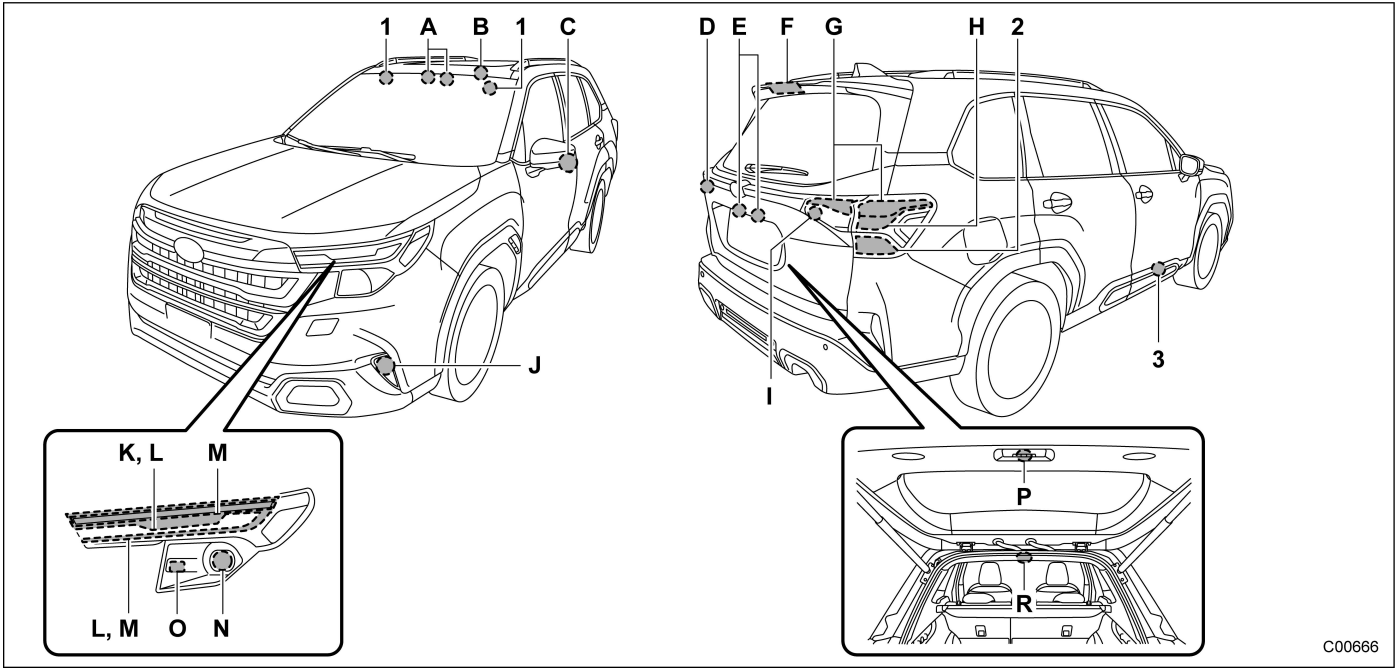

NOTE

Lights indicated by letters are the LED (Light Emitting Diode) type. We recommend that you consult your SUBARU dealer for replacement.

		Wattage	Bulb No.
1	Vanity mirror lights	12 V-2 W	—
2	Rear turn signal lights	12 V-21 W	WY21W
3	Door step lights	12 V-5 W	W5W
A	Map lights	—	—
B	Dome light	—	—
C	Side turn signal lights	—	—
D	Rear fog light or backup light (LHD models)	—	—
	Backup light (RHD models)	—	—
E	License plate lights	—	—
F	High-mounted stop light	—	—
G	Tail lights	—	—
H	Stop lights	—	—
I	Backup light (LHD models)	—	—
	Rear fog light (RHD models)	—	—
J	Front fog lights	—	—
K	Front turn signal lights	—	—
L	Daytime running light	—	—
M	Position lamps	—	—
N	Low and high beam headlights	—	—
O	Cornering lamps	—	—
P	Rear gate light (if equipped)	—	—
R	Cargo area light	—	—

12-3. Vehicle Identification

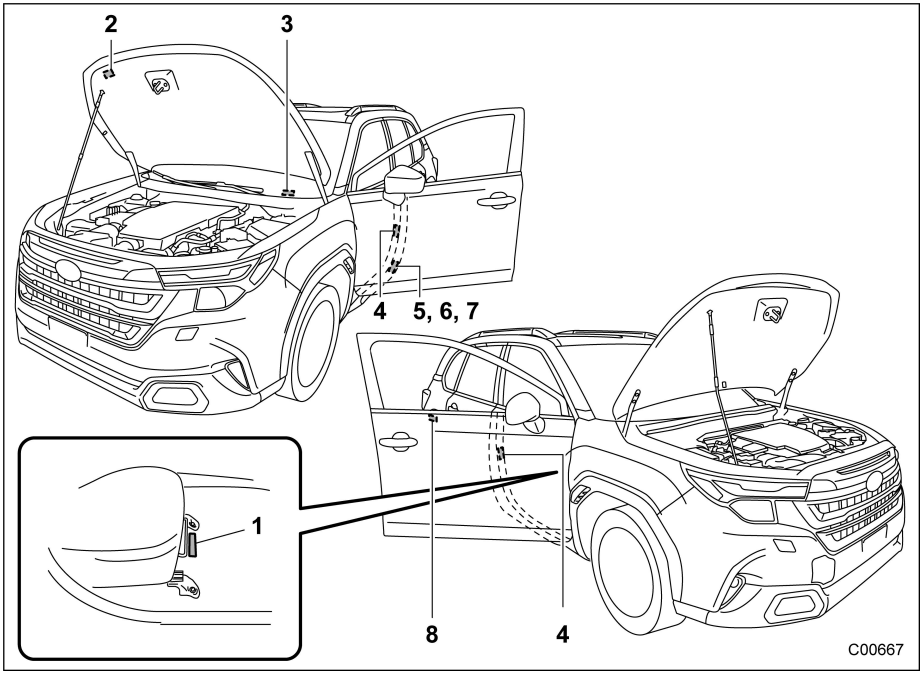

1 Vehicle identification number under the floor carpet of the right-hand front seat
2 Air conditioner label
3 Vehicle identification number plate
4 Tire inflation pressure label
5 ID label (if equipped)
6 Built date label (if equipped)
7 Model number label (if equipped)
8 Fuel label

12-4. Function Settings

■ Function Settings and Adjustments on the Center Information Display

Setting adjustments can be manually changed within the center information display to meet your personal requirements. Refer to “Center Information Display (CID)” ☞P214.

■ Function Settings and Adjustments Performed by a Dealer

Item	Function	Available settings	Factory default setting
Remote keyless entry system (models with door unlock selection function) (models without double locking system)	Driver door unlock	Driver door only/All	All
Key lock-in prevention*1	Key lock-in prevention	Operation/Non-operation	Operation
Reverse gear interlocked rear wiper	Reverse gear interlocked rear wiper operation	Operation/Non-operation	Operation
Windows open function	Open/closing all the windows	Operation/Non-operation	Non-operation
Welcome lighting function	Welcome lighting leaving time set	30 seconds/60 seconds/90 seconds/OFF	30 seconds
High beam assist function*1	High beam assist function	Operation/Non-operation	Operation
Automatic rain sensing windshield wiper	Automatic adjusting mode of wiper timing	Rain-sensing mode/vehicle speed interlocking mode	Rain-sensing mode
Cornering lamps function	Cornering lamps function	Operation/Non-operation	Operation
Power rear gate open function*1	Power rear gate opening by access key fob	Non-operation/Pressing twice/Pressing and holding	Pressing and holding
Hands-Free Power Rear Gate*1	Setting the door to lock when the rear gate closes	Operation/Non-operation	Non-operation
	Setting the time delay for closing the door after performing a kicking motion	0 seconds/1 second/2 seconds/3 seconds	2 seconds

*1: If equipped

13-1. Built Date Information (If Equipped) 534
Definition 534
Location 534
13-2. Declaration of Conformity in Accordance with EMC Directive 2014/30/EC 535
Compressor 535
AUX USB BOX 536
13-3. Declaration of Conformity in Accordance with the Radio Equipment Directive (2014/53/EU) 536
Replacing a Coin/Button Cell Battery Precautions (Access Key) 536
Access Key 542
Immobilizer 544
Tire Pressure Monitoring System 547
Subaru Rear Vehicle Detection (SRVD) 556
Front Cross Traffic Information/Front Cross Traffic Braking 561
LF Antenna 564
Wireless Charger 567
Importer Information 569
13-4. Technical Information 574
Singapore Models 574
Dominican Republic Models 574
Guatemala Republic Models 575
Philippine Models 576
Taiwan Models 576
Argentina Models 578
Jamaica Models 579
Paraguay Models 580
Australia/New Zealand Models 581
Ukraine Models 581
Mexico Models 582

13-1. Built Date Information (If Equipped)

■ Definition

The “BUILT DATE” is the calendar month and the year in which the body shell and powertrain sub-assemblies are conjoined and the vehicle is driven or moved from the production line.

■ Location

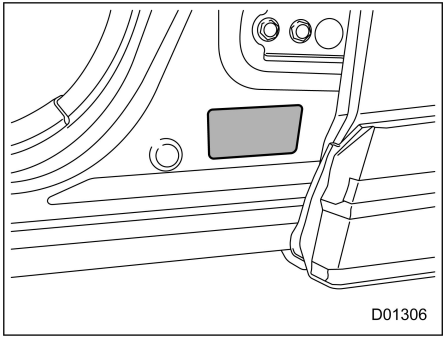

The “BUILT DATE” is indicated on a label which is located on the left side center pillar as shown in the illustration.

13-2. Declaration of Conformity in Accordance with EMC Directive 2014/30/EC

■ Compressor

CE **EC-Declaration of Conformity**

The following equipment:

Air Compressor

(Product Name)

9114 (UW0869VE 8A)

(Model Designation / Brand Name)

UNIK WORLD IND. CO., LTD.

(Manufacturer Name)

NO. 110-2, Xiwei, Shanhua Dist., Tainan City 74163, Taiwan (R.O.C.)

(Manufacturer Address)

is hereby confirmed to comply with the requirements set out in the Council Directive on the Approximation of the Laws of the Member States relating to Electromagnetic Compatibility Directive (2014/30/EU). For the evaluation regarding the Electromagnetic Compatibility (2014/30/EU) the following standards are applied:

EN 55014-1: 2017+A11: 2020
EN 55014-2: 1997+A1: 2001+A2: 2008+AC: 1997
including(Category I)

The following manufacturer / importer or authorized representative established within the EU is responsible for this declaration:

UNIK WORLD IND. CO., LTD

(Company Name)

NO. 110-2, Xiwei, Shanhua Dist., Tainan City 74163, Taiwan (R.O.C.)

(Company Address)

Person responsible for making this declaration:

VINCENT CHOU

(Name, Surname)

President

(Position / Title)

Tainan 2022. 03. 17. Vincent Chou.

(Place) (Date) (Legal Signature)

D01291

■ AUX USB BOX

RECYCLING: This product bears the selective sorting symbol for Waste electrical and electronic equipment (WEEE). This means that this product must be handled pursuant to European directive 2012/19/EU in order to be recycled or dismantled to minimize its impact on the environment;

⎓ The symbol indicates DC voltage.

This product max. operating ambient temperate is 80°C.

The ventilation should not be impeded by covering the ventilation openings with items, such as newspapers, table-cloths, curtains, etc.;

Hereby, Faurecia Clarion, declares that this [EF-3271, EF-3272, EF-3274, EF-3275] is in compliance with the essential requirements and other relevant provisions of Directive 2014/30/EU.

The full text of the EU declaration of conformity is available at the following internet address: https://www.clarion.com/xe/en/product-compliance/subaru/re-doc/21DC-CT02/index.html

13-3. Declaration of Conformity in Accordance with the Radio Equipment Directive (2014/53/EU)

■ Replacing a Coin/Button Cell Battery Precautions (Access Key)

⚠ This mark is a safety/warning mark.

Do not ingest battery.
Chemical Burn Hazard
This product contains a coin / button cell battery.
If the coin / button cell battery is swallowed, it can cause severe internal burns in just 2 hours and can lead to death.
Keep new and used batteries away from children.
If the battery compartment does not close securely, stop using the product and keep it away from children.
If you think batteries might have been swallowed or placed inside any part of the body, seek immediate medical attention.

CAUTION
Risk of explosion if the battery is replaced by an incorrect type.
Replace battery with the same type.

CAUTION
Risk of explosion or the leakage of flammable liquid or gas.

Do not use in /store in /bring into environment of extremely high temperature or extremely low pressure due to the very high altitude.
Do not attempt to burn, crush, or cut used battery.

⚠ Tämä merkki on turvallisuus/varoitusmerkki.

Älä nielaise paristoa.
Syövyttävää!
Tuote sisältää nappipariston.
Jos nappiparisto joutuu nieluun, voi se aiheuttaa vakavia sisäisiä palovammoja kahden tunnin kuluessa ja aiheuttaa kuoleman.
Pidä uudet ja käytetyt paristot poissa lasten ulottuvilta.
Jos paristolokero ei sulkeudu kunnolla, lopeta tuotteen käyttö ja pidä se poissa lasten ulottuvilta.
Hakeudu välittömästi lääkärin hoitoon, jos epäilet, että paristoja on joutunut jonkun nieluun tai muun kehonosan sisään.

VARO
Vääräntyyppinen paristo voi räjähtää.
Vaihda aina paristo samantyyppiseen.

VARO
Räjähdyksen tai syttyvien nesteiden tai kaasujen vuodon riski.

Älä käytä/säilytä tuotetta olosuhteissa, jossa se altistuu hyvin korkealle lämpötilalle tai paineelle tai suurten korkeuksien voimakkaalle alipaineelle.
Älä yritä polttaa, murskata tai leikata käytettyjä paristoja.

D00842

⚠ Dit is een veiligheids-/waarschuwingsteken.

Slik de batterij niet in.
Gevaar voor chemische brandwonden
Dit product bevat een knoopcelbatterij.
Bij inslikken kan de knoopcelbatterij binnen slechts 2 uur ernstige inwendige brandwonden veroorzaken, wat de dood tot gevolg kan hebben.
Houd nieuwe en gebruikte batterijen buiten het bereik van kinderen.
Stop met het gebruik van het product als het batterijvak niet goed sluit en houd het product buiten het bereik van kinderen.
Raadpleeg onmiddellijk een arts als u vermoedt dat een batterij is ingeslikt of in het lichaam is gestopt.

WAARSCHUWING
Er bestaat explosiegevaar als u de batterij vervangt door de verkeerde soort batterij.
Vervang de batterij door dezelfde soort batterij.

WAARSCHUWING
Explosiegevaar of gevaar voor lekken van brandbare vloeistof of brandbaar gas.

Niet gebruiken in/bewaren in/brengen naar een omgeving met extreem hoge temperatuur of extreem lage druk door zeer grote hoogte.
Verbrand en verpletter de gebruikte batterij niet en snijd deze niet open.

⚠ Ce marquage est un marquage de sécurité/d'avertissement.

Ne pas ingérer la pile.
Risque de brûlure chimique
Ce produit contient une pile bouton.
Si la pile bouton est avalée, elle peut provoquer de graves brûlures internes en seulement 2 heures et entraîner la mort.
Gardez les piles neuves et usagées hors de la portée des enfants.
Si le compartiment de pile ne se ferme pas correctement, arrêtez d'utiliser le produit et gardez-le à l'écart des enfants.
Si vous croyez que des piles ont été avalées ou placées dans n'importe quelle partie du corps, consultez immédiatement un médecin.

MISE EN GARDE
Risque d'explosion si la pile est remplacée par un type incorrect.
Remplacez la pile par le même type.

MISE EN GARDE
Risque d'explosion ou de fuite de liquide ou de gaz inflammable.

Ne pas utiliser / stocker / mettre dans un environnement de température extrêmement élevée ou de pression extrêmement basse en raison de l'altitude très élevée. N'essayez pas de brûler, écraser ou couper la pile usagée.

D00843

⚠ Denna etikett är en säkerhets-/varningsetikett.

Svälj inte batteriet (eller stoppa det i munnen).
Risk för kemisk brännskada
Denna produkt innehåller ett mynt-/knappbatteri.
Om mynt-/knappbatteriet sväljs ned kan det på bara 2 timmar orsaka allvarliga inre brännskador och kan leda till dödsfall.
Förvara nya och använda batterier utom räckhåll för barn.
Om batterifacket inte kan stängas säkert, sluta använda produkten och håll den borta från barn.
Om du tror att batterier har svalts ner eller kommit in i någon del av kroppen, sök omedelbart medicinsk hjälp.

OBSERVERA!
Explosionsrisk föreligger om batteriet ersätts med en felaktig typ.
Ersätt batteriet med ett batteri av samma typ.

OBSERVERA!
Risk för explosion eller läckage av brandfarlig vätska eller gas.

Använd inte i/förvara inte i/för inte i omedelbar närhet av extremt hög temperatur eller extremt lågt tryck beroende på mycket hög höjd.
Försök inte bränna, krossa eller skära sönder ett använt batteri.

⚠ Dette mærke er et sikkerheds-/ advarselsmærke.

Indsæt ikke batteri.
Kemisk forbrændingsfare
Dette produkt indeholder et mønt-/knapcellebatteri.
Hvis mønt-/knapcellebatteriet sluges, kan det forårsage alvorlige indre forbrændinger på kun 2 timer og kan føre til døden.
Hold nye og brugte batterier væk fra børn.
Hvis batterirummet ikke lukker sikkert, skal du holde op med at bruge produktet og holde det væk fra børn.
Hvis du tror, at batterier kan være blevet slugt eller være blevet placeret i nogen del af kroppen, skal du straks søge lægehjælp.

ADVARSEL
Fare for eksplosion, hvis batteriet udskiftes med en forkert type.
Udskift batteri med samme type.

ADVARSEL
Risiko for eksplosion eller lækage af brandfarlig væske eller gas.

Må ikke anvendes i/opbevares i/indbringes i omgivelser med ekstremt høj temperatur eller ekstremt lavt tryk på grund af den meget høje højde.
Forsøg ikke at brænde, knuse eller skære brugt batteri.

D00844

⚠ Dieses Zeichen ist ein Sicherheits-/Warnzeichen.

Nehmen Sie keine Batterien zu sich.
Chemische Verbrennungsgefahr
Dieses Produkt enthält eine Knopfzellenbatterie.
Wird die Knopfzellenbatterie verschluckt, kann sie innerhalb von nur 2 Stunden schwere innere Verbrennungen verursachen und zum Tode führen.
Halten Sie neue und gebrauchte Batterien von Kindern fern.
Wenn das Batteriefach nicht sicher schließt, stellen Sie die Verwendung des Geräts ein und halten Sie es von Kindern fern.
Wenn Sie der Meinung sind, dass Batterien verschluckt oder in irgendeinen Teil des Körpers platziert wurden, suchen Sie sofort einen Arzt auf.

WARNUNG
Explosionsgefahr, wenn die Batterie durch einen falschen Typ ersetzt wird.
Ersetzen Sie die Batterie durch den gleichen Typ.

WARNUNG
Gefahr von Explosion oder Austreten von brennbaren Flüssigkeiten oder Gasen.

Verwenden/lagern/bringen Sie das Gerät nicht in Umgebungen mit extrem hoher Temperatur oder extrem niedrigem Druck aufgrund von sehr großer Höhe.
Versuchen Sie nicht, verbrauchte Batterien zu verbrennen, zu zerquetschen oder zu zerschneiden.

⚠ Σήμα για την ασφάλεια/προειδοποιητικό σήμα.

Μην καταπίνετε την μπαταρία.
Κίνδυνος χημικού εγκαύματος
Αυτό το προϊόν περιέχει επίπεδη μπαταρία.
Σε περίπτωση κατάποσης της επίπεδης μπαταρίας μπορούν να προκληθούν σοβαρά εσωτερικά εγκαύματα σε διάστημα μόλις 2 ωρών και να επέλθει θάνατος.
Φυλάσσετε τις καινούριες και τις χρησιμοποιημένες μπαταρίες μακριά από τα παιδιά.
Εάν η θήκη της μπαταρίας δεν κλείνει καλά, σταματήστε να χρησιμοποιείτε το προϊόν και φυλάξτε το μακριά από τα παιδιά.
Εάν πιστεύετε ότι υπάρχει περίπτωση να έχει γίνει κατάποση μπαταρίας ή εισχώρησή της σε κάποιο μέρος του σώματος, ζητήστε αμέσως ιατρική συμβουλή.

ΠΡΟΣΟΧΗ
Υπάρχει κίνδυνος έκρηξης εάν τοποθετηθεί λάθος τύπος μπαταρίας.
Αντικαταστήστε την μπαταρία με τον ίδιο τύπο μπαταρίας

ΠΡΟΣΟΧΗ
Υπάρχει κίνδυνος έκρηξης ή διαρροής εύφλεκτου υγρού ή αερίου.

Μην χρησιμοποιείτε/αποθηκεύετε/μεταφέρετε την μπαταρία σε περιβάλλον με υπερβολικά υψηλή θερμοκρασία ή υπερβολικά χαμηλή πίεση που οφείλεται σε πολύ υψηλό υψόμετρο. Μην επιχειρήσετε να κάψετε, να συνθλίψετε ή να κόψετε την χρησιμοποιημένη μπαταρία.

D00845

– CONTINUED –

⚠ Questo simbolo è un simbolo di sicurezza / avvertenza.

Non ingerire la batteria.
Pericolo di ustione chimica
Il prodotto contiene una batteria a cella a moneta / bottone.
Se la batteria a cella a moneta / bottone viene inghiottita può causare delle gravi ustioni interne in sole due ore e provocare il decesso.
Tenere le batterie nuove e quelle usate fuori dalla portata dei bambini.
Se il vano batterie non si chiude in modo sicuro, smettere di usare il prodotto e tenerlo fuori dalla portata dei bambini.
Se si ritiene che delle batterie possano essere state inghiottite o essere state introdotte all'interno di qualsivoglia parte del corpo consultare immediatamente un medico.

ATTENZIONE
Se la batteria è sostituita con una di tipo scorretto c'è rischio che esploda.
Sostituire la batteria con una del medesimo tipo.

ATTENZIONE
Rischio di esplosione o di perdita di liquidi o gas infiammabili.

Non usare / custodire / mettere in ambienti con temperature estremamente alte o una pressione estremamente bassa dovuta a una notevole altitudine.
Non cercare di bruciare, frantumare o tagliare delle batterie usate.

⚠ Esta marca es una marca de seguridad/advertencia.

No ingiera la pila.
Riesgo de Quemadura Química
Este producto contiene una pila tipo moneda/botón.
Si la pila de moneda/botón se traga, puede provocar quemaduras internas graves en solo 2 horas y puede causar la muerte.
Mantenga las pilas nuevas y las usadas lejos de los niños.
Si el compartimiento de la pila no se cierra de forma segura, deje de usar el producto y manténgalo alejado de los niños.
Si cree que las pilas pueden haberse tragado o colocado dentro de cualquier parte del cuerpo, busque atención médica inmediata.

PRECAUCIÓN
Riesgo de explosión si la batería es reemplazada por una de tipo incorrecto.
Reemplace la batería con una del mismo tipo.

PRECAUCIÓN
Riesgo de explosión o fuga de líquido o gas inflamables.

No use/almacene/lleve a un entorno de temperatura extremadamente alta o extremadamente baja, debido a la gran altitud.
No intente quemar, aplastar o cortar la batería usada.

D00846

⚠ Esta marca é uma marca de segurança/alerta.

Não ingerir a pilha.
Perigo de queimaduras químicas
Este produto contém uma pilha de tipo moeda/botão.
Se a pilha de moeda/botão for engolida, pode causar queimaduras internas graves em apenas 2 horas e conduzir à morte.
Mantenha as pilhas novas e usadas longe das crianças.
Se o compartimento da pilha não se fechar de forma segura, pare de usar o produto e mantenha-o afastado das crianças.
Se achar que as pilhas podem ter sido engolidas ou colocadas dentro de qualquer parte do corpo, procure imediatamente um médico.

CUIDADO
Risco de explosão se a pilha for substituída por um tipo incorreto.
Substitua a pilha pelo mesmo tipo.

CUIDADO
Risco de explosão ou de vazamento de líquido ou gás inflamável.

Não use/armazene/coloque num ambiente com temperaturas extremamente altas ou pressões extremamente baixas devido a altitude elevada.
Não tente queimar, esmagar ou cortar a pilha usada.

⚠ Din il-marka hija marka ta' sigurtà/avviż.

Tiblax il-batterija.
Periklu ta' ħruq kimiku
Dan il-prodott fih batterija ċatta qisha buttuna żgħira.
Jekk din il-batterija ċatta tinbelha, tista' tikkawża ħruq intern sever f'temm sagħtejn u tista' twassal għall-mewt.
Żomm il-batteriji godda u użjenа 'l bogħod minn fejn jistgħu jilħquhom it-tfal.
Jekk il-kompartiment tal-batterija ma jistax jingħalaq b'mod sigur, tużax aktar il-prodott u żommu 'l bogħod minn fejn jistgħu jilħquh it-tfal.
Jekk iħoloq xi suspett li l-batteriji nbelgħu jew ġew imdeffsa f'xi parti tal-ġisem, fittex għajnuna medika minnufih.

ATTENZJONI
Riskju ta' splużjoni jekk il-batterija jekk il-batterija tinbidel ma' waħda tat-tip skorrett.
Il-batterija għandha tinbidel ma' waħda tal-istess tip.

ATTENZJONI
Riskju ta' splużjoni jew ħruġ ta' likwidu jew gass fjammabbli.

Tużax/taħżinx f'ambjent b'temperatura għolja ħafna jew pressjoni estremament baxxa minħabba l'altitudni għolja ħafna.
Tipprovax taħraq, tgħaffeġ jew taqta' l-batterija użata.

D00847

⚠ See tähis on ohutus-/hoiatustähis.

Ärge neelake patareid alla.
Keemilise põletuse oht
See toode sisaldab kella-/nööppatareid.
Allaneelamisel võib kella-/nööppatarei juba kahe tunniga põhjustada raskeid sisemisi põletusi ning viia surmani.
Hoidke uusi ja kasutatud patareisid lastele kättesaamatus kohas.
Kui patareipesa ei sulgu kindlalt, lõpetage toote kasutamine ja paigutage see lastele kättesaamatusse kohta.
Kui kahtlustate patareide allaneelamist või kehasse sattumist, pöörduge viivitamata arsti poole.

ETTEVAATUST!
Patarei asendamine vale tüüpi patareiga põhjustab plahvatusohtu.
Asendage patarei sama tüüpi patareiga.

ETTEVAATUST!
Plahvatuse või tuleohtliku vedeliku või gaasi lekkimise oht.

Ärge kasutage/hoidke toodet keskkonnas ega viige keskkonda, kus on äärmiselt kõrge temperatuur või väga suurest kõrgusest tingitud äärmiselt madal õhurõhk.
Ärge üritage kasutatud patareid põletada, purustada ega lõigata.

⚠ Ez egy biztonsági/figyelmeztető jelzés.

Ne nyelje le az elemeket.
Vegyi égés veszély
Ez a termék gombelemeket tartalmaz.
Ha lenyeli a gombelemeket, akkor alig 2 órán belül halálos következményű, komoly égést szenvedhet.
Az új és lemerült elemeket gyermekektől tartsa távol.
Ha az elemrekesz nem zár biztonságosan, akkor ne használja tovább a terméket és gyermekektől tartsa távol.
Ha úgy gondolja, hogy az elemeket lenyelték vagy más testrészbe dugták, akkor azonnal hívja fel a háziorvosát.

VIGYÁZAT
Robbanásveszély áll fenn, ha nem megfelelő típusúra cseréli ki az elemet.
Az elemet mindig azonos típusúra cserélje.

VIGYÁZAT
Robbanásveszély, illetve éghető folyadék-, vagy gázszivárgás-veszély áll fenn.

Ne használja, tárolja vagy vigye nagyon magas hőmérsékletű vagy nagy magasságok miatti nagyon alacsony nyomású környezetbe.
A lemerült elemeket ne próbálja meg elégetni, széttörni vagy felvágni.

D00848

⚠ Táto značka je bezpečnostná značka/značka upozornenia.

Batériu nekonzumujte.
Nebezpečenstvo chemického popálenia
Tento výrobok obsahuje mincovú/gombíkovú článkovú batériu.
Ak dôjde k požitiu mincovej/gombíkovej článkovej batérie, v priebehu len 2 hodín môže dôjsť k vážnym vnútorným popáleninám a k smrti.
Nové a použité batérie uchovávajte mimo dosahu detí.
Ak priehradku na batérie nemožno bezpečne uzavrieť, prestaňte výrobok používať a uschovajte ho mimo dosahu detí.
Ak si myslíte, že došlo k požitiu batérií alebo k ich vloženiu do ktorejkoľvek časti tela, okamžite vyhľadajte zdravotnícku pomoc.

UPOZORNENIE
Ak batériu vymeníte za nesprávny typ, môže dôjsť k výbuchu.
Batériu nahraďte rovnakým typom.

UPOZORNENIE
Riziko výbuchu alebo unikania horľavej kvapaliny alebo plynu.

Nepoužívajte/neskladujte/neprinášajte do prostredia s extrémne vysokou teplotou alebo extrémne nízkym tlakom vo veľmi vysokej nadmorskej výške.
Použitú batériu sa nepokúšajte spaľovať, drviť ani prerezať.

⚠ Tato značka je bezpečnostní varovnou značkou.

Baterii nepolykejte.
Nebezpečí poleptání žíravinou.
Tento výrobek obsahuje knoflíkovou elektrickou baterii.
Pokud byste knoflíkovou elektrickou baterii spolkli, může to i jen do 2 hodin způsobit těžké vnitřní poleptání a vést to až k úmrtí.
Nové i použité baterie držte mimo dosah dětí.
Pokud by schránka baterie nebyla bezpečně uzavřena, pak takový výrobek přestaňte používat a držte jej mimo dosah dětí.
Pokud byste si mysleli, že mohlo dojít ke spolknutí baterie nebo k jejímu umístění do nějaké části těla, vyhledejte okamžitou lékařskou pomoc.

UPOZORNĚNÍ
Pokud by byla baterie vyměněna za nesprávný typ, hrozí riziko exploze.
Baterii vyměňujte za stejný typ.

UPOZORNĚNÍ
Hrozí exploze nebo únik hořlavých kapalin nebo plynů.

V prostředí s extrémně vysokou teplotou nebo extrémně nízkým tlakem kvůli hodně vysoké nadmořské výšce to nepoužívejte, neskladujte to v něm, ani to do něj nepřinášejte. Baterii se nepokoušejte spálit, rozbít nebo rozřezat.

D00849

⚠ Ta oznaka je varnostna/opozorilna oznaka.

Baterij ne zaužijte.
Nevarnost kemičnih opeklin.
Ta izdelek vsebuje baterijo v obliki kovanca / gumbasto celico.
V primeru zaužitja baterije v obliki kovanca / gumbaste celice, le ta lahko povzroči resne notranje opekline v samo 2 urah in celo smrt.
Nove in uporabljene baterije hranite izven dosega otrok.
Če nazdelka za baterijo ne morete zaprete, prenehajte uporabljati izdelek in ga hranite izven dosega otrok.
Če menite, da je bila baterija zaužita ali pa se nahaja v notranjosti kateregakoli dela telesa, nemudoma poiščite zdravniško pomoč.

POZOR
Če baterijo zamenjate z nepravilno vrsto baterije, obstaja tveganje eksplozije.
Baterijo zamenjajte z njej enako baterijo.

POZOR
Tveganje eksplozije ali uhajanja gorljive tekočine ali plina.

Ne uporabljajte / skladiščite / hranite baterije v okolju z izredno visoko temperaturo ali z izredno nizkim tlakom zaradi visoke nadmorske višine.
Uporabljene baterije ne poskušajte zažgati, zdrobiti ali rezati.

⚠ Šis ženklas – tai saugos / įspėjamasis ženklas.

Neprarykite elemento.
Cheminio nudegimo pavojus
Šiame gaminyje yra monetos / sagos formos elementas.
Prarijus monetos / sagos formos elementą, vos per 2 valandas galima patirti sunkių vidinių nudegimų ir mirti.
Naujus ir naudotus elementus laikykite vaikams nepasiekiamoje vietoje.
Jei elementų skyrius tvirtai neužsidaro, nenaudokite gaminio ir laikykite jį vaikams nepasiekiamoje vietoje.
Jei manote, kad elementai galėjo būti praryti arba įkišti į bet kurią kūno dalį, nedelsdami kreipkitės į medicinos įstaigą.

DĖMESIO
Elementą pakeitus netinkamo tipo gaminiu kyla sprogimo pavojus.
Elementą pakeiskite tokio paties tipo gaminiu.

DĖMESIO
Sprogimo arba degaus skysčio ar dujų nuotėkio pavojus.

Nenaudokite / nelaikykite / neatneškite į itin aukštos temperatūros aplinką ar aplinką, kurioje slegis itin žemas dėl labai didelio aukščio.
Neįmėginkite naudotą elementą deginti, traiškyti ar pjaustyti.

D00850

⚠ Šī ir drošības/brīdinājuma atzīme.

Nenorijiet akumulatoru.
Ķīmiska apdeguma risks
Šis produkts satur monētas/pogas elementa akumulatoru.
Monētas/pogas elementa akumulatora norīšanas gadījumā tas var izraisīt nopietnus iekšējus apdegumus 2 stundu laikā un, iespējams, nāvi.
Jaunus un lietotus akumulatorus sargājiet no bērniem.
Ja akumulatora nodalījumu nevar stingri aizvērt, pārtrauciet produkta lietošanu un sargājiet to no bērniem.
Ja domājat, ka akumulators ir norīts vai ievietots kādā ķermeņa atverē, nekavējoties nepieciešama medicīniska palīdzība.

UZMANĪBU
Ievietojot nepareiza veida akumulatoru, pastāv sprādziena risks.
Nomainiet tikai ar tāda paša veida akumulatoriem.

UZMANĪBU
Sprādziena vai uzliesmojoša šķidruma vai gāzes noplūdes risks.

Nelietojiet/neglabājiet/neienesiet vidē, kurā ir ļoti augsta temperatūra vai ārkārtīgi zems spiediens ļoti liela augstuma ietekmē.
Izlietoto akumulatoru neēģiniet dedzināt, sasmalcināt vai sagriezt.

⚠ Niniejszy znak jest znakiem bezpieczeństwa/ostrzeżenia.

Nie wolno połykać baterii.
Istnieje zagrożenie poparzeniem chemicznym.
Produkt ten zawiera baterię typu guzikowego.
W przypadku połknięcia może ona spowodować poważne poparzenia wewnętrzne w ciągu zaledwie 2 godzin i doprowadzić do śmierci.
Nowe i zużyte baterie należy przechowywać z dala od dzieci.
Jeśli komora baterii nie zamyka się prawidłowo, należy zaprzestać używania produktu i przechowywać go z dala od dzieci.
Jeśli istnieje prawdopodobieństwo, że bateria została połknięta albo znalazła się w inny sposób wewnątrz ciała, należy natychmiast zgłosić się do lekarza.

UWAGA
W przypadku wymiany baterii na baterię nieprawidłowego typu istnieje zagrożenie wybuchem. Wymieniać wyłącznie na baterię takiego samego typu.

UWAGA
Zagrożenie wybuchem lub wyciekiem łatwopalnej cieczy lub gazu.

Nie stosować, nie przechowywać ani nie wprowadzać do środowiska o skrajnie wysokiej temperaturze lub skrajnie niskim ciśnieniu związanym z bardzo dużą wysokością nad poziomem morza. Nie próbować palić, miażdżyć ani ciąć baterii.

D00851

– CONTINUED –

⚠ Þetta merki er öryggis-/viðvörunarmerki.

Gleypið ekki rafhlöðuna.
Hætta á efnabruna
Þessi vara inniheldur flata rafhlöðu.
Ef rafhlaðan er gleypt getur það valdið alvarlegum innvortis brunasárum á innan við 2 klukkutímum, sem getur leitt til dauða.
Geymið nýjar og notaðar rafhlöður þar sem börn ná ekki til.
Ef rafhlöðuhólfið lokast ekki örugglega, skal hætta notkun vörunnar og geyma hana þar sem börn ná ekki til.
Ef grunur leikur á að rafhlöður hafi verið gleyptar eða settar inn í eitthvert líkamsop, skal leita læknishjálpar tafarlaust.

VARÚÐ
Hætta á sprengingu ef rafhlöðunni er skipt út fyrir ranga gerð.
Notið sömu gerð af rafhlöðu þegar skipt er um hana.

VARÚÐ
Hætta á sprengingu eða leka á eldfimum vökva eða gasi.

Má ekki nota/geyma/flytja í umhverfi þar sem er afar hár hiti eða afar lágur loftþrýstingur vegna mikillar hæðar yfir sjávarmáli.
Ekki má reyna að brenna, kremja eða skera í notaða rafhlöðu.

⚠ Dette merket er sikkerhets-/advarselsmerke.

Du må ikke spise batterier.
Fare for kjemisk forbrenning
Dette produktet inneholder et cellebatteri.
Hvis cellebatteriet svelges, kan det forårsake alvorlige interne forbrenninger bare på 2 timer, og kan føre til døden.
Hold nye og brukte batterier utenfor barnas rekkevidde.
Hvis batterirommet ikke lukkes riktig, stopp bruken av produktet og hold det på avstand fra barn.
Hvis du har mistanke om at batteriene er blitt svelget eller kommet inn i kroppen, oppsøk lege umiddelbart.

FORSIKTIG!
Fare for eksplosjon hvis batteriet byttes ut med et feil batteri.
Skift ut batteriet med ett av samme type.

FORSIKTIG!
Fare for eksplosjon eller lekkasje av antennelig væske eller gass.

Bruk ikke/oppbevar ikke under ekstrem temperatur eller ekstremt trykk på grunn av betraktelig høyde over havet.
Forsøk ikke å brenne, knuse eller kappe batteriet.

D00852

⚠ Този знак представлява знак за безопасност/предупреждение.

Не поглъщайте батерията.
Опасност от изгаряне на химикали
Този продукт съдържа кръгла плоска батерия.
Ако кръглата плоска батерия е погълната, тя може да причини тежки вътрешни изгаряния само за 2 часа и може да доведе до смърт.
Пазете новите и използвани батерии далеч от деца.
Ако отделението за батериите не се затваря добре, спрете да използвате продукта и го дръжте далеч от деца.
Ако смятате, че батериите биха могли да бъдат погълнати или поставени в някоя част на тялото, потърсете незабавно медицинска помощ.

ВНИМАНИЕ
Опасност от експлозия, ако батерията е заменена от неправилен тип.
Сменете батерията със същия тип.

ВНИМАНИЕ
Опасност от експлозия или изтичане на запалима течност или газ.

Не използвайте/съхранявайте/въвеждайте в среда с изключително висока температура или изключително ниско налягане поради много високата височина. Не се опитвайте да изгаряте, смачквате или отрязвате използваната батерия.

⚠ Acest marcaj este un marcaj de siguranță/avertizare.

A nu se ingera bateria.
Pericol de arsură chimică
Acest produs conține o baterie tip monedă / nasture.
În cazul înghițirii bateriei tip monedă / nasture, în doar 2 ore se pot produce arsuri interne grave, care pot provoca decesul persoanei.
A nu se lăsa la îndemâna copiilor bateriile noi, precum nici cele uzate.
În cazul în care un compartiment pentru baterii nu se închide corect, întrerupeți utilizarea produsului și nu îl lăsați la îndemâna copiilor.
În cazul înghițirii sau al introducerii bateriei în orice parte a corpului, solicitați imediat îngrijire medicală.

ATENȚIE!
Risc de explozie în cazul înlocuirii bateriei cu una de alt tip.
Înlocuiți bateria cu una de același tip.

ATENȚIE!
Risc de explozie sau de scurgeri de lichide sau gaze inflamabile.

A nu se folosi / depozita / amplasa în medii cu temperaturi extrem de ridicate sau cu presiuni extrem de scăzute generate de altitudini foarte mari.
A nu se arde, zdrobi sau tăia bateriile uzate.

D00853

⚠ Ovo je sigurnosna oznaka / oznaka upozorenja.

Nemojte gutati bateriju.
Opasnost od kemijskih opeklina
Ovaj proizvod sadržava kovanica-baterije ili gumb-baterije.
Ako se kovanica-baterija ili gumb-baterija proguta, to u roku od samo dva sata može uzrokovati ozbiljne unutarnje opekline te rezultirati smrću.
Nove i upotrijebljene baterije držite dalje od djece.
Ako utor za bateriju nije sigurno zatvoren, prestanite upotrebljavati proizvod i držite ga dalje od djece.
Ako mislite da su baterije možda progutane ili stavljene u bilo koji dio tijela, zatražite hitnu medicinsku pomoć.

OPREZ
Rizik od eksplozije ako se baterija zamijeni neispravnim tipom baterije.
Bateriju zamijenite istim tipom.

OPREZ
Rizik od eksplozije ili istjecanja zapaljive tekućine ili plina.

Nemojte upotrebljavati / pohranjivati / unositi u okruženje iznimno visokih temperatura ili iznimno niskog tlaka zbog vrlo visoke nadmorske visine.
Nemojte pokušavati spaljivati, drobiti ili rezati iskorištenu bateriju.

⚠ Ovo je oznaka za bezbednost/oznaka upozorenja.

Ne gutajte baterije.
Rizik od hemijskih opekotina
Ovaj proizvod sadrži baterije u obliku novčića / dugmeta.
U slučaju gutanja baterije u obliku novčića / dugmeta, može doći do ozbiljnih unutrašnjih opekotina u roku od samo 2 sata, što može dovesti do smrtnog ishoda.
Držite i nove i stare (korišćene) baterije van domašaja dece.
U slučaju da pregrada za baterije ne može da se zatvori na bezbedan način, prestanite da koristite proizvod i odložite ga van domašaja dece.
Ukoliko mislite da je došlo do gutanja baterija ili do njihovog umetanja u bilo koji deo tela, momentalno se obratite lekaru.

OPREZ
Rizik od eksplozije u slučaju zamene baterije drugom baterijom neodgovarajućeg tipa. Zamenite bateriju drugom baterijom istog tipa.

OPREZ
Rizik od eksplozije ili curenja zapaljive tečnosti ili gasa.

Ne koristite / ne odlažite / ne unosite u okruženje sa izuzetno visokim temperaturama ili u okruženju sa izuzetno niskim pritiskom zbog velike nadmorske visine. Ne pokušavajte da zapalite, da zgnječite ili da presečete korišćenu bateriju.

D00854

⚠ Aquesta marca és una marca de seguretat/advertència.

No ingeriu la pila.
Perill de cremades químiques
Aquest producte conté una pila de botó.
Si s'empasseu la pila de botó, aquesta pot causar greus cremades internes en només 2 hores i provocar la mort.
Mantingueu les piles noves i usades lluny de l'abast dels nens.
Si el compartiment de la pila no es tanca de manera segura, deixeu d'utilitzar el producte i allunyeu-lo dels nens.
Si creieu que les piles podrien haver estat empassades o col·locades dins de qualsevol part del cos, busqueu atenció mèdica immediata.

PRECAUCIÓ
Risc d'explosió si la pila se substitueix per una altra d'un tipus incorrecte.
Substituïu la pila per una altra del mateix tipus.

PRECAUCIÓ
Risc d'explosió o fuga de líquids o gasos inflamables.

No la utilitzeu/guardeu/porteu a un entorn de temperatura extremadament alta o amb una pressió extremadament baixa a causa de l'altitud molt elevada.
No intenteu cremar, aixafar o tallar la pila usada.

⚠ Bu bir güvenlik uyarısı/damgasıdır.

Pili yutmayınız.
Kimyasal Yanık Tehlikesi
Bu ürün, düğme / hücre pil içermektedir.
Düğme / hücre pil yutulduğu takdirde, sadece 2 saat içerisinde tehlikeli iç yanıklara neden olabilir ve ölüme yol açabilir.
Yeni ve kullanılmış pilleri çocuklardan uzak tutunuz.
Pil bölmesi güvenli bir şekilde kapanmıyorsa, ürünü kullanmayınız ve çocuklardan uzak tutunuz.
Pillerin yutulmuş veya vücudun içinde herhangi bir yere yerleştirilmiş olduğundan şüphelenirseniz, derhal tıbbi müdahale başvurusunda bulununuz.

DİKKAT
Pil yanlış bir türle değiştirildiği takdirde patlama riski ortaya çıkabilir.
Aynı türde bir pille değiştiriniz.

DİKKAT
Patlama veya yanıcı sıvı ya da gaz sızıntısı riski.

Aşırı yüksek ısı veya çok yüksek rakım sebebiyle aşırı düşük basınç olan ortamlarda kullanmayınız / saklamayınız / bulundurmayınız.
Kullanılmış pilleri yakma, ezme veya kesme girişiminde bulunmayınız.

D00855

⚠ Kjo shenjë është simbol sigurie/paralajmërimi.

Mos e përtypni baterinë.
Rrezik për Djegie Kimike
Ky produkt përmban pole/butona baterie.
Nëse poli/butoni gëlltitet, mund të shkaktojë djegie të brendshme të rënda në vetëm dy orë dhe mund të çojë drejt vdekjes.
Mbani bateritë e reja dhe të përdorura larg fëmijëve.
Nëse ndarja e baterisë nuk mbyllet mirë,, ndërpritni përdorimin e produktit dhe mbajeni larg fëmijëve.
Nëse mendoni se bateritë mund të jenë gëlltitur ose vendosur brenda çdo pjese të trupit, kërkoni kujdes të menjëhershëm mjekësor.

KUJDES
Rrezik shpërthimi nëse bateria zëvendësohet nga një tip tjetër i pasaktë.
Zëvendësoni baterinë me të njëjtin tip baterie.

KUJDES
Rrezik shpërthimi ose rrjedhje të lëngut apo gazit.

Mos e përdorni apo ta ruani në mjedis me temperaturë jashtëzakonisht të lartë ose presion jashtëzakonisht të ulët për shkak të lartësisë gjeografike shumë të lartë.
Mos u përpiqni të djgjni, shtypni ose prisni me mjete baterinë e përdorur.

D00856

Dispose of used batteries according to the local laws.
Käytetyt paristot hävitetään paikallisten säännösten ja määräysten mukaisesti.
Gebruikte batterijen gerecycled in overeenstemming met de plaatselijke voorschriften.
Les batteries utilisées doivent être recyclées selon les lois locales.
Förbrukade batterier återvinns i enlighet med lokala föreskrifter.
De brugte batterier genbruges i overensstemmelse med lokale regler.
Verbrauchte Batterien werden entsprechend den lokalen Rechtsvorschriften entsorgt.
Οι χρησιμοποιημένες μπαταρίες απορρίπτονται σύμφωνα με τους τοπικούς κανονισμούς.
Smaltire le batterie esauste in base alle normative locali vigenti.
Deseche las baterías usadas de acuerdo con la ley local.
As baterias usadas são descartadas de acordo com as leis locais.
Armi l-batteriji qodma skont il-liġijiet lokali.
Kasutatud patareide utiliseerimine toimub vastavalt kohalikule seadusele.
A használt elemek megsemmisítése a helyi jogszabályok értelmében történik.
Použité batérie sa likvidujú podľa miestnych zákonov.
Použité baterie zlikvidujte v souladu s místními předpisy.
Uporabljene baterije odstranite v skladu z lokalnimi predpisi.
Naudotas baterijas utilizuokite pagal vietinius įstatymus.
Izmantotās baterijas utilizē saskaņā ar vietējo likumdošanu.
Zużyte baterie należy utylizować zgodnie z prawem lokalnym.
Fargaðu notuðum rafhlöðum samkvæmt innlendum lögum.
Brukte batterier resirkuleres i henhold til lokale bestemmelser.
Използваните батерии се рециклират в съответствие с местните разпоредби.
Aruncați bateriile uzate în conformitate cu legile locale.
Iskorištene baterije reciklirati u skladu s lokalnim propisima.
Искоришћене батерије одлажите у складу са локалним прописима.
Eliminació de bateries utilitzades d'acord amb les lleis locals.
Kullanılmış piller yerel mevzuata uygun olarak bertaraf edilecektir.
Hidhni bateritë e përdorura sipas ligjeve lokale.

D00908

– CONTINUED –

■ Access Key

Transmitter:
Model: 14AKB
Operation frequency: 433.92 MHz
Maximum output power (ERP): 0.03 mW
Manufacturer: DENSO CORPORATION
Address: 1-1, Showa-cho, Kariya-shi, Aichi-ken, 448-8661, Japan

передавач: модель: 14AKB
смугу радіочастот: 433.92 МҐц
максимальну потужність
випромінювання (ERP): 0.03 мВт

виробник: DENSO CORPORATION
адреса: 1-1, Showa-cho, Kariya-shi, Aichi-ken, 448-8661, Japan

D01179

Hereby, DENSO CORPORATION declares that the radio equipment type is in compliance with Directive 2014/53/EU.
The full text of the EU declaration of conformity is available at the following internet address:
https://www.denso.com/global/en/contact-us/doc/

DENSO CORPORATION vakuuttaa, että radiolaitetyyppi on direktiivin 2014/53/EU mukainen.
EU-vaatimustenmukaisuusvakuutuksen täysimittainen teksti on saatavilla seuraavassa internetosoitteessa:
https://www.denso.com/global/en/contact-us/doc/

Hierbij verklaar ik, DENSO CORPORATION, dat het type radioapparatuur conform is met Richtlijn 2014/53/EU.
De volledige tekst van de EU-conformiteitsverklaring kan worden geraadpleegd op het volgende internetadres:
https://www.denso.com/global/en/contact-us/doc/

Le soussigné, DENSO CORPORATION, déclare que l'équipement radioélectrique du type est conforme à la directive 2014/53/UE.
Le texte complet de la déclaration UE de conformité est disponible à l'adresse internet suivante:
https://www.denso.com/global/en/contact-us/doc/

Härmed försäkrar DENSO CORPORATION att denna typ av radioutrustning överensstämmer med direktiv 2014/53/EU.
Den fullständiga texten till EU-försäkran om överensstämmelse finns på följande webbadress:
https://www.denso.com/global/en/contact-us/doc/

D00920

Hermed erklærer DENSO CORPORATION, at radioudstyrstypen er i overensstemmelse med direktiv 2014/53/EU.
EU-overensstemmelseserklæringens fulde tekst kan findes på følgende internetadresse:
https://www.denso.com/global/en/contact-us/doc/

Hiermit erklärt DENSO CORPORATION, dass der Funkanlagentyp der Richtlinie 2014/53/EU entspricht.
Der vollständige Text der EU-Konformitätserklärung ist unter der folgenden Internetadresse verfügbar:
https://www.denso.com/global/en/contact-us/doc/

Με την παρούσα ο/η DENSO CORPORATION, δηλώνει ότι ο ραδιοεξοπλισμός πληροί την οδηγία 2014/53/ΕΕ.
Το πλήρες κείμενο της δήλωσης συμμόρφωσης ΕΕ διατίθεται στην ακόλουθη ιστοσελίδα στο διαδίκτυο:
https://www.denso.com/global/en/contact-us/doc/

Il fabbricante, DENSO CORPORATION, dichiara che il tipo di apparecchiatura radio è conforme alla direttiva 2014/53/UE.
Il testo completo della dichiarazione di conformità UE è disponibile al seguente indirizzo Internet:
https://www.denso.com/global/en/contact-us/doc/

Por la presente, DENSO CORPORATION declara que el tipo de equipo radioeléctrico es conforme con la Directiva 2014/53/UE.
El texto completo de la declaración UE de conformidad está disponible en la dirección Internet siguiente:
https://www.denso.com/global/en/contact-us/doc/

D00921

O(a) abaixo assinado(a) DENSO CORPORATION declara
que o presente tipo de equipamento de rádio está em conformidade
com a Diretiva 2014/53/UE.
O texto integral da declaração de conformidade está disponível
no seguinte endereço de Internet:
https://www.denso.com/global/en/contact-us/doc/

B'dan, DENSO CORPORATION, niddikjara li dan it-tip ta'
tagħmir tar-radju huwa konformi mad-Direttiva 2014/53/UE.
It-test kollu tad-dikjarazzjoni ta' konformità tal-UE huwa
disponibbli f'dan l-indirizz tal-Internet li ġej:
https://www.denso.com/global/en/contact-us/doc/

Käesolevaga deklareerib DENSO CORPORATION, et
käesolev raadioseadme tüüp vastab direktiivi 2014/53/EL nõuetele.
ELi vastavusdeklaratsiooni täielik tekst on kättesaadav järgmisel
internetiaadressil:
https://www.denso.com/global/en/contact-us/doc/

DENSO CORPORATION igazolja, hogy a típusú
rádióberendezés megfelel a 2014/53/EU irányelvnek.
Az EU-megfelelőségi nyilatkozat teljes szövege elérhető a következő
internetes címen:
https://www.denso.com/global/en/contact-us/doc/

DENSO CORPORATION týmto vyhlasuje, že rádiové
zariadenie typu je v súlade so smernicou 2014/53/EÚ.
Úplné EÚ vyhlásenie o zhode je k dispozícii na tejto internetovej
adrese:
https://www.denso.com/global/en/contact-us/doc/

D00922

Tímto DENSO CORPORATION prohlašuje, že typ
rádiového zařízení je v souladu se směrnicí 2014/53/EU.
Úplné znění EU prohlášení o shodě je k dispozici na této
internetové adrese:
https://www.denso.com/global/en/contact-us/doc/

DENSO CORPORATION potrjuje, da je tip radijske opreme
skladen z Direktivo 2014/53/EU.
Celotno besedilo izjave EU o skladnosti je na voljo na naslednjem
spletnem naslovu:
https://www.denso.com/global/en/contact-us/doc/

Aš, DENSO CORPORATION, patvirtinu, kad radijo įrenginių
tipas atitinka Direktyvą 2014/53/ES.
Visas ES atitikties deklaracijos tekstas prieinamas šiuo interneto
adresu:
https://www.denso.com/global/en/contact-us/doc/

Ar šo DENSO CORPORATION deklarē, ka radioiekārta
atbilst Direktīvai 2014/53/ES.
Pilns ES atbilstības deklarācijas teksts ir pieejams šādā interneta
vietnē:
https://www.denso.com/global/en/contact-us/doc/

DENSO CORPORATION niniejszym oświadcza, że typ
urządzenia radiowego jest zgodny z dyrektywą 2014/53/UE.
Pełny tekst deklaracji zgodności UE jest dostępny pod następującym
adresem internetowym:
https://www.denso.com/global/en/contact-us/doc/

D00923

Hér með lýsir DENSO CORPORATION yfir því að er í
samræmi við grunnkröfur og aðrar kröfur, sem gerðar eru í tilskipun
2014/53/EU.
Samræmisyfirlýsing er einnig aðgengileg á eftirfarandi vefslóð:
https://www.denso.com/global/en/contact-us/doc/

DENSO CORPORATION erklærer at er i overensstemmelse
med direktiv 2014/53/EU.
Samsvarserklæringen i fulltekst er tilgjengelig på følgende
internettadresse:
https://www.denso.com/global/en/contact-us/doc/

С настоящото DENSO CORPORATION декларира, че
този тип радиосъоръжение е в съответствие с Директива
2014/53/ЕС.
Цялостният текст на ЕС декларацията за съответствие
може да се намери на следния интернет адрес:
https://www.denso.com/global/en/contact-us/doc/

Prin prezenta, DENSO CORPORATION declară că tipul
de echipamente radio este în conformitate cu Directiva 2014/53/UE.
Textul integral al declarației UE de conformitate este disponibil la
următoarea adresă internet:
https://www.denso.com/global/en/contact-us/doc/

DENSO CORPORATION ovime izjavljuje da je radijska
oprema tipa u skladu s Direktivom 2014/53/EU.
Cjeloviti tekst EU izjave o sukladnosti dostupan je na sljedećoj
internetskoj adresi:
https://www.denso.com/global/en/contact-us/doc/

D00924

– CONTINUED –

Овиме, DENSO CORPORATION изјављује да је радио опрема тип усаглашена са Директивом 2014/53/EU.
Цео текст ЕУ декларације о усаглашености доступам је на следећој интернет адреси:
https://www.denso.com/global/en/contact-us/doc/

Amb aquest document, DENSO CORPORATION declara que el tipus d'equipament radioelèctric es conforme a la Directiva 2014/53/UE.
El text complet de la declaració UE de conformitat està disponible en la següent adreça d'Internet:
https://www.denso.com/global/en/contact-us/doc/

İşbu belge; DENSO CORPORATION telsiz ekipmanı tipinin 2014/53/AB sayılı Direktif'e uygun olduğunu beyan eder.
AB uygunluk beyanının tam metni aşağıdaki internet adresinde mevcuttur:
https://www.denso.com/global/en/contact-us/doc/

Me anë të kësaj deklaratë, subjekti DENSO CORPORATION deklaron se pajisjet radio është në përputhje me këtë rregull teknik për pajisjet radio dhe fundore të komunikimeve elektronike.
Teksti i plotë i Deklaratës së Konformitetit është i disponueshëm në adresën e mëposhtme të internetit:
https://www.denso.com/global/en/contact-us/doc/

Prin prezenta, DENSO CORPORATION declară că tipul de echipamente radio este în conformitate cu Reglementarea tehnică „Punerea la dispoziție pe piață a echipamentelor radio".
Textul integral al declarației de conformitate este disponibil la următoarea adresă de Internet:
https://www.denso.com/global/en/contact-us/doc/

D01217

справжнім DENSO CORPORATION заявляє, що тип радіообладнання відповідає Технічному регламенту радіообладнання;
повний текст декларації про відповідність доступний на веб-сайті за такою адресою:
https://www.denso.com/global/en/contact-us/doc/

The latest "DECLARATION of CONFORMITY" (DoC) is available at the following address:
https://www.denso.com/global/en/contact-us/doc/

D00926

Immobilizer

Hereby, SUBARU CORPORATION declares that the radio equipment type SSPIMB02 is in compliance with Directive 2014/53/EU.

The full text of the EU declaration of conformity is available at the following internet address:
http://www.tokai-rika.co.jp/pc/

Frequency band: 119 - 135 kHz
Maximum radio-frequency power: 55 dBμA/m @10m

SUBARU CORPORATION vakuuttaa, että radiolaitetyyppi SSPIMB02 on direktiivin 2014/53/EU mukainen.

EU-vaatimustenmukaisuusvakuutuksen täysimittainen teksti on saatavilla seuraavassa internetosoitteessa:
http://www.tokai-rika.co.jp/pc/

Radiotaajuus: 119 - 135 kHz
suurin mahdollinen lähetysteho: 55 dBμA/m @10m

Hierbij verklaar ik, SUBARU CORPORATION, dat het type radioapparatuur SSPIMB02 conform is met Richtlijn 2014/53/EU.

De volledige tekst van de EU-conformiteitsverklaring kan worden geraadpleegd op het volgende internetadres:
http://www.tokai-rika.co.jp/pc/

Frequentieband: 119 - 135 kHz
Maximaal radiofrequentievermogen: 55 dBμA/m @10m

Le soussigné, SUBARU CORPORATION, déclare que l'équipement radioélectrique du type SSPIMB02 est conforme à la directive 2014/53/UE.

Le texte complet de la déclaration UE de conformité est disponible à l'adresse internet suivante:
http://www.tokai-rika.co.jp/pc/

Bande de fréquences: 119 - 135 kHz
Puissance de radiofréquence maximale: 55 dBμA/m @10m

Härmed försäkrar SUBARU CORPORATION att denna typ av radioutrustning SSPIMB02 överensstämmer med direktiv 2014/53/EU.

Den fullständiga texten till EU-försäkran om överensstämmelse finns på följande webbadress:
http://www.tokai-rika.co.jp/pc/

Frekvensband: 119 - 135 kHz
Maximal radiofrekvenseffekt: 55 dBμA/m @10m

D01018

Hermed erklærer SUBARU CORPORATION, at radioudstyrstypen SSPIMB02 er i overensstemmelse med direktiv 2014/53/EU.

EU-overensstemmelseserklæringens fulde tekst kan findes på følgende internetadresse:
http://www.tokai-rika.co.jp/pc/

Frekvensbånd: 119 - 135 kHz

Maksimal radiofrekvenseffekt: 55 dBµA/m @10m

Hiermit erklärt SUBARU CORPORATION, dass der Funkanlagentyp SSPIMB02 der Richtlinie 2014/53/EU entspricht.

Der vollständige Text der EU-Konformitätserklärung ist unter der folgenden Internetadresse verfügbar:
http://www.tokai-rika.co.jp/pc/

Frequenzband: 119 - 135 kHz

Abgestrahlte maximale Sendeleistung: 55 dBµA/m @10m

Με την παρούσα ο/η SUBARU CORPORATION, δηλώνει ότι ο ραδιοεξοπλισμός SSPIMB02 πληροί την οδηγία 2014/53/ΕΕ.

Το πλήρες κείμενο της δήλωσης συμμόρφωσης ΕΕ διατίθεται στην ακόλουθη ιστοσελίδα στο διαδίκτυο:
http://www.tokai-rika.co.jp/pc/

Ζώνη συχνοτήτων: 119 - 135 kHz

Μέγιστη ισχύς ραδιοσυχνότητας: 55 dBµA/m @10m

Il fabbricante, SUBARU CORPORATION, dichiara che il tipo di apparecchiatura radio SSPIMB02 è conforme alla direttiva 2014/53/UE.

Il testo completo della dichiarazione di conformità UE è disponibile al seguente indirizzo Internet:
http://www.tokai-rika.co.jp/pc/

Banda di frequenza: 119 - 135 kHz

Potenza massima radiofrequenza: 55 dBµA/m @10m

Por la presente, SUBARU CORPORATION declara que el tipo de equipo radioeléctrico SSPIMB02 es conforme con la Directiva 2014/53/UE.

El texto completo de la declaración UE de conformidad está disponible en la dirección Internet siguiente:
http://www.tokai-rika.co.jp/pc/

Banda de frecuencia: 119 - 135 kHz

Potencia máxima de radiofrecuencia: 55 dBµA/m @10m

D01019

O(a) abaixo assinado(a) SUBARU CORPORATION declara que o presente tipo de equipamento de rádio SSPIMB02 está em conformidade com a Diretiva 2014/53/UE.

O texto integral da declaração de conformidade está disponível no seguinte endereço de Internet:
http://www.tokai-rika.co.jp/pc/

Banda de frequência: 119 - 135 kHz

Potência máxima de radiofrequências: 55 dBµA/m @10m

B'dan, SUBARU CORPORATION, niddikjara li dan it-tip ta' tagħmir tar-radju SSPIMB02 huwa konformi mad-Direttiva 2014/53/UE.

It-test kollu tad-dikjarazzjoni ta' konformità tal-UE huwa disponibbli f'dan l-indirizz tal-Internet li ġej:
http://www.tokai-rika.co.jp/pc/

Tiċċisviġġ: 119 - 135 kHz

Ħaġmarks ġġenerat bil-ġġenerazzjoni: 55 dBµA/m @10m

Kaesolevaga deklareerib SUBARU CORPORATION, et kaesolev raadioseadme tüüp SSPIMB02 vastab direktiivi 2014/53/EL nõuetele.

ELi vastavusdeklaratsiooni täielik tekst on kättesaadav järgmisel internetiaadressil:
http://www.tokai-rika.co.jp/pc/

Sagedusriba: 119 - 135 kHz

Maksimaalne saatevõimsus: 55 dBµA/m @10m

SUBARU CORPORATION igazolja, hogy a SSPIMB02 típusú rádióberendezés megfelel a 2014/53/EU irányelvnek.

Az EU-megfelelőségi nyilatkozat teljes szövege elérhető a következő internetes címen:
http://www.tokai-rika.co.jp/pc/

Frekvenciasáv: 119 - 135 kHz

Maximális jelerősség: 55 dBµA/m @10m

SUBARU CORPORATION týmto vyhlasuje, že rádiové zariadenie typu SSPIMB02 je v súlade so smernicou 2014/53/EÚ.

Úplné EÚ vyhlásenie o zhode je k dispozícii na tejto internetovej adrese:
http://www.tokai-rika.co.jp/pc/

Frekvenčné pásmo: 119 - 135 kHz

Maximálny rádiofrekvenčný výkon: 55 dBµA/m @10m

D01020

Tímto SUBARU CORPORATION prohlašuje, že typ rádiového zařízení SSPIMB02 je v souladu se směrnicí 2014/53/EU.

Úplné znění EU prohlášení o shodě je k dispozici na této internetové adrese:
http://www.tokai-rika.co.jp/pc/

Kmitočtové pásmo: 119 - 135 kHz

Maximální radiofrekvenční výkon: 55 dBµA/m @10m

SUBARU CORPORATION potrjuje, da je tip radijske opreme SSPIMB02 skladen z Direktivo 2014/53/EU.

Celotno besedilo izjave EU o skladnosti je na voljo na naslednjem spletnem naslovu:
http://www.tokai-rika.co.jp/pc/

Frekvenčni pas: 119 - 135 kHz

Največja moč radijske frekvence: 55 dBµA/m @10m

Aš, SUBARU CORPORATION, patvirtinu, kad radijo įrenginių tipas SSPIMB02 atitinka Direktyvą 2014/53/ES.

Visas ES atitikties deklaracijos tekstas prieinamas šiuo interneto adresu:
http://www.tokai-rika.co.jp/pc/

Dažnių juosta: 119 - 135 kHz

Didžiausia radijo dažnių galia: 55 dBµA/m @10m

Ar šo SUBARU CORPORATION deklarē, ka radioiekārta SSPIMB02 atbilst Direktīvai 2014/53/ES.

Pilns ES atbilstības deklarācijas teksts ir pieejams šādā interneta vietnē:
http://www.tokai-rika.co.jp/pc/

Frekvenču josla: 119 - 135 kHz

Maksimālā radiofrekvenču jauda: 55 dBµA/m @10m

SUBARU CORPORATION niniejszym oświadcza, że typ urządzenia radiowego SSPIMB02 jest zgodny z dyrektywą 2014/53/UE.

Pełny tekst deklaracji zgodności UE jest dostępny pod następującym adresem internetowym:
http://www.tokai-rika.co.jp/pc/

Zakres częstotliwości: 119 - 135 kHz

Maksymalna moc częstotliwości radiowej: 55 dBµA/m @10m

D01021

– CONTINUED –

SUBARU CORPORATION lýsir því hér með yfir að fjarskiptatækið af gerð SSPIMB02 er í samræmi við tilskipun 2014/53/ESB.

Öll ESB-samræmisyfirlýsingin er tiltæk á eftirfarandi vefslóð:
http://www.tokai-rika.co.jp/pc/

Tíðnisvið: 119 - 135 kHz

Hámarks útvarpsbylgjutíðni: 55 dBµA/m @10m

SUBARU CORPORATION erklærer herved at radioutstyrstypen SSPIMB02 er i samsvar med direktivet 2014/53/EU.

Hele teksten av EU-samsvarserklæringen kan leses på det følgende nettstedet:
http://www.tokai-rika.co.jp/pc/

Frekvensbånd: 119 - 135 kHz

Maksimal radiofrekvenseffekt: 55 dBµA/m @10m

С настоящото SUBARU CORPORATION декларира, че този тип радиосъоръжение SSPIMB02 е в съответствие с Директива 2014/53/ЕС.

Цялостният текст на ЕС декларацията за съответствие може да се намери на следния интернет адрес:
http://www.tokai-rika.co.jp/pc/

Радиочестотна лента: 119 - 135 kHz

Максимална радиочестотна мощност: 55 dBµA/m @10m

Prin prezenta, SUBARU CORPORATION declară că tipul de echipamente radio SSPIMB02 este în conformitate cu Directiva 2014/53/UE.

Textul integral al declarației UE de conformitate este disponibil la următoarea adresă internet:
http://www.tokai-rika.co.jp/pc/

Banda de frecvență: 119 - 135 kHz

Puterea maximă de radiofrecvență: 55 dBµA/m @10m

Ovime SUBARU CORPORATION potvrđuje da je radio-oprema tipa SSPIMB02 u skladu sa Direktivom 2014/53/EU.

Potpuni tekst EU deklaracije o usaglašenosti dostupan je na slijedećoj internet adresi:
http://www.tokai-rika.co.jp/pc/

Frekvencijski opseg: 119 - 135 kHz

Maksimalna radio-frekvencijska snaga: 55 dBµA/m @10m

D01022

Me anë të këtij dokumenti, SUBARU CORPORATION deklaron se tipi i radiopajisjes SSPIMB02 është në përputhje me Direktivën 2014/53/EU.

Teksti i plotë i deklaratës së konformitetit të Bashkimit Evropian është i disponueshëm në adresën e mëposhtme të internetit:
http://www.tokai-rika.co.jp/pc/

Brezi i frekuencës: 119 - 135 kHz

Fuqia maksimale e radiofrekuencës: 55 dBµA/m @10m

SUBARU CORPORATION ovime izjavljuje da je radijska oprema tipa SSPIMB02 u skladu s Direktivom 2014/53/EU.

Cjeloviti tekst EU izjave o sukladnosti dostupan je na sljedećoj internetskoj adresi:
http://www.tokai-rika.co.jp/pc/

Frekvencijski pojas: 119 - 135 kHz

Maksimalna RF snaga: 55 dBµA/m @10m

Ovim SUBARU CORPORATION potvrđuje da je radio-oprema tipa SSPIMB02 u skladu sa Direktivom 2014/53/EU.

Potpuni tekst EU deklaracije o usaglašenosti dostupan je na sledećoj internet adresi:
http://www.tokai-rika.co.jp/pc/

Frekventni opseg: 119 - 135 kHz

Maksimalna radio frekventna snaga: 55 dBµA/m @10m

SUBARU CORPORATION, işbu belgeyle telsiz cihazı türünün SSPIMB02 2014/53/EU nolu Direktif ile uyumlu olduğunu beyan etmektedir.

AB uygunluk beyanının tam metnine aşağıdaki internet adresinden ulaşabilirsiniz:
http://www.tokai-rika.co.jp/pc/

Frekans bandı: 119 - 135 kHz

Maksimum radyo frekans gücü: 55 dBµA/m @10m

D01023

Справжнім SUBARU CORPORATION заявляє, що тип радіообладнання SSPIMB02 відповідає Технічному регламенту радіообладнання;
КАБІНЕТ МІНІСТРІВ УКРАЇНИ ПОСТАНОВА №.355

Повний текст декларації про відповідність доступний на веб-сайті за такою адресою:
http://www.tokai-rika.co.jp/pc/

Діапазон частот : 119 - 135 kHz
Максимальна потужність радіочастотного випромінювання : 55dBµA/m @10m

Адреса: 1-1, Subaru-cho, Ota-shi, Gunma 373-8555 JAPAN

D01024

Address: 1-1, Subaru-cho, Ota-shi, Gunma 373-8555, Japan

■ Tire Pressure Monitoring System

▼ Receiver

Frequency band(s) in which the radio equipment operates: 433.92 MHz.

Manufacturer: SUBARU CORPORATION

Address: 1-1, Subaru-cho, Ota-shi, Gun-ma-ken, 373-8555, Japan

CE

Діапазон радіочастот, в якому працює устаткування: 433,92 МГц.

[EN] English	Hereby, ALPS ELECTRIC CO.,LTD., declares that the radio equipment type TD1G141 is in compliance with Directive 2014/53/EU. The full text of the EU declaration of conformity is available at the following internet address: https://www.alps.com/products/common/pdf/Tuner/TD1G141.pdf
[BG] Bulgarian	С настоящото ALPS ELECTRIC CO.,LTD., декларира, че този тип радиосъоръжение TD1G141 е в съответствие с Директива 2014/53/ЕС. Цялостният текст на ЕС декларацията за съответствие може да се намери на следния интернет адрес: https://www.alps.com/products/common/pdf/Tuner/TD1G141.pdf
[CS] Czech	Tímto ALPS ELECTRIC CO.,LTD., prohlašuje, že typ rádiového zařízení TD1G141 je v souladu se směrnicí 2014/53/EU. Úplné znění EU prohlášení o shodě je k dispozici na této internetové adrese: https://www.alps.com/products/common/pdf/Tuner/TD1G141.pdf
[DA] Danish	Hermed erklærer ALPS ELECTRIC CO.,LTD., at radioudstyrstypen TD1G141 er i overensstemmelse med direktiv 2014/53/EU. EU-overensstemmelseserklæringens fulde tekst kan findes på følgende internetadresse: https://www.alps.com/products/common/pdf/Tuner/TD1G141.pdf
[DE] German	Hiermit erklärt ALPS ELECTRIC CO.,LTD., dass der Funkanlagentyp TD1G141 der Richtlinie 2014/53/EU entspricht. Der vollständige Text der EU-Konformitätserklärung ist unter der folgenden Internetadresse verfügbar: https://www.alps.com/products/common/pdf/Tuner/TD1G141.pdf
[ET] Estonian	Käesolevaga deklareerib ALPS ELECTRIC CO.,LTD., et käesolev raadioseadme tüüp TD1G141 vastab direktiivi 2014/53/EL nõuetele. ELi vastavusdeklaratsiooni täielik tekst on kättesaadav järgmisel internetiaadressil: https://www.alps.com/products/common/pdf/Tuner/TD1G141.pdf

D00859

– CONTINUED –

[EL] Greek	Με την παρούσα ο/η ALPS ELECTRIC CO.,LTD., δηλώνει ότι ο ραδιοεξοπλισμός TD1G141 πληροί την οδηγία 2014/53/ΕΕ. Το πλήρες κείμενο της δήλωσης συμμόρφωσης ΕΕ διατίθεται στην ακόλουθη ιστοσελίδα στο διαδίκτυο: https://www.alps.com/products/common/pdf/Tuner/TD1G141.pdf
[ES] Spanish	Por la presente, ALPS ELECTRIC CO.,LTD., declara que el tipo de equipo radioeléctrico TD1G141 es conforme con la Directiva 2014/53/UE. El texto completo de la declaración UE de conformidad está disponible en la dirección Internet siguiente: https://www.alps.com/products/common/pdf/Tuner/TD1G141.pdf
[FR] French	Le soussigné, ALPS ELECTRIC CO.,LTD., déclare que l'équipement radioélectrique du type TD1G141 est conforme à la directive 2014/53/UE. Le texte complet de la déclaration UE de conformité est disponible à l'adresse internet suivante: https://www.alps.com/products/common/pdf/Tuner/TD1G141.pdf
[IT] Italian	Il fabbricante, ALPS ELECTRIC CO.,LTD., dichiara che il tipo di apparecchiatura radio TD1G141 è conforme alla direttiva 2014/53/UE. Il testo completo della dichiarazione di conformità UE è disponibile al seguente indirizzo Internet: https://www.alps.com/products/common/pdf/Tuner/TD1G141.pdf
[LV] Latvian	Ar šo ALPS ELECTRIC CO.,LTD., deklarē, ka radioiekārta TD1G141 atbilst Direktīvai 2014/53/ES. Pilns ES atbilstības deklarācijas teksts ir pieejams šādā interneta vietnē: https://www.alps.com/products/common/pdf/Tuner/TD1G141.pdf
[LT] Lithuanian	Aš, ALPS ELECTRIC CO.,LTD., patvirtinu, kad radijo įrenginių tipas TD1G141 atitinka Direktyvą 2014/53/ES. Visas ES atitikties deklaracijos tekstas prieinamas šiuo interneto adresu: https://www.alps.com/products/common/pdf/Tuner/TD1G141.pdf

D00860

[HR] Croatian	ALPS ELECTRIC CO.,LTD., ovime izjavljuje da je radijska oprema tipa TD1G141 u skladu s Direktivom 2014/53/EU. Cjeloviti tekst EU izjave o sukladnosti dostupan je na sljedećoj internetskoj adresi: https://www.alps.com/products/common/pdf/Tuner/TD1G141.pdf
[HU] Hungarian	ALPS ELECTRIC CO.,LTD., igazolja, hogy a TD1G141 típusú rádióberendezés megfelel a 2014/53/EU irányelvnek. Az EU-megfelelőségi nyilatkozat teljes szövege elérhető a következő internetes címen: https://www.alps.com/products/common/pdf/Tuner/TD1G141.pdf
[MT] Maltese	B'dan, ALPS ELECTRIC CO.,LTD., niddikjara li dan it-tip ta' tagħmir tar-radju TD1G141 huwa konformi mad-Direttiva 2014/53/UE. It-test kollu tad-dikjarazzjoni ta' konformità tal-UE huwa disponibbli f'dan l-indirizz tal-Internet li ġej: https://www.alps.com/products/common/pdf/Tuner/TD1G141.pdf
[NL] Dutch	Hierbij verklaar ik, ALPS ELECTRIC CO.,LTD., dat het type radioapparatuur TD1G141 conform is met Richtlijn 2014/53/EU. De volledige tekst van de EU-conformiteitsverklaring kan worden geraadpleegd op het volgende internetadres: https://www.alps.com/products/common/pdf/Tuner/TD1G141.pdf
[PL] Polish	ALPS ELECTRIC CO.,LTD., niniejszym oświadcza, że typ urządzenia radiowego TD1G141 jest zgodny z dyrektywą 2014/53/UE. Pełny tekst deklaracji zgodności UE jest dostępny pod następującym adresem internetowym: https://www.alps.com/products/common/pdf/Tuner/TD1G141.pdf
[PT] Portuguese	O(a) abaixo assinado(a) ALPS ELECTRIC CO.,LTD., declara que o presente tipo de equipamento de rádio TD1G141 está em conformidade com a Diretiva 2014/53/UE. O texto integral da declaração de conformidade está disponível no seguinte endereço de Internet: https://www.alps.com/products/common/pdf/Tuner/TD1G141.pdf

D00861

– CONTINUED –

[RO] Romanian	Prin prezenta, ALPS ELECTRIC CO.,LTD., declară că tipul de echipamente radio TD1G141 este în conformitate cu Directiva 2014/53/UE. Textul integral al declarației UE de conformitate este disponibil la următoarea adresă internet: https://www.alps.com/products/common/pdf/Tuner/TD1G141.pdf
[SK] Slovak	ALPS ELECTRIC CO.,LTD., týmto vyhlasuje, že rádiové zariadenie typu TD1G141 je v súlade so smernicou 2014/53/EÚ. Úplné EÚ vyhlásenie o zhode je k dispozícii na tejto internetovej adrese: https://www.alps.com/products/common/pdf/Tuner/TD1G141.pdf
[SL] Slovenian	ALPS ELECTRIC CO.,LTD., potrjuje, da je tip radijske opreme TD1G141 skladen z Direktivo 2014/53/EU. Celotno besedilo izjave EU o skladnosti je na voljo na naslednjem spletnem naslovu: https://www.alps.com/products/common/pdf/Tuner/TD1G141.pdf
[FI] Finish	ALPS ELECTRIC CO.,LTD., vakuuttaa, että radiolaitetyyppi TD1G141 on direktiivin 2014/53/EU mukainen. EU-vaatimustenmukaisuusvakuutuksen täysimittainen teksti on saatavilla seuraavassa internetosoitteessa: https://www.alps.com/products/common/pdf/Tuner/TD1G141.pdf
[SV] Swedish	Härmed försäkrar ALPS ELECTRIC CO.,LTD., att denna typ av radioutrustning TD1G141 överensstämmer med direktiv 2014/53/EU. Den fullständiga texten till EU-försäkran om överensstämmelse finns på följande webbadress: https://www.alps.com/products/common/pdf/Tuner/TD1G141.pdf
[IS] Icelandic	Hér, ALPS ELECTRIC CO.,LTD., lýsir yfir að radíóbúnaður tegund TD1G141 er í samræmi við tilskipun 2014/53/ESB. The fullur texti af ESB-samræmisyfirlýsing er í boði á eftirfarandi veffangi: https://www.alps.com/products/common/pdf/Tuner/TD1G141.pdf

D00862

[NO] Norwegian	Herved ALPS ELECTRIC CO.,LTD., erklærer at radioutstyr type TD1G141 er i samsvar med direktiv 2014/53/EU. Den fullstendige teksten i EU-erklæring er tilgjengelig på følgende internettadresse: https://www.alps.com/products/common/pdf/Tuner/TD1G141.pdf
[GLE] Irish	Dearbhaíonn ALPS ELECTRIC CO.,LTD. leis seo go bhfuil an cineál trealaimh raidió TD1G141 in oiriúint le Treoir 2014/53/AE. Tá téacs iomlán an Dearbhaithe Comhréireachta AE le fáil ag an seoladh Idirlín seo a leanas: https://www.alps.com/products/common/pdf/Tuner/TD1G141.pdf
[LTZ] Luxembourgish	Heimatter deklaréiert ALPS ELECTRIC CO.,LTD., datt d'Funkanlage vum Typ TD1G141 konform mat der Direktiv 2014/53/EU sinn. Den integralen Text vun der EU-Konformitéitserklärung ass op folgender Internetadress ze fannen: https://www.alps.com/products/common/pdf/Tuner/TD1G141.pdf
[UA] Ukrainian	Цією декларацією ALPS ELECTRIC CO., LTD. заявляє, що тип радіообладнання TD1G141 відповідає Технічному регламенту радіообладнання; повний текст декларації про відповідність доступний на веб-сайті за такою адресою: https://www.alps.com/products/common/pdf/ukraine/Tuner/TD1G141.pdf

D00874

– CONTINUED –

▼ Transmitter

English	EN	Manufacturer : Schrader Electronics Ltd. Address : 11 Technology Park, Belfast Road, Antrim BT41 1QS, Northern Ireland United Kingdom Model No. : SHR3 Frequency : 433.92 MHz Power : −23.1dBm Hereby, Schrader Electronics Ltd. declares that the radio equipment type SHR3 is in compliance with Directive 2014/53/EU. The full text of the EU declaration of conformity is available at the following internet address: http://www.tpmseuroshop.com/documents/declaration_conformities
Bulgarian	BG	С настоящото Schrader Electronics Ltd. декларира, че този тип радиосъоръжение SHR3 е в съответствие с Директива 2014/53/ЕС. Цялостният текст на ЕС декларацията за съответствие може да се намери на следния интернет адрес: http://www.tpmseuroshop.com/documents/declaration_conformities
Spanish	ES	Por la presente, Schrader Electronics Ltd. declara que el tipo de equipo radioeléctrico SHR3 es conforme con la Directiva 2014/53/UE. El texto completo de la declaración UE de conformidad está disponible en la dirección Internet siguiente: http://www.tpmseuroshop.com/documents/declaration_conformities
Croatian	HR	Schrader Electronics Ltd. ovime izjavljuje da je radijska oprema tipa SHR3 u skladu s Direktivom 2014/53/EU. Cjeloviti tekst EU izjave o sukladnosti dostupan je na sljedećoj internetskoj adresi: http://www.tpmseuroshop.com/documents/declaration_conformities
Czech	CS	Tímto Schrader Electronics Ltd. prohlašuje, že typ rádiového zařízení SHR3 je v souladu se směrnicí 2014/53/EU. Úplné znění EU prohlášení o shodě je k dispozici na této internetové adrese: http://www.tpmseuroshop.com/documents/declaration_conformities

D00694

Danish	DA	Hermed erklærer Schrader Electronics Ltd., at radioudstyrstypen SHR3 er i overensstemmelse med direktiv 2014/53/EU. EU-overensstemmelseserklæringens fulde tekst kan findes på følgende internetadresse: http://www.tpmseuroshop.com/documents/declaration_conformities
Dutch	NL	Hierbij verklaar ik, Schrader Electronics Ltd., dat het type radioapparatuur SHR3 conform is met Richtlijn 2014/53/EU. De volledige tekst van de EU-conformiteitsverklaring kan worden geraadpleegd op het volgende internetadres: http://www.tpmseuroshop.com/documents/declaration_conformities
German	DE	Hiermit erklärt Schrader Electronics Ltd., dass der Funkanlagentyp SHR3 der Richtlinie 2014/53/EU entspricht. Der vollständige Text der EU-Konformitätserklärung ist unter der folgenden Internetadresse verfügbar: http://www.tpmseuroshop.com/documents/declaration_conformities
Estonian	ET	Käesolevaga deklareerib Schrader Electronics Ltd., et käesolev raadioseadme tüüp SHR3 vastab direktiivi 2014/53/EL n õuetele. ELi vastavusdeklaratsiooni täielik tekst on kättesaadav järgmisel internetiaadressil: http://www.tpmseuroshop.com/documents/declaration_conformities
Finish	FI	Schrader Electronics Ltd. vakuuttaa, että radiolaitetyyppi SHR3 on direktiivin 2014/53/EU mukainen. EU-vaatimustenmukaisuusvakuutuksen täysimittainen teksti on saatavilla seuraavassa internetosoitteessa: http://www.tpmseuroshop.com/documents/declaration_conformities

D00695

– CONTINUED –

French	FR	Le soussigné, Schrader Electronics Ltd., déclare que l'équipement radioélectrique du type SHR3 est conforme à la directive 2014/53/UE. Le texte complet de la déclaration UE de conformité est disponible à l'adresse internet suivante: http://www.tpmseuroshop.com/documents/declaration_conformities
Greek	EL	Με την παρούσα ο/η Schrader Electronics Ltd., δηλώνει ότι ο ραδιοεξοπλισμός SHR3 πληροί την οδηγία 2014/53/ΕΕ. Το πλήρες κείμενο της δήλωσης συμμόρφωσης ΕΕ διατίθεται στην ακόλουθη ιστοσελίδα στο διαδίκτυο: http://www.tpmseuroshop.com/documents/declaration_conformities
Hungarian	HU	Schrader Electronics Ltd. igazolja, hogy a SHR3 típusú rádióberendezés megfelel a 2014/53/EU irányelvnek. Az EU-megfelelőségi nyilatkozat teljes szövege elérhető a következő internetes címen: http://www.tpmseuroshop.com/documents/declaration_conformities
Italian	IT	Il fabbricante, Schrader Electronics Ltd., dichiara che il tipo di apparecchiatura radio SHR3 è conforme alla direttiva 2014/53/UE. Il testo completo della dichiarazione di conformità UE è disponibile al seguente indirizzo Internet: http://www.tpmseuroshop.com/documents/declaration_conformities
Latvian	LV	Ar šo Schrader Electronics Ltd. deklare, ka radioiekarta SHR3 atbilst Direktīvai 2014/53/ES. Pilns ES atbilstības deklarācijas teksts ir pieejams šāda interneta vietne: http://www.tpmseuroshop.com/documents/declaration_conformities
Lithuanian	LT	Aš, Schrader Electronics Ltd., patvirtinu, kad radijo įrenginių tipas SHR3 atitinka Direktyvą 2014/53/ES. Visas ES atitikties deklaracijos tekstas prieinamas šiuo interneto adresu: http://www.tpmseuroshop.com/documents/declaration_conformities

D00696

Maltese	MT	B'dan, Schrader Electronics Ltd., niddikjara li dan it-tip ta' tagħmir tar-radju SHR3 huwa konformi mad-Direttiva 2014/53/UE. It-test kollu tad-dikjarazzjoni ta' konformità tal-UE huwa disponibbli f'dan l-indirizz tal-Internet li ġej: http://www.tpmseuroshop.com/documents/declaration_conformities
Polish	PL	Schrader Electronics Ltd. niniejszym oświadcza, że typ urządzenia radiowego SHR3 jest zgodny z dyrektywą 2014/53/UE. Pełny tekst deklaracji zgodności UE jest dostępny pod następującym adresem internetowym: http://www.tpmseuroshop.com/documents/declaration_conformities
Portuguese	PT	O(a) abaixo assinado(a) Schrader Electronics Ltd. declara que o presente tipo de equipamento de rádio SHR3 está em conformidade com a Diretiva 2014/53/UE. O texto integral da declaração de conformidade está disponível no seguinte endereço de Internet: http://www.tpmseuroshop.com/documents/declaration_conformities
Romanian	RO	Prin prezenta, Schrader Electronics Ltd. declară că tipul de echipamente radio SHR3 este în conformitate cu Directiva 2014/53/UE. Textul integral al declarației UE de conformitate este disponibil la următoarea adresă internet: http://www.tpmseuroshop.com/documents/declaration_conformities
Slovak	SK	Schrader Electronics Ltd. týmto vyhlasuje, že rádiové zariadenie typu SHR3 je v súlade so smernicou 2014/53/EÚ. Úplné EÚ vyhlásenie o zhode je k dispozícii na tejto internetovej adrese: http://www.tpmseuroshop.com/documents/declaration_conformities
Slovenian	SL	Schrader Electronics Ltd. potrjuje, da je tip radijske opreme SHR3 skladen z Direktivo 2014/53/EU. Celotno besedilo izjave EU o skladnosti je na naslednjem spletnem naslovu: http://www.tpmseuroshop.com/documents/declaration_conformities
Sweedish	SV	Härmed försäkrar Schrader Electronics Ltd. att denna typ av radioutrustning SHR3 överensstämmer med direktiv 2014/53/EU. Den fullständiga texten till EU-försäkran om överensstämmelse finns på följande webbadress: http://www.tpmseuroshop.com/documents/declaration_conformities

D00697

– CONTINUED –

■ Subaru Rear Vehicle Detection (SRVD)

	ADC Automotive Distance Control Systems GmbH Peter-Dornier-Strasse 10, 88131 Lindau, Germany

ОПРОСТЕНА ЕС ДЕКЛАРАЦИЯ ЗА СЪОТВЕТСТВИЕ	С настоящото ADC Automotive Distance Control Systems GmbH декларира, че този тип радиосъоръжение SRR 3-A е в съответствие с Директива 2014/53/ЕС. Цялостният текст на ЕС декларацията за съответствие може да се намери на следния интернет адрес: http://continental.automotive-approvals.com/
	радиочестотната лента или ленти, в която или които работи радиосъоръжението: 24.05–24.25 GHz
	максималната радиочестотна мощност, излъчвана в радиочестотната лента или ленти, в която или които работи радиосъоръжението.: 100mW (20 dBm) Peak EIRP

DECLARACIÓN UE DE CONFORMIDAD SIMPLIFICADA	Por la presente, ADC Automotive Distance Control Systems GmbH declara que el tipo de equipo radioeléctrico SRR 3-A es conforme con la Directiva 2014/53/UE. El texto completo de la declaración UE de conformidad está disponible en la dirección Internet siguiente:
	http://continental.automotive-approvals.com/
	Banda o bandas de frecuencia en las que opera el equipo radioeléctrico: 24.05–24.25 GHz
	Potencia máxima de radiofrecuencia transmitida en la banda o bandas de frecuencia en las que opera el equipo radioeléctrico: 100mW (20 dBm) Peak EIRP

ZJEDNODUŠENÉ EU PROHLÁŠENÍ O SHODĚ	Tímto ADC Automotive Distance Control Systems GmbH prohlašuje, že typ rádiového zařízení SRR 3-A je v souladu se směrnicí 2014/53/EU. Úplné znění EU prohlášení o shodě je k dispozici na této internetové adrese: http://continental.automotive-approvals.com/
	Kmitočtové pásmo (kmitočtová pásma), v němž (v nichž) rádiové zařízení pracuje: 24.05–24.25 GHz
	Maximální radiofrekvenční výkon vysílaný v kmitočtovém pásmu (v kmitočtových pásmech), v němž (v nichž) je rádiové zařízení provozováno: 100mW (20 dBm) Peak EIRP

FORENKLET EU-OVERENSSTEMMELSESERKLÆRING	Hermed erklærer ADC Automotive Distance Control Systems GmbH, at radioudstyrstypen SRR 3-A er i overensstemmelse med direktiv 2014/53/EU. EU-overensstemmelseserklæringens fulde tekst kan findes på følgende internetadresse: http://continental.automotive-approvals.com/
	Frekvensbånd, som radioudstyret fungerer på: 24.05–24.25 GHz
	Maksimal radiofrekvenseffekt, der udsendes i de frekvensbånd, som radioudstyret fungerer på: 100mW (20 dBm) Peak EIRP

VEREINFACHTE EU-KONFORMITÄTSERKLÄRUNG	Hiermit erklärt ADC Automotive Distance Control Systems GmbH, dass der Funkanlagentyp SRR 3-A der Richtlinie 2014/53/EU entspricht. Der vollständige Text der EU-Konformitätserklärung ist unter der folgenden Internetadresse verfügbar: http://continental.automotive-approvals.com/
	Das Frequenzband oder die Frequenzbänder, in dem bzw. denen die Funkanlage betrieben wird: 24.05–24.25 GHz
	Die in dem Frequenzband oder den Frequenzbändern, in dem bzw. denen die Funkanlage betrieben wird, abgestrahlte maximale Sendeleistung: 100mW (20 dBm) Peak EIRP

D00689

LIHTSUSTATUD ELI VASTAVUSDEKLA RATSIOON	Käesolevaga deklareerib ADC Automotive Distance Control Systems GmbH, et käesolev raadioseadme tüüp SRR 3-A vastab direktiivi 2014/53/EL nõuetele. ELi vastavusdeklaratsiooni täielik tekst on kättesaadav järgmisel internetiaadressil: http://continental.automotive-approvals.com/
	Sagedusriba(d), millel raadioseade töötab: 24.05–24.25 GHz
	Raadioseadme töösagedus(t)el edastatav maksimaalne saatevõimsus: 100mW (20 dBm) Peak EIRP

ΑΠΛΟΥΣΤΕΥΜΕΝΗ ΔΗΛΩΣΗ ΣΥΜΜΟΡΦΩΣΗΣ ΕΕ	Με την παρούσα ο/η ADC Automotive Distance Control Systems GmbH, δηλώνει ότι ο ραδιοεξοπλισμός SRR 3-A πληροί την οδηγία 2014/53/ΕΕ. Το πλήρες κείμενο της δήλωσης συμμόρφωσης ΕΕ διατίθεται στην ακόλουθη ιστοσελίδα στο διαδίκτυο: http://continental.automotive-approvals.com/
	Οι ζώνες συχνοτήτων στις οποίες λειτουργεί ο ραδιοεξοπλισμός:: 24.05–24.25 GHz
	η μέγιστη ραδιοηλεκτρική ισχύς στις ζώνες συχνοτήτων στις οποίες λειτουργεί ο ραδιοεξοπλισμός: 100mW (20 dBm) Peak EIRP

SIMPLIFIED EU DECLARATION OF CONFORMITY	Hereby, ADC Automotive Distance Control Systems GmbH declares that the radio equipment type SRR 3-A is in compliance with Directive 2014/53/EU. The full text of the EU declaration of conformity is available at the following internet address: http://continental.automotive-approvals.com/
	Frequency band(s) in which the radio equipment operates: 24.05–24.25 GHz
	Maximum radio-frequency power transmitted in the frequency band(s) in which the radio equipment operates:
	100mW (20 dBm) Peak EIRP

DECLARATION UE DE CONFORMITE SIMPLIFIEE	Le soussigné, ADC Automotive Distance Control Systems GmbH, déclare que l'équipement radioélectrique du type SRR 3-A est conforme à la directive 2014/53/UE. Le texte complet de la déclaration UE de conformité est disponible à l'adresse internet suivante: http://continental.automotive-approvals.com/
	Bandes de fréquences utilisées par l'équipement radioélectrique: 24.05–24.25 GHz
	Puissance de radiofréquence maximale transmise sur les bandes de fréquences utilisées par l'équipement radioélectrique: 100mW (20 dBm) Peak EIRP

POJEDNOSTAVLJENA EU IZJAVA O SUKLADNOSTI	ADC Automotive Distance Control Systems GmbH ovime izjavljuje da je radijska oprema tipa SRR 3-A u skladu s Direktivom 2014/53/EU. Cjeloviti tekst EU izjave o sukladnosti dostupan je na sljedećoj internetskoj adresi:: http://continental.automotive-approvals.com/
	Frekvencijski pojas (frekvencijski pojasi) u kojem (kojima) radijska oprema radi: 24.05–24.25 GHz
	Najveća radiofrekvencijska snaga koja se prenosi u frekvencijskom pojasu (frekvencijskim pojasima) u kojem (kojima) radijska oprema radi: 100mW (20 dBm) Peak EIRP

DICHIARAZIONE DI CONFORMITÀ UE SEMPLIFICATA	Il fabbricante, ADC Automotive Distance Control Systems GmbH, dichiara che il tipo di apparecchiatura radio SRR 3-A è conforme alla direttiva 2014/53/UE. Il testo completo della dichiarazione di conformità UE è disponibile al seguente indirizzo Internet: http://continental.automotive-approvals.com/
	Bande di frequenza di funzionamento dell'apparecchiatura radio: 24.05–24.25 GHz
	Massima potenza a radiofrequenza trasmessa nelle bande di frequenza in cui opera l'apparecchiatura radio: 100mW (20 dBm) Peak EIRP

D00690

– CONTINUED –

VIENKĀRŠOTA ES ATBILSTĪBAS DEKLARĀCIJA	Ar šo ADC Automotive Distance Control Systems GmbH deklarē, ka radioiekārta SRR 3-A atbilst Direktīvai 2014/53/ES. Pilns ES atbilstības deklarācijas teksts ir pieejams šādā interneta vietnē: http://continental.automotive-approvals.com/
	Frekvenču joslu(-as), kurā(-ās) radioiekārtas darbojas: 24.05–24.25 GHz
	Frekvenču joslā(-ās), kurā(-ās) darbojas radioiekārtas, maksimālo pārraidītā signāla jaudu.: 100mW (20 dBm) Peak EIRP

SUPAPRASTINTA ES ATITIKTIES DEKLARACIJA	Aš, ADC Automotive Distance Control Systems GmbH, patvirtinu, kad radijo įrenginių tipas SRR 3-A atitinka Direktyvą 2014/53/ES. Visas ES atitikties deklaracijos tekstas prieinamas šiuo interneto adresu: http://continental.automotive-approvals.com/
	Dažnių juosta (-os), kurioje (-iose) veikia radijo įrenginiai: 24.05–24.25 GHz
	Didžiausia radijo dažnių galia, perduodama toje (tose) dažnių juostoje (-ose), kurioje (-iose) veikia radijo įrenginiai: 100mW (20 dBm) Peak EIRP

EGYSZERŰSÍTETT EU-MEGFELELŐSÉGI NYILATKOZAT	ADC Automotive Distance Control Systems GmbH igazolja, hogy a SRR 3-A típusú rádióberendezés megfelel a 2014/53/EU irányelvnek. Az EU-megfelelőségi nyilatkozat teljes szövege elérhető a következő internetes címen.: http://continental.automotive-approvals.com/
	Az(ok) a frekvenciasáv(ok), amely(ek)en a rádióberendezés működik: 24.05–24.25 GHz
	Az abban a frekvenciasávban vagy azokban a frekvenciasávokban továbbított maximális jelerősség, amely(ek)ben a rádióberendezés üzemel: 100mW (20 dBm) Peak EIRP

DIKJARAZZJONI SSIMPLIFIKATA TA' KONFORMITÀ TAL-UE	B'dan, ADC Automotive Distance Control Systems GmbH, niddikjara li dan it-tip ta' tagħmir tar-radju SRR 3-A huwa konformi mad-Direttiva 2014/53/UE. It-test kollu tad-dikjarazzjoni ta' konformità tal-UE huwa disponibbli f'dan l-indirizz tal-Internet li ġej: http://continental.automotive-approvals.com/
	Il-medda/meded tal-frekwenza li jaħdem fihom it-tagħmir tar-radju: 24.05–24.25 GHz
	Il-potenza massima tal-frekwenza tar-radju trażmessa fil-medda/meded tal-frekwenza li jaħdem fihom it-tagħmir tar- radju: 100mW (20 dBm) Peak EIRP

VEREENVOUDIGDE EU-CONFORMITEITSVERKLARING	Hierbij verklaar ik, ADC Automotive Distance Control Systems GmbH, dat het type radioapparatuur SRR 3-A conform is met Richtlijn 2014/53/EU. De volledige tekst van de EU-conformiteitsverklaring kan worden geraadpleegd op het volgende internetadres: http://continental.automotive-approvals.com/
	Frequentieband(en) waarin de radioapparatuur functioneert: 24.05–24.25 GHz
	Maximaal radiofrequent vermogen uitgezonden in de frequentieband(en) waarin de radioapparatuur functioneert: 100mW (20 dBm) Peak EIRP

UPROSZCZONA DEKLARACJA ZGODNOŚCI UE	ADC Automotive Distance Control Systems GmbH niniejszym oświadcza, że typ urządzenia radiowego SRR 3-A jest zgodny z dyrektywą 2014/53/UE. Pełny tekst deklaracji zgodności UE jest dostępny pod następującym adresem internetowym: http://continental.automotive-approvals.com/
	Zakresu(-ów) częstotliwości, w którym (których) pracuje urządzenie radiowe: 24.05–24.25 GHz
	Maksymalnej mocy częstotliwości radiowej emitowanej w zakresie(-ach) częstotliwości, w którym (których) pracuje urządzenie radiowe: 100mW (20 dBm) Peak EIRP

D00691

DECLARAÇÃO UE DE CONFORMIDADE SIMPLIFICADA	O(a) abaixo assinado(a) ADC Automotive Distance Control Systems GmbH declara que o presente tipo de equipamento de rádio SRR 3-A está em conformidade com a Diretiva 2014/53/UE. O texto integral da declaração de conformidade está disponível no seguinte endereço de Internet: http://continental.automotive-approvals.com/
	A(s) banda(s) de frequências em que o equipamento de rádio funciona: 24.05–24.25 GHz
	A potência máxima de radiofrequências transmitida na(s) banda(s) de frequências em que o equipamento de rádio funciona: 100mW (20 dBm) Peak EIRP

DECLARAȚIA UE DE CONFORMITATE SIMPLIFICATĂ	Prin prezenta, ADC Automotive Distance Control Systems GmbH declară că tipul de echipamente radio SRR 3-A este în conformitate cu Directiva 2014/53/UE. Textul integral al declarației UE de conformitate este disponibil la următoarea adresă internet: http://continental.automotive-approvals.com/
	Banda (benzile) de frecvențe în care funcționează echipamentul radio: 24.05–24.25 GHz
	Puterea maximă de radiofrecvență transmisă în banda (benzile) de frecvențe în care funcționează echipamentul radio: 100mW (20 dBm) Peak EIRP

ZJEDNODUŠENÉ EÚ VYHLÁSENIE O ZHODE	ADC Automotive Distance Control Systems GmbH týmto vyhlasuje, že rádiové zariadenie typu SRR 3-A je v súlade so smernicou 2014/53/EÚ. Úplné EÚ vyhlásenie o zhode je k dispozícii na tejto internetovej adrese: http://continental.automotive-approvals.com/
	Frekvenčné pásmo resp. pásma, v ktorých rádiové zariadenie pracuje: 24.05–24.25 GHz
	Maximálny vysokofrekvenčný výkon prenášaný vo frekvenčnom pásme, resp. pásmach, v ktorých rádiové zariadenie pracuje: 100mW (20 dBm) Peak EIRP

POENOSTAVLJENA IZJAVA EU O SKLADNOSTI	ADC Automotive Distance Control Systems GmbH potrjuje, da je tip radijske opreme SRR 3-A skladen z Direktivo 2014/53/EU. Celotno besedilo izjave EU o skladnosti je na voljo na naslednjem spletnem naslovu: http://continental.automotive-approvals.com/
	Frekvenčni pas ali pasovi, na katerih deluje radijska oprema: 24.05–24.25 GHz
	Največja energija za radijsko frekvenco, preneseno po frekvenčnem pasu ali pasovih, na katerih radijska oprema deluje: 100mW (20 dBm) Peak EIRP

YKSINKERTAISTETTU EU-VAATIMUSTENMUKAISUUSVAKUUTUS	ADC Automotive Distance Control Systems GmbH vakuuttaa, että radiolaitetyyppi SRR 3-A on direktiivin 2014/53/EU mukainen. EU-vaatimustenmukaisuusvakuutuksen täysimittainen teksti on saatavilla seuraavassa internetosoitteessa: http://continental.automotive-approvals.com/
	Radiotaajuudet, joilla radiolaite toimii: 24.05–24.25 GHz
	Suurin mahdollinen lähetysteho radiotaajuuksilla, joilla radiolaite toimii: 100mW (20 dBm) Peak EIRP

FÖRENKLAD EU-FÖRSÄKRAN OM ÖVERENSSTÄMMELSE	Härmed försäkrar ADC Automotive Distance Control Systems GmbH att denna typ av radioutrustning SRR 3-A överensstämmer med direktiv 2014/53/EU. Den fullständiga texten till EU-försäkran om överensstämmelse finns på följande webbadress: http://continental.automotive-approvals.com/
	Det eller de frekvensband där radioutrustningen arbetar: 24.05–24.25 GHz
	Den maximala radiofrekvenseffekt som överförs inom det eller de frekvensband där radioutrustningen arbetar: 100mW (20 dBm) Peak EIRP

D00692

– CONTINUED –

EINFÖLDUÐ ESB SAMRÆMISYFIRLÝSING	Hér með lýsir ADC Automotive Distance Control Systems GmbH því yfir, að fjarskiptabúnaðurinn að gerð SRR 3-A er í samræmi við tilskipun 2014/53/ ESB. Textinn í fullri lengd um Samræmisyfirlýsingu ESB er aðgengilegur á eftirfarandi veffangi: http://continental.automotive-approvals.com/
	Bandbreidd(ir), sem fjarskiptabúnaðurinn starfar í: 24.05–24.25 GHz
	Hámarks fjarskiptatíðni sendistyrkleika í bandbreiddinni/bandbreiddunum sem fjarskiptabúnaðurinn starfar í: 100mW (20 dBm) Peak EIRP

BASİTLEŞTİRİLMİŞ AB UYGUNLUK BEYANI	Işbu belge ile, ADC Automotive Distance Control Systems GmbH şirketi SRR 3-A tipi radyo ekipmanının 2014/53/AB sayılı direktife uygun olduğunu beyan eder. AB uygunluk beyanının tam metni aşağıdaki İnternet adresinde mevcuttur: http://continental.automotive-approvals.com/
	Radyo cihazının çalıştığı frekans bandı/bantları: 24.05–24.25 GHz
	Radyo ekipmanının çalıştığı frekans bandında/bantlarında iletilen maksimum radyo frekansı gücü: 100mW (20 dBm) Peak EIRP

СПРОЩЕНА ДЕКЛАРАЦІЯ ЄС ПРО ВІДПОВІДНІСТЬ	Цим ADC Automotive Distance Control Systems GmbH заявляє, що радіообладнання типу SRR3-A відповідає вимогам Директиви 2014/53/EU. Повний текст декларації ЄС про відповідність доступний за наступною адресою в мережі Інтернет: http://continental.automotive-approvals.com/
	Частотний діапазон(-и), в якому працює радіообладнання: 24.05–24.25 ГГц
	Максимальна потужність радіочастотного сигналу, що передається у частотному діапазоні(-ах), в якому працює радіообладнання: 100 мВт (20 дБм) Пікова ефективна потужність випромінювання

D00885

■ Front Cross Traffic Information/Front Cross Traffic Braking

English	Hereby, Veoneer US, LLC declares that the radio equipment type **77V12CRN** is in compliance with Directive 2014/53/EU. The full text of the EU declaration of conformity is available at the following internet address: https://www.veoneer.com/en/regulatory Operational frequency band: 76 – 77 GHz/ Maximum output power: < 55 dBm peak eirp
Bulgarian [Български]	С настоящото Veoneer US, LLC декларира, че този тип радиосъоръжение **77V12CRN** е в съответствие с Директива 2014/53/ЕС. Цялостният текст на ЕС декларацията за съответствие може да се намери на следния интернет адрес: https://www.veoneer.com/en/regulatory Работна честотна лента: 76 – 77 GHz/ Максимална изходна мощност: < 55 dBm peak eirp
Croatian [Hrvatski]	Veoneer US, LLC ovime izjavljuje da je radijska oprema tipa **77V12CRN** u skladu s Direktivom 2014/53/EU. Cjeloviti tekst EU izjave o sukladnosti dostupan je na sljedećoj internetskoj adresi: https://www.veoneer.com/en/regulatory Radni frekvencijski pojas: 76 – 77 GHz/ Maksimalna izlazna snaga: < 55 dBm peak eirp
Czech [Český]	Tímto Veoneer US, LLC prohlašuje, že typ rádiového zařízení **77V12CRN** je v souladu se směrnicí 2014/53/EU. Úplné znění EU prohlášení o shodě je k dispozici na této internetové adrese: https://www.veoneer.com/en/regulatory Provozní kmitočtové pásmo: 76 – 77 GHz/ Nejvyšší výstupní výkon: < 55 dBm peak eirp
Danish [Dansk]	Hermed erklærer Veoneer US, LLC, at radioudstyrstypen **77V12CRN** er i overensstemmelse med direktiv 2014/53/EU. EU-overensstemmelseserklæringens fulde tekst kan findes på følgende internetadresse: https://www.veoneer.com/en/regulatory Driftsfrekvensområde: 76 – 77 GHz/ Maksimal udgangseffekt: < 55 dBm peak eirp
Dutch [Nederlands]	Hierbij verklaar ik, Veoneer US, LLC, dat het type radioapparatuur **77V12CRN** conform is met Richtlijn 2014/53/EU. De volledige tekst van de EU-conformiteitsverklaring kan worden geraadpleegd op het volgende internetadres: https://www.veoneer.com/en/regulatory Operationele frequentieband: 76 – 77 GHz/ Maximaal uitgangsvermogen: < 55 dBm peak eirp
Estonian [Eesti]	Käesolevaga deklareerib Veoneer US, LLC, et käesolev raadioseadme tüüp **77V12CRN** vastab direktiivi 2014/53/EL nõuetele. ELi vastavusdeklaratsiooni täielik tekst on kättesaadav järgmisel internetiaadressil: https://www.veoneer.com/en/regulatory Töösagedusriba: 76 – 77 GHz/ Maksimaalne väljundvõimsus: < 55 dBm peak eirp
Finnish [Suomi]	Veoneer US, LLC vakuuttaa, että radiolaitetyyppi **77V12CRN** on direktiivin 2014/53/EU mukainen. EU-vaatimustenmukaisuusvakuutuksen täysimittainen teksti on saatavilla seuraavassa internetosoitteessa: https://www.veoneer.com/en/regulatory Käyttötaajuusalue: 76 – 77 GHz/ Enimmäislähtöteho: < 55 dBm peak eirp
French [Français]	Le soussigné, Veoneer US, LLC, déclare que l'équipement radioélectrique du type **77V12CRN** est conforme à la directive 2014/53/UE. Le texte complet de la déclaration UE de conformité est disponible à l'adresse internet suivante: https://www.veoneer.com/en/regulatory Bande de fréquences opérationnelle: 76 – 77 GHz/ Puissance de sortie max: < 55 dBm peak eirp

D01227

– CONTINUED –

German [Deutsch]	Hiermit erklärt Veoneer US, LLC, dass der Funkanlagentyp **77V12CRN** der Richtlinie 2014/53/EU entspricht. Der vollständige Text der EU-Konformitätserklärung ist unter der folgenden Internetadresse verfügbar: https://www.veoneer.com/en/regulatory Betriebsfrequenzband: 76 – 77 GHz/ Maximale Ausgangsleistung: < 55 dBm peak eirp
Greek [Ελληνικά]	Με την παρούσα ο/η Veoneer US, LLC, δηλώνει ότι ο ραδιοεξοπλισμός **77V12CRN** πληροί την οδηγία 2014/53/ΕΕ. Το πλήρες κείμενο της δήλωσης συμμόρφωσης ΕΕ διατίθεται στην ακόλουθη ιστοσελίδα στο διαδίκτυο: https://www.veoneer.com/en/regulatory Ζώνη συχνότητας λειτουργίας: 76 – 77 GHz/ Μέγιστη Ισχύς Εξόδου: < 55 dBm peak eirp
Hungarian [Magyar]	Veoneer US, LLC igazolja, hogy a **77V12CRN** típusú rádióberendezés megfelel a 2014/53/EU irányelvnek. Az EU-megfelelőségi nyilatkozat teljes szövege elérhető a következő internetes címen: https://www.veoneer.com/en/regulatory Működési frekvenciasáv: 76 – 77 GHz/ Maximum kimeneti teljesítmény: < 55 dBm peak eirp
Icelandic [Íslenska]	Í þessu sambandi lýsir Veoneer US, LLC að búnaður útvarpsbúnaðarins **77V12CRN** sé í samræmi við tilskipun 2014/53/ESB. Fullkominn texti EU yfirlýsing um samræmi er að finna á eftirfarandi netfangi: https://www.veoneer.com/en/regulatory Rekstrar tíðnisvið: 76 – 77 GHz/ Hámarks útgangsstyrkur: < 55 dBm peak eirp
Italian [Italiano]	Il fabbricante, Veoneer US, LLC, dichiara che il tipo di apparecchiatura radio **77V12CRN** è conforme alla direttiva 2014/53/UE. Il testo completo della dichiarazione di conformità UE è disponibile al seguente indirizzo Internet: https://www.veoneer.com/en/regulatory Banda di frequenza operativa: 76 – 77 GHz/ Massima potenza di uscita: < 55 dBm peak eirp
Latvian [Latviešu]	Ar šo Veoneer US, LLC deklarē, ka radioiekārta **77V12CRN** atbilst Direktīvai 2014/53/ES. Pilns ES atbilstības deklarācijas teksts ir pieejams šādā interneta vietnē: https://www.veoneer.com/en/regulatory Darba frekvenču josla: 76 – 77 GHz/ Maksimālā izejas jauda: < 55 dBm peak eirp
Lithuanian [Lietuvių]	Aš, Veoneer US, LLC, patvirtinu, kad radijo įrenginių tipas **77V12CRN** atitinka Direktyvą 2014/53/ES. Visas ES atitikties deklaracijos tekstas prieinamas šiuo interneto adresu:https://www.veoneer.com/en/regulatory Darbinių dažnių diapazonas: 76 – 77 GHz/ Maksimali išėjimo galia: < 55 dBm peak eirp
Maltese [Malti]	B'dan, Veoneer US, LLC, niddikjara li dan it-tip ta' tagħmir tar-radju **77V12CRN** huwa konformi mad-Direttiva 2014/53/UE. It-test kollu tad-dikjarazzjoni ta' konformità tal-UE huwa disponibbli f'dan l-indirizz tal-Internet li ġej: https://www.veoneer.com/en/regulatory Il-banda tal-frekwenzi operattivi: 76 – 77 GHz/ L-Enerġija Massima Maħruġa: < 55 dBm peak eirp
Norwegian [Norsk]	Hermed erklærer Veoneer US, LLC at radioutstyrtypen **77V12CRN** er i samsvar med direktiv 2014/53/EU. Den fulle teksten til EU-samsvarserklæringen er tilgjengelig på følgende internettadresse: https://www.veoneer.com/en/regulatory Operasjonelt frekvensbånd: 76 – 77 GHz/ Maksimal utgangseffekt: < 55 dBm peak eirp

D01228

Polish [Polski]	Veoneer US, LLC niniejszym oświadcza, że typ urządzenia radiowego **77V12CRN** jest zgodny z dyrektywą 2014/53/UE. Pełny tekst deklaracji zgodności UE jest dostępny pod następującym adresem internetowym:https://www.veoneer.com/en/regulatory Pasmo częstotliwości roboczej: 76 – 77 GHz/ Maksymalna moc wyjściowa: < 55 dBm peak eirp
Portuguese [Português]	O(a) abaixo assinado(a) Veoneer US, LLC declara que o presente tipo de equipamento de rádio **77V12CRN** está em conformidade com a Diretiva 2014/53/UE. O texto integral da declaração de conformidade está disponível no seguinte endereço de Internet: https://www.veoneer.com/en/regulatory Faixa de frequência de funcionamento:76 - 77 GHz/ Potência de Saída Máxima:< 55 dBm peak eirp
Romanian [Română]	Prin prezenta, Veoneer US, LLC declară că tipul de echipamente radio **77V12CRN** este în conformitate cu Directiva 2014/53/UE. Textul integral al declarației UE de conformitate este disponibil la următoarea adresă internet: https://www.veoneer.com/en/regulatory Bandă frecvență operațională: 76 – 77 GHz/ Putere maximă la ieșire: < 55 dBm peak eirp
Slovenian [Slovenščina]	Veoneer US, LLC potrjuje, da je tip radijske opreme **77V12CRN** skladen z Direktivo 2014/53/EU. Celotno besedilo izjave EU o skladnosti je na voljo na naslednjem spletnem naslovu: https://www.veoneer.com/en/regulatory Operativni frekvenčni pas: 76 – 77 GHz/ Največja izhodna moč: < 55 dBm peak eirp
Slovak [Slovenský]	Veoneer US, LLC týmto vyhlasuje, že rádiové zariadenie typu **77V12CRN** je v súlade so smernicou 2014/53/EÚ. Úplné EÚ vyhlásenie o zhode je k dispozícii na tejto internetovej adrese: https://www.veoneer.com/en/regulatory Prevádzkové frekvenčné pásmo: 76 – 77 GHz/ Maximálny výstupný výkon: < 55 dBm peak eirp
Spanish [Español]	Por la presente, Veoneer US, LLC declara que el tipo de equipo radioeléctrico **77V12CRN** es conforme con la Directiva 2014/53/UE. El texto completo de la declaración UE de conformidad está disponible en la dirección Internet siguiente:https://www.veoneer.com/en/regulatory Banda de frecuencias de funcionamiento: 76 – 77 GHz/ Potencia máxima de salida: < 55 dBm peak eirp
Swedish [Svenska]	Härmed försäkrar Veoneer US, LLC att denna typ av radioutrustning **77V12CRN** överensstämmer med direktiv 2014/53/EU. Den fullständiga texten till EU-försäkran om överensstämmelse finns på följande webbadress: https://www.veoneer.com/en/regulatory Driftfrekvensband: 76 – 77 GHz/ Maximal uteffekt: < 55 dBm peak eirp
Turkish [Türk]	Buna göre, Veoneer US, LLC **77V12CRN** tipi radyo ekipmanının 2014/53/AB sayılı Direktife uygun olduğunu beyan eder. EU uyumu beyanının tam metni aşağıdaki internet adresinden edinilebilir: https://www.veoneer.com/en/regulatory Çalışma frekansı bandı: 76 – 77 GHz/ Maksimum Çıkış Gücü: < 55 dBm peak eirp

D01229

– CONTINUED –

■ LF Antenna

Model: SU19S-1
Operation frequency: 134.2 kHz
Maximum output power (ERP): 6.195 mW
Manufacturer: SUBARU CORPORATION
Address: 1-1, Subaru-cho, Ota-shi, Gunma-ken, 373-8555, Japan

Hereby, SUBARU CORPORATION declares that the radio equipment type is in compliance with Directive 2014/53/EU.
The full text of the EU declaration of conformity is available at the following internet address:
https://www.denso.com/global/en/contact-us/doc/

SUBARU CORPORATION vakuuttaa, että radiolaitetyyppi on direktiivin 2014/53/EU mukainen.
EU-vaatimustenmukaisuusvakuutuksen täysimittainen teksti on saatavilla seuraavassa internetosoitteessa:
https://www.denso.com/global/en/contact-us/doc/

Hierbij verklaar ik, SUBARU CORPORATION, dat het type radioapparatuur conform is met Richtlijn 2014/53/EU.
De volledige tekst van de EU-conformiteitsverklaring kan worden geraadpleegd op het volgende internetadres:
https://www.denso.com/global/en/contact-us/doc/

Le soussigné, SUBARU CORPORATION, déclare que l'équipement radioélectrique du type est conforme à la directive 2014/53/UE.
Le texte complet de la déclaration UE de conformité est disponible à l'adresse internet suivante:
https://www.denso.com/global/en/contact-us/doc/

Härmed försäkrar SUBARU CORPORATION att denna typ av radioutrustning överensstämmer med direktiv 2014/53/EU.
Den fullständiga texten till EU-försäkran om överensstämmelse finns på följande webbadress:
https://www.denso.com/global/en/contact-us/doc/

D01074

Hermed erklærer SUBARU CORPORATION, at radioudstyrstypen er i overensstemmelse med direktiv 2014/53/EU.
EU-overensstemmelseserklæringens fulde tekst kan findes på følgende internetadresse:
https://www.denso.com/global/en/contact-us/doc/

Hiermit erklärt SUBARU CORPORATION, dass der Funkanlagentyp der Richtlinie 2014/53/EU entspricht.
Der vollständige Text der EU-Konformitätserklärung ist unter der folgenden Internetadresse verfügbar:
https://www.denso.com/global/en/contact-us/doc/

Με την παρούσα ο/η SUBARU CORPORATION, δηλώνει ότι ο ραδιοεξοπλισμός πληροί την οδηγία 2014/53/ΕΕ.
Το πλήρες κείμενο της δήλωσης συμμόρφωσης ΕΕ διατίθεται στην ακόλουθη ιστοσελίδα στο διαδίκτυο:
https://www.denso.com/global/en/contact-us/doc/

Il fabbricante, SUBARU CORPORATION, dichiara che il tipo di apparecchiatura radio è conforme alla direttiva 2014/53/UE.
Il testo completo della dichiarazione di conformità UE è disponibile al seguente indirizzo Internet:
https://www.denso.com/global/en/contact-us/doc/

Por la presente, SUBARU CORPORATION declara que el tipo de equipo radioeléctrico es conforme con la Directiva 2014/53/UE.
El texto completo de la declaración UE de conformidad está disponible en la dirección Internet siguiente:
https://www.denso.com/global/en/contact-us/doc/

D01075

O(a) abaixo assinado(a) SUBARU CORPORATION declara que o presente tipo de equipamento de rádio está em conformidade com a Diretiva 2014/53/UE.
O texto integral da declaração de conformidade está disponível no seguinte endereço de Internet:
https://www.denso.com/global/en/contact-us/doc/

B'dan, SUBARU CORPORATION, niddikjara li dan it-tip ta' tagħmir tar-radju huwa konformi mad-Direttiva 2014/53/UE.
It-test kollu tad-dikjarazzjoni ta' konformità tal-UE huwa disponibbli f'dan l-indirizz tal-Internet li ġej:
https://www.denso.com/global/en/contact-us/doc/

Käesolevaga deklareerib SUBARU CORPORATION, et käesolev raadioseadme tüüp vastab direktiivi 2014/53/EL nõuetele.
ELi vastavusdeklaratsiooni täielik tekst on kättesaadav järgmisel internetiaadressil:
https://www.denso.com/global/en/contact-us/doc/

SUBARU CORPORATION igazolja, hogy a típusú rádióberendezés megfelel a 2014/53/EU irányelvnek.
Az EU-megfelelőségi nyilatkozat teljes szövege elérhető a következő internetes címen:
https://www.denso.com/global/en/contact-us/doc/

SUBARU CORPORATION týmto vyhlasuje, že rádiové zariadenie typu je v súlade so smernicou 2014/53/EÚ.
Úplné EÚ vyhlásenie o zhode je k dispozícii na tejto internetovej adrese:
https://www.denso.com/global/en/contact-us/doc/

D01076

Tímto SUBARU CORPORATION prohlašuje, že typ rádiového zařízení je v souladu se směrnicí 2014/53/EU.
Úplné znění EU prohlášení o shodě je k dispozici na této internetové adrese:
https://www.denso.com/global/en/contact-us/doc/

SUBARU CORPORATION potrjuje, da je tip radijske opreme skladen z Direktivo 2014/53/EU.
Celotno besedilo izjave EU o skladnosti je na voljo na naslednjem spletnem naslovu:
https://www.denso.com/global/en/contact-us/doc/

Aš, SUBARU CORPORATION, patvirtinu, kad radijo įrenginių tipas atitinka Direktyvą 2014/53/ES.
Visas ES atitikties deklaracijos tekstas prieinamas šiuo interneto adresu:
https://www.denso.com/global/en/contact-us/doc/

Ar šo SUBARU CORPORATION deklarē, ka radioiekārta atbilst Direktīvai 2014/53/ES.
Pilns ES atbilstības deklarācijas teksts ir pieejams šādā interneta vietnē:
https://www.denso.com/global/en/contact-us/doc/

SUBARU CORPORATION niniejszym oświadcza, że typ urządzenia radiowego jest zgodny z dyrektywą 2014/53/UE.
Pełny tekst deklaracji zgodności UE jest dostępny pod następującym adresem internetowym:
https://www.denso.com/global/en/contact-us/doc/

D01077

Hér með lýsir SUBARU CORPORATION yfir því að er í samræmi við grunnkröfur og aðrar kröfur, sem gerðar eru í tilskipun 2014/53/EU.
Samræmisyfirlýsing er einnig aðgengileg á eftirfarandi vefslóð:
https://www.denso.com/global/en/contact-us/doc/

SUBARU CORPORATION erklærer at er i overensstemmelse med direktiv 2014/53/EU.
Samsvarserklæringen i fulltekst er tilgjengelig på følgende internettadresse:
https://www.denso.com/global/en/contact-us/doc/

С настоящото SUBARU CORPORATION декларира, че този тип радиосъоръжение е в съответствие с Директива 2014/53/ЕС.
Цялостният текст на ЕС декларацията за съответствие може да се намери на следния интернет адрес:
https://www.denso.com/global/en/contact-us/doc/

Prin prezenta, SUBARU CORPORATION declară că tipul de echipamente radio este în conformitate cu Directiva 2014/53/UE.
Textul integral al declarației UE de conformitate este disponibil la următoarea adresă internet:
https://www.denso.com/global/en/contact-us/doc/

SUBARU CORPORATION ovime izjavljuje da je radijska oprema tipa u skladu s Direktivom 2014/53/EU.
Cjeloviti tekst EU izjave o sukladnosti dostupan je na sljedećoj internetskoj adresi:
https://www.denso.com/global/en/contact-us/doc/

D01078

– CONTINUED –

Овиме, SUBARU CORPORATION изјављује да је радио опрема тип усаглашена са Директивом 2014/53/EU.
Цео текст ЕУ декларације о усаглашености доступам је на следећој интернет адреси:
https://www.denso.com/global/en/contact-us/doc/

Amb aquest document, SUBARU CORPORATION declara que el tipus d'equipament radioelèctric es conforme a la Directiva 2014/53/UE.
El text complet de la declaració UE de conformitat està disponible en la següent adreça d'Internet:
https://www.denso.com/global/en/contact-us/doc/

İşbu belge; SUBARU CORPORATION telsiz ekipmanı tipinin 2014/53/AB sayılı Direktif'e uygun olduğunu beyan eder.
AB uygunluk beyanının tam metni aşağıdaki internet adresinde mevcuttur:
https://www.denso.com/global/en/contact-us/doc/

Me anë të kësaj deklaratë, subjekti SUBARU CORPORATION deklaron se pajisjet radio është në përputhje me këtë rregull teknik për pajisjet radio dhe fundore të komunikimeve elektronike.
Teksti i plotë i Deklaratës së Konformitetit është i disponueshëm në adresën e mëposhtme të internetit:
https://www.denso.com/global/en/contact-us/doc

D01079

передавач: модель: SU19S-1
смугу радіочастот: 134.2 кГц
максимальну потужність
випромінювання (ERP): 6.195мВт
виробник: SUBARU CORPORATION
адреса: 1-1, Subaru-cho, Ota-shi, Gunma-ken, 373-8555, Japan

справжнім SUBARU CORPORATION заявляє, що тип радіообладнання відповідає Технічному регламенту радіообладнання;
повний текст декларації про відповідність доступний на веб-сайті за такою адресою:
https://www.denso.com/global/en/contact-us/doc/

D01307

■ Wireless Charger

Manufacturer

- Name: Panasonic Automotive Systems Co., Ltd.
- Address: 4261, Ikonobe-cho, Tsuzuki-ku, Yokohama-shi, Kanagawa-ken 224-8520, Japan

Specifications of Wireless charger

Frequency band: 119.3-128.6kHz Maximum radio-frequency power: 10W Max

Model No. [AF2201]

CE

Hereby, Panasonic Automotive Systems Co., Ltd. declares that the radio equipment type [AF2201] is in compliance with Directive 2014/53/EU.
The full text of the EU declaration of conformity is available at the following internet address:
https://www.ptc.panasonic.eu/

С настоящото Panasonic Automotive Systems Co., Ltd. декларира, че този тип радиосъоръжение [AF2201] е в съответствие с Директива 2014/53/ЕС.
Цялостният текст на ЕС декларацията за съответствие може да се намери на следния интернет адрес:
https://www.ptc.panasonic.eu/

Tímto Panasonic Automotive Systems Co., Ltd. prohlašuje, že typ rádiového zařízení [AF2201] je v souladu se směrnicí 2014/53/EU.
Úplné znění EU prohlášení o shodě je k dispozici na této internetové adrese:
https://www.ptc.panasonic.eu/

Hermed erklærer Panasonic Automotive Systems Co., Ltd. , at radioudstyrstypen [AF2201] er i overensstemmelse med direktiv 2014/53/EU.
EU-overensstemmelseserklæringens fulde tekst kan findes på følgende internetadresse:
https://www.ptc.panasonic.eu/

D01267

Hiermit erklärt Panasonic Automotive Systems Co., Ltd. , dass der Funkanlagentyp [AF2201] der Richtlinie 2014/53/EU entspricht. Der vollständige Text der EU-Konformitätserklärung ist unter der folgenden Internetadresse verfügbar:
https://www.ptc.panasonic.eu/

Käesolevaga deklareerib Panasonic Automotive Systems Co., Ltd. , et käesolev raadioseadme tüüp [AF2201] vastab direktiivi 2014/53/EL nõuetele. ELi vastavusdeklaratsiooni täielik tekst on kättesaadav järgmisel internetiaadressil:
https://www.ptc.panasonic.eu/

Με την παρούσα ο/η Panasonic Automotive Systems Co., Ltd. , δηλώνει ότι ο ραδιοεξοπλισμός [AF2201] πληροί την οδηγία 2014/53/ΕΕ. Το πλήρες κείμενο της δήλωσης συμμόρφωσης ΕΕ διατίθεται στην ακόλουθη ιστοσελίδα στο διαδίκτυο:
https://www.ptc.panasonic.eu/

Por la presente, Panasonic Automotive Systems Co., Ltd. declara que el tipo de equipo radioeléctrico [AF2201] es conforme con la Directiva 2014/53/UE.
El texto completo de la declaración UE de conformidad está disponible en la dirección Internet siguiente:
https://www.ptc.panasonic.eu/

Le soussigné, Panasonic Automotive Systems Co., Ltd. déclare que l'équipement radioélectrique du type [AF2201] est conforme à la directive 2014/53/UE.
Le texte complet de la déclaration UE de conformité est disponible à l'adresse internet suivante:
https://www.ptc.panasonic.eu/

D01268

– CONTINUED –

Il fabbricante, Panasonic Automotive Systems Co., Ltd. ,
dichiara che il tipo di apparecchiatura radio [AF2201]
è conforme alla direttiva 2014/53/UE.
Il testo completo della dichiarazione di conformità UE è
disponibile al seguente indirizzo Internet:
https://www.ptc.panasonic.eu/

Ar šo Panasonic Automotive Systems Co., Ltd. deklarē,
ka radioiekārta [AF2201] atbilst Direktīvai 2014/53/ES.
Pilns ES atbilstības deklarācijas teksts ir pieejams šādā
interneta vietnē:
https://www.ptc.panasonic.eu/

Aš, Panasonic Automotive Systems Co., Ltd. , patvirtinu,
kad radijo įrenginių tipas [AF2201] atitinka Direktyvą 2014/53/ES.
Visas ES atitikties deklaracijos tekstas prieinamas šiuo
interneto adresu:
https://www.ptc.panasonic.eu/

Panasonic Automotive Systems Co., Ltd. ovime izjavljuje
da je radijska oprema tipa [AF2201] u skladu s Direktivom
2014/53/EU. Cjeloviti tekst EU izjave o sukladnosti dostupan je
na sljedećoj internetskoj adresi:
https://www.ptc.panasonic.eu/

Panasonic Automotive Systems Co., Ltd. igazolja,
hogy a [AF2201] típusú rádióberendezés megfelel
a 2014/53/EU irányelvnek.
Az EU-megfelelőségi nyilatkozat teljes szövege
elérhető a következő internetes címen:
https://www.ptc.panasonic.eu/

D01269

B'dan, Panasonic Automotive Systems Co., Ltd. ,
niddikjara li dan it-tip ta' tagħmir tar-radju [AF2201] huwa
konformi mad-Direttiva 2014/53/UE.
It-test kollu tad-dikjarazzjoni ta' konformità tal-UE huwa
disponibbli f'dan l-indirizz tal-Internet li ġej:
https://www.ptc.panasonic.eu/

Hierbij verklaar ik, Panasonic Automotive Systems Co., Ltd. ,
dat het type radioapparatuur [AF2201] conform is met Richtlijn
2014/53/EU.
De volledige tekst van de EU-conformiteitsverklaring kan
worden geraadpleegd op het volgende internetadres:
https://www.ptc.panasonic.eu/

Panasonic Automotive Systems Co., Ltd. niniejszym
oświadcza, że typ urządzenia radiowego [AF2201] jest zgodny
z dyrektywą 2014/53/UE.
Pełny tekst deklaracji zgodności UE jest dostępny pod
następującym adresem internetowym:
https://www.ptc.panasonic.eu/

O(a) abaixo assinado(a) Panasonic Automotive Systems Co., Ltd.
declara que o presente tipo de equipamento de rádio [AF2201]
está em conformidade com a Diretiva 2014/53/UE.
O texto integral da declaração de conformidade está disponível
no seguinte endereço de Internet:
https://www.ptc.panasonic.eu/

Prin prezenta, Panasonic Automotive Systems Co., Ltd.
declară că tipul de echipamente radio [AF2201] este în
conformitate cu Directiva 2014/53/UE.
Textul integral al declarației UE de conformitate este disponibil
la următoarea adresă internet:
https://www.ptc.panasonic.eu/

D01270

Panasonic Automotive Systems Co., Ltd. týmto vyhlasuje,
že rádiové zariadenie typu [AF2201] je v súlade so smernicou
2014/53/EÚ.
Úplné EÚ vyhlásenie o zhode je k dispozícii na tejto
internetovej adrese:
https://www.ptc.panasonic.eu/

Panasonic Automotive Systems Co., Ltd. potrjuje, da je tip
radijske opreme [AF2201] skladen z Direktivo 2014/53/EU.
Celotno besedilo izjave EU o skladnosti je na voljo na
naslednjem spletnem naslovu:
https://www.ptc.panasonic.eu/

Panasonic Automotive Systems Co., Ltd. vakuuttaa, että
radiolaitetyyppi [AF2201] on direktiivin 2014/53/EU mukainen.
EU-vaatimustenmukaisuusvakuutuksen täysimittainen teksti
on saatavilla seuraavassa internetosoitteessa:
https://www.ptc.panasonic.eu/

Härmed försäkrar Panasonic Automotive Systems Co., Ltd.
att denna typ av radioutrustning [AF2201] överensstämmer med
direktiv 2014/53/EU.
Den fullständiga texten till EU-försäkran om överensstämmelse
finns på följande webbadress:
https://www.ptc.panasonic.eu/

D01271

■ Importer Information

United Kingdom	Subaru (UK) Ltd	The Gate International Drive, Solihull, B90 4WA, United Kingdom
Ireland	I.M. Automotive Ltd	IM House, NVD Complex, Browns Barn, Baldonnell, Co. Dublin, D22 AV20
Netherlands	N.V.SUBARU BENELUX	Beechavenue 54-62,1119PW Schiphol-Rijk, the Netherlands
Belgium	N.V.SUBARU BENELUX	Leuvensesteenweg 555, Entrance 2, 1930 Zaventem, Belgium
Luxembourg	N.V.SUBARU BENELUX	Leuvensesteenweg 555, Entrance 2, 1930 Zaventem, Belgium
France	SUBARU FRANCE S.A.S.	P.A. les Bethunes, 1, avenue de Fief, BP 432 Saint-Ouen l'Aumone, 95005 Cergy-Pontoise, France
Andorra	SUBARU FRANCE S.A.S.	P.A. les Bethunes, 1, avenue de Fief, BP 432 Saint-Ouen l'Aumone, 95005 Cergy-Pontoise, France
Sweden	Subaru Nordic AB	Starrvägen 15 232 61 ARLÖV, Sweden
Denmark	Subaru Nordic AB	Starrvägen 15 232 61 ARLÖV, Sweden

D01302

– CONTINUED –

Finland	Subaru Nordic AB	Starrvägen 15 232 61 ARLÖV, Sweden
Germany	SUBARU Deutschland GmbH	Emil-Frey-Strasse 6, 61169 Friedberg, Germany
Greece	PLEIADES MOTORS SA	286, Kifissias Ave., Chalandri 15232, Greece
Italy	Subaru Italia S. p. A.	20156 MILANO - Via Montefeltro, 6/A, Italia
Canary islands	SUBARU ESPAÑA S.A.	Avenida de Bruselas No. 32, 28108 Alcobendas Madrid, Spain
Spain	SUBARU ESPAÑA S.A.	Avenida de Bruselas No. 32, 28108 Alcobendas Madrid, Spain
Malta	Liaco Limited	Lia buildings, Triq il-Mosta, Lija LJA9012, Malta
Estonia	Subaru Nordic AB	Starrvägen 15 232 61 ARLÖV, Sweden

D01251

Hungary	Emil Frey Import Kft.	Mogyoródi út 34-40, 1149, Budapest, Hungary
Slovakia	Mikona s.r.o.	Vajnorska 129, 831 04 Bratislava, Slovakia
Czech Republic	SUBARU ČR, s.r.o.	Pekarska 5, 155 00 Prague 5, Czech Republic
Slovenia	Subaru Italia S. p. A.	20156 MILANO - Via Montefeltro, 6/A, Italia
Lithuania	Subaru Nordic AB	Starrvägen 15 232 61 ARLÖV, Sweden
Latvia	Subaru Nordic AB	Starrvägen 15 232 61 ARLÖV, Sweden
Cyprus	A. Stephanides & Son Automotive Ltd.	92 Athalassas Avenue, Strovolos 2024, Nicosia, Cyprus

D01114

– CONTINUED –

Poland	Subaru Import Polska sp. z o.o.	ul. Josepha Conrada 51, 31-357 Kraków, Poland
Iceland	BL ehf.	Sævarhöfða 2 - 110 Reykjavík, Iceland
Norway	Subaru Norge AS	Masteveien 4, Skytta, Kingdom of Norway
Bulgaria	Subaru Italia S. p. A.	20156 MILANO - Via Montefeltro, 6/A, Italia
Montenegro	NC.Kattamis (Serbia Montenegro) Ltd.,	59 Ayiou Nicplaou Str, Engomi, Nicosia, Republic of Cyprus
Croatia	Subaru Italia S. p. A.	20156 MILANO - Via Montefeltro, 6/A, Italia
Austria	Subaru Österreich	Michael-Walz-Gasse 18C 5020 Salzburg
Liechtenstein	SUBARU Schweiz AG	Emil-Frey-Strasse 2, CH-5745 Safenwil, Schweiz

D01303

Serbia	NC.Kattamis (Serbia Montenegro) Ltd.,	59 Ayiou Nicplaou Str, Engomi, Nicosia, Republic of Cyprus
Turkey	Baytur Motorlu Vasıtalar Ticaret A.Ş	Boyalı Köşk sok No:4/1 34345 Bebek Istanbul, Turkiye
Switzerland	SUBARU Schweiz AG	Emil-Frey-Strasse 2, CH-5745 Safenwil, Schweiz
Tahiti	Tahiti Automobiles	192, Avenue Georges Clemenceau - 98713 PAPEETE TAHITI
New Caledonia	ALMAMETO S.A	Complexe Ménard - 21 rue Jean Chalier PK4 - BP H2 98849 Nouméa Cedex, New Caledonia
Ukraine	Sojitz auto Ukraine LLC	9F Esplanadna Street 20, Kiev 01601
Isle of Man	Subaru (UK) Ltd	The Gate International Drive Solihull B90 4WA, United Kingdom
Channel Islands	Subaru (UK) Ltd	The Gate International Drive Solihull B90 4WA, United Kingdom
Romania	Subaru Italia S. p. A.	20156 MILANO - Via Montefeltro, 6/A, Italia

D01304

13-4. Technical Information

■ Singapore Models

▼ Access key fob

Complies with
IMDA Standards
DA103352

DENSO 14AKB

D01182

▼ Push-button ignition switch

Complies with
IMDA Standards
DA103352

SUBARU SSPIMB02

D00529

▼ Subaru Rear Vehicle Detection (SRVD)

Complies with
IMDA Standards
DA103352

D00580

■ Dominican Republic Models

⚠ CAUTION

FCC WARNING

Changes or modifications not expressly approved by the party responsible for compliance could void the user's authority to operate the equipment.

NOTE

This device complies with part 15 of the FCC Rules. Operation is subject to the following two conditions: (1) This device may not cause harmful interference, and (2) this device must accept any interference received, including interference that may cause undesired operation.

▼ Access key fob

FCC ID: HYQ14AKB

▼ Keyless access with push-button start system

FCC ID: Y8PSU19S-1

▼ **Immobilizer for models with "keyless access with push-button start system"**

FCC ID: Y8PSSPIMB02

▼ **Wireless charger**

FCC ID: ACJ932AF2201

⚠ CAUTION

This equipment has been tested and found to comply with the limits for a wireless power charger, pursuant to part 18 of the FCC Rules.

This equipment generates, uses and can radiate radio frequency energy and, if not installed and used in accordance with the instructions, may cause harmful interference to radio communications.

However, there is no guarantee that interference will not occur in a particular installation.

If this equipment does cause harmful interference to radio communications, which can be determined by turning the equipment off and on, the user is encouraged to try to correct the interference by one or more of the following measures:

- **Reorient or relocate the receiving antenna.**
- **Increase the separation between the equipment and receiver.**
- **Connect the equipment into an outlet on a circuit different from that to which the receiver is connected.**

This equipment complies with FCC radiation exposure limits set forth for an uncontrolled environment and meets the FCC radio frequency (RF) Exposure Guidelines. This equipment should be installed and operated keeping the radiator at least 20 cm or more away from person's body.

NOTE

This device complies with part 15 and part 18 of the FCC Rules. Operation is subject to the following two conditions: (1) This device may not cause harmful interference, and (2) this device must accept any interference received, including interference that may cause undesired operation.

■ Guatemala Republic Models

▼ **Wireless charger**

FCC ID: ACJ932AF2201

⚠ CAUTION

FCC CAUTION

Changes or modifications not expressly approved by the party responsible for compliance could void the user's authority to operate the equipment.

This equipment has been tested and found to comply with the limits for a wireless power charger, pursuant to part 18 of the FCC Rules.

This equipment generates, uses and can radiate radio frequency energy and, if not installed and used in accordance with the instructions, may cause harmful interference to radio communications.

However, there is no guarantee that interference will not occur in a particular installation.

If this equipment does cause harmful interference to radio communications, which can be determined by turning the equipment off and on, the user is encouraged to try to correct the interference by one or

– CONTINUED –

more of the following measures:

- Reorient or relocate the receiving antenna.
- Increase the separation between the equipment and receiver.
- Connect the equipment into an outlet on a circuit different from that to which the receiver is connected.

This equipment complies with FCC radiation exposure limits set forth for an uncontrolled environment and meets the FCC radio frequency (RF) Exposure Guidelines. This equipment should be installed and operated keeping the radiator at least 20 cm or more away from person's body.

NOTE

This device complies with part 15 and part 18 of the FCC Rules. Operation is subject to the following two conditions: (1) This device may not cause harmful interference, and (2) this device must accept any interference received, including interference that may cause undesired operation.

■ Philippine Models

▼ Subaru Rear Vehicle Detection (SRVD)

NTC

Type Approved

No.:ESD-1409920C

D00730

■ Taiwan Models

▼ Tire pressure monitoring system

取得審驗證明之低功率射頻器材，非經核准，公司、商號或使用者均不得擅自變更頻率、加大功率或變更原設計之特性及功能。低功率射頻器材之使用不得影響飛航安全及干擾合法通信；經發現有干擾現象時，應立即停用，並改善至無干擾時方得繼續使用。前述合法通信，指依電信管理法規定作業之無線電通信。低功率射頻器材須忍受合法通信或工業、科學及醫療用電波輻射性電機設備之干擾。

D01216

▼ Access key fob

取得審驗證明之低功率射頻器材，非經核准，公司、商號或使用者均不得擅自變更頻率、加大功率或變更原設計之特性及功能。低功率射頻器材之使用不得影響飛航安全及干擾合法通信；經發現有干擾現象時，應立即停用，並改善至無干擾時方得繼續使用。前述合法通信，指依電信管理法規定作業之無線電通信。低功率射頻器材須忍受合法通信或工業、科學及醫療用電波輻射性電機設備之干擾。

D01185

▼ Keyless access with push-button start system

取得審驗證明之低功率射頻器材，非經核准，公司、商號或使用者均不得擅自變更頻率、加大功率或變更原設計之特性及功能。低功率射頻器材之使用不得影響飛航安全及干擾合法通信；經發現有干擾現象時，應立即停用，並改善至無干擾時方得繼續使用。前述合法通信，指依電信管理法規定作業之無線電通信。低功率射頻器材須忍受合法通信或工業、科學及醫療用電波輻射性電機設備之干擾。

D01186

▼ Immobilizer for models with “keyless access with push-button start system”

取得審驗證明之低功率射頻器材，非經核准，公司、商號或使用者均不得擅自變更頻率、加大功率或變更原設計之特性及功能。低功率射頻器材之使用不得影響飛航安全及干擾合法通信；經發現有干擾現象時，應立即停用，並改善至無干擾時方得繼續使用。前述合法通信，指依電信管理法規定作業之無線電通信。低功率射頻器材須忍受合法通信或工業、科學及醫療用電波輻射性電機設備之干擾。

D01188

– CONTINUED –

▼ Subaru Rear Vehicle Detection (SRVD)

取得審驗證明之低功率射頻器材，非經核准，公司、商號或使用者均不得擅自變更頻率、加大功率或變更原設計之特性及功能。低功率射頻器材之使用不得影響飛航安全及干擾合法通信；經發現有干擾現象時，應立即停用，並改善至無干擾時方得繼續使用。前述合法通信，指依電信管理法規定作業之無線電通信。低功率射頻器材須忍受合法通信或工業、科學及醫療用電波輻射性電機設備之干擾。

D01173

▼ AUX USB BOX

商品名稱:AUX USB BOX 型號:EF-3271, EF-3272, EF-3274, EF-3275
最高工作溫度：80℃
額定電壓:DC 12V 消耗電力:5.5A
Faurecia Clarion Electronics Co., Ltd.
台灣速霸陸股份有限公司 桃園市中壢區永福里東園路38之2號 03-435-7088
https://www.clarion.com/tw/zh/product-compliance/subaru/RoHS/EF3271/index.html

D01279

■ Argentina Models

▼ Immobilizer for models with “key-less access with push-button start system”

R! H-21746

D01254

▼ Access key

DENSO

14AKB

R! H-27002

D01187

▼ **Keyless access with push-button start system**

SUBARU
Model: SU19S−1
R! H−23533

D01308

▼ **Subaru Rear Vehicle Detection (SRVD)**

R! H-20046

D01089

▼ **Tire pressure monitoring system**

▽ **Transmitter**

CNC ID: H-16483

■ Jamaica Models

▼ **Access key fob**

This product has been Type Approved by Jamaica: SMA-14AKB.

▼ **Keyless access with push-button start system**

This product has been Type Approved by Jamaica: SMA-SU19S-1.

▼ **Immobilizer for models with “keyless access with push-button start system”**

This product has been Type Approved by Jamaica: SMA, Equipment identifier is placed on the product.

▼ **Wireless charger**

This product contains a Type Approved by Jamaica: SMA-AF2201.

– CONTINUED –

■ Paraguay Models

▼ Wireless charger

Vendor: Tokyo Motors S.A.

Address: Avenida Eusebio Ayala 4649, KM 5 1/2 Asuncion, Republic of Paraguay

▼ Access key fob

CONATEL

NR:2021-09-I-0580
DENSO 14AKB

D01190

Vendor: Tokyo Motors S.A.

Address: Avenida Eusebio Ayala 4649, KM 5 1/2 Asuncion, Republic of Paraguay

▼ Keyless access with push-button start system

Vendor: Tokyo Motors S.A.

Address: Avenida Eusebio Ayala 4649, KM 5 1/2 Asuncion, Republic of Paraguay

▼ Subaru Rear Vehicle Detection (SRVD)

CONATEL

NR: 2021-01-I-0038

D01092

Distributor in Paraguay:

Company: Tokyo Motors S.A.

Address: Avenida Eusebio Ayala 4649, KM 5 1/2 Asuncion, Republic of Paraguay

▼ Immobilizer for models with “key-less access with push-button start system”

CONATEL

NR:2020-07-I-0488
SUBARU SSPIMB02

D01083

Vendor: Tokyo Motors S.A.

Address: Avenida Eusebio Ayala 4649, KM 5 1/2 Asuncion, Republic of Paraguay

▼ **Tire pressure monitoring system**

▽ **Transmitter**

CONATEL

NR: 2021-06-I-0349

D01211

■ Australia/New Zealand Models

▼ **Subaru Rear Vehicle Detection (SRVD)**

D00804

■ Ukraine Models

▼ **Tire pressure monitoring system**

▽ **Transmitter**

справжнім (Schrader Electronics Ltd) заявляє, що тип радіообладнання (Tire Pressure Monitoring Sensor) відповідає Технічному регламенту радіообладнання;
повний текст декларації про відповідність доступний на веб-сайті за такою адресою:

Unit 11, Antrim, Antrim Technology Park,
Antrim, Co. Antrim,
BT41 1QS
http://www.tpmseuroshop.com/documents/declaration_conformities

D00930

▼ **Subaru Rear Vehicle Detection (SRVD)**

D00870

– CONTINUED –

справжнім (найменування виробника ADC Automotive Distance Control Systems GmbH) заявляє, що тип радіообладнання (позначення типу радіообладнання SRR3-A) відповідає Технічному регламенту радіообладнання;

повний текст декларації про відповідність доступний на веб-сайті за такою адресою:
http://continental.automotive-approvals.com/

D00909

SRR3-A has been registered with: UA RF: 1CONT 0006

▼ Wireless charger

Бездротовий зарядний пристрій смугу радіочастот, в якій працює радіообладнання: 119.3-128.6kHz максимальну потужність випромінювання в смузі радіочастот, в якій працює радіообладнання: 10W
моделі №.AF2201
справжнім Panasonic Automotive Systems Co.,Ltd заявляє, що тип радіообладнання AF2201 відповідає Технічному регламенту радіообладнання; повний текст декларації про відповідність доступний на веб-сайті за такою адресою: https://service.panasonic.ua/ (розділ «Технічне регулювання»)

D01231

■ Mexico Models

▼ Access key fob

Este equipo opera a título secundario, consecuentemente, debe aceptar interferencias perjudiciales incluyendo equipos de la misma clase y puede no causar interferencias a sistemas operando a título primario.

IFT RCPDE1421-4665
14AKB
DENSO

D01212

▼ Keyless access with the push-button start system

Este equipo opera a título secundario, consecuentemente, debe aceptar interferencias perjudiciales incluyendo equipos de la misma clase y puede no causar interferencias a sistemas operando a título primario.

D01209

▼ Immobilizer

Este equipo opera a título secundario, consecuentemente, debe aceptar interferencias perjudiciales incluyendo equipos de la misma clase y puede no causar interferencias a sistemas operando a título primario.

D01195

▼ Tire pressure monitoring system

▽ Transmitter

ift
IFT RLVSCSH20-2200

“La operación de este equipo está sujeta a las siguientes dos condiciones: (1) es posible que este equipo o dispositivo no cause interferencia perjudicial y (2) este equipo o dispositivo debe aceptar cualquier interferencia, incluyendo la que pueda causar su operación no deseada.”

Note:
The use of the IFT Seal will not be mandatory for products that have been approved or have begun the approval process prior to the entry into force of the Guidelines.

D01305

▽ Receiver

IFETEL RLVSUTD18-0302
SUBARU
MODEL:TD1G141
La operación de este equipo está sujeta a las siguientes dos condiciones: (1) es posible que este equipo o dispositivo no cause interferencia perjudicial y (2) este equipo o dispositivo debe aceptar cualquier interferencia, incluyendo la que pueda causar su operación no deseada.
IFETEL RLVSUTD18-0302

D01127

▼ Subaru Rear Vehicle Detection (SRVD)

Certificado de homologacion: RLVCOSR15-0442

Continental SRR3-A

Este equipo opera a titulo secundario, consecuentemente, debe aceptar interferencias perjudiciales incluyendo equipos de la misma clase y puede no causar interferencias a sistemas operando a titulo primario.

702185

There is an illustrated index in this Owner's Manual. If you have difficulty finding your target items in the index, try to use the illustrated index.

Illustrated index 13

A

Abbreviation 4
ABS (Anti-lock Brake System) 333
  Warning light 187
Access key fob 128, 449
  Warning indicator 193
Accessories 510
Accessory power outlet 297
Adaptive Driving Beam (ADB) 251
  Function 251
  Indicator 199
  Indicator light 199, 251
  Warning light 199
Air cleaner element 485
Air conditioner
  Automatic climate control 276
  Manual climate control 277
Air filtration system 283
Airflow mode selection 277
All-Wheel Drive 405
  All-Wheel Drive warning light 191
Alloy wheel 501
  Cleaning 460
Antenna
  Roof antenna 288
Armrest 64
Ashtray 310
Assist grip 303
Audio
  Antenna 288
  Set 288
Auto dimmer cancel function 179
Auto on/off headlights 244
  Sensor 245
Auto Vehicle Hold
  Function 345
  Indicator light 190
  ON/OFF icon 220
Auto-dimming mirror 264
Automatic headlight beam leveler 254
  Warning light 199
Automatic rain sensing windshield wipers 259
  Sensor 260
  Sensor sensitivity control 260
Automatic transmission
  Fluid 487, 524

B

Battery
  Drainage reduction functions 173
  High voltage 508
  Jump starting 439
  Replacement (access key fob) 141, 514
  Vehicle battery 507
Blind Spot Detection (BSD) 366
Booster cushion 90
Booster seat 90

Bottle holder 296
Brake 331
Breaking-in of new brake pads 489
Disc 525
Disc brake pad wear warning indicators 333
Fluid 488, 524
Pad 490
Parking 343
Pedal 489
Tips 331
Brake system 331
Assist 332
Warning light 188
Bulb
Chart 527
Replacement 510

C

Camera
Multi View Monitor 351
Rear view camera 361
Cargo area
Cover 307
Light 291, 510
Tie-down hooks 308
Catalytic converter 403
Center console 294
Center console tray 295
Center information display (CID) 214
Cleaning 463
Display Off 221
Center tray 294
Changing
Coolant 483
Engine oil and oil filter 480
Washer fluid 501
Charge warning light 184
Checking
Coolant level 482
Coolant level (Inverter with converter assembly) 484
Fluid level (brake fluid) 488
Fluid level (washer fluid) 501
Oil level (engine oil) 478
Child restraint systems 79
Installation of a booster cushion 90
Installation of a booster seat 90
Installation with ISOFIX anchor bars 92
Installation with seatbelt 86
ISOFIX anchor bars 92
Top tether anchorages 94
Child safety 5
Locks 152
Chime
Seatbelt 69, 180
Cleaning
Alloy wheels 460
Aluminum wheels 460
Center information display 463
Exterior care 458
High voltage battery air intake 463
Interior 461
Ventilation grille 282

Climate control system 273
Automatic 276
Manual 277
Clock 241
Coat hook 304
Combination meter display (color LCD) 203
Continuously variable transmission (CVT) 323
Fluid 487, 524
Coolant 482, 524
Changing 483
Temperature gauge 177
Cooling system 481
Cornering lamps 253
Corrosion protection 460
Cup holder 295
Front passenger's 295
Rear passenger's 296

D

Daytime running light system 249
Defogger 263
Defrosting 281
Deicer 263
Differential gear oil 487, 523
Dimensions 518
Display Off 221
Dome light 290, 510
Door
Locks 146
Open indicator light 191
Unlock selection function 134
Double locking system 150
Double trip meter 176
Drive belts 487
Driver Monitoring System 236, 387
OFF indicator light 201, 395
Operation indicator light 201, 395
Register user 236
Temporary stop indicator light 201, 395
Warning light 201, 395
Driving
All-Wheel Drive models 405
All-Wheel Drive warning light 191
Car phone/cell phone 8
Drinking 7
Drugs 7
Foreign countries 404
Off road 407
Pets 8
Snowy and icy roads 410
Tips 328, 402, 405
Tired or sleepy 8
Winter 409

E

e-BOXER system
Driving tips 43
Fail lamp 202
Features 32
Operation mode 33
Overheat warning light 202
Precautions 38

READY indicator light 202
Troubleshooting 45
Warning message 43
Electrical system 525
Electronic Brake Force Distribution (EBD) system 334
Warning 188
Electronic parking brake 343, 448
Automatic release function by accelerator pedal 345
Indicator light 189, 343
Switch 343
Warning light 189, 348
Emergency Locking Retractor (ELR) 69
Emergency stop signal 332
Energy flow screen 37
Engine 518
Compartment overview 477
Coolant 482, 524
Exhaust gas (carbon monoxide) 7, 403
Hood 475
Hood open warning light 191
Hood release knob 475
Low oil level warning light 185
Oil 478, 521
Overheating 443
Starting & stopping 318
EV (Electric Vehicle) drive mode 35
EV (Electric Vehicle) drive mode indicator 203
EV (Electric Vehicle) indicator 203
Exterior care 458

F

Flat tire repair kit 433
Technical data of air compressor 437
Flat tires 430
Floor mat 306
Fluid 524
Brake 488
Continuously variable transmission (CVT) 487
Fog light 254
Indicator light (front) 200
Indicator light (rear) 200
Switch 254
Front
Differential gear oil 487, 523
Fog light 254
Fog light indicator light 200
Fog light switch 254
Passenger's frontal airbag ON and OFF indicators 183
Passenger's seatbelt warning light 180
Front Cross Traffic Information 359
Front seats 48
Cushion angle adjustment 51
Forward and backward adjustment 50, 51
Head restraint adjustment 57
Heater 65
Manual seat 50
Power seat 51
Reclining 51
Seat heater 65
Seat height adjustment 51
Seat ventilation 66

Fuel 313, 520
Consumption indicator 211
Economy hints 402
Filler lid and cap 314
Gauge 177
Low fuel warning light 191
Requirements 313, 520
Tank capacity 520
Fuses 509

G
Glove box 294

H
Hands-free Power Rear Gate function 161
Hands-free Power Rear Gate off switch 162
Hazard warning flasher 174, 428
Head restraint adjustment
Front seat 57
Rear seat 62
Headlight 244, 511
Beam leveler 254
Bulb replacement 511
Bulb wattage 527
Control switch 243
Flasher 246
Indicator light 199
Off delay setting 244
Warning light 199, 511
Washer 262
Heated Steering Wheel system 269
Heater
Front seat 65
Rear seat 65
High beam assist 246
Function 246
Indicator 199
High voltage battery and high voltage battery air intake 42
High/low beam change (dimmer) 246
Hill descent control 338, 340
Indicator light 200, 340
Hill start assist system 349
Hook
Cargo tie-down 308
Coat 304
Shopping bag 305
Towing and tie-down 445
Horn 270

I
Icy road surface warning light 201
Illumination brightness control 178
Indicator/Indicator light
Adaptive driving beam 199, 251
Auto Vehicle Hold 190, 345
Door open 191
Driver Monitoring System OFF 201, 395
Driver Monitoring System operation 201, 395
Driver Monitoring System temporary stop 201, 395
e-BOXER READY 202
e-BOXER system fail 202

e-BOXER system READY 202
Electronic parking brake 189, 343
Front Cross Traffic Braking OFF indicator 359
Front fog light 200, 254
Front passenger's frontal airbag ON and OFF 183
Headlight 199
High beam 199, 244
High beam assist 199, 246
Hill descent control 200, 340
Immobilizer 198
Intelligent (I) mode 198, 329
Malfunction 184
Pedestrian alert system OFF 202
RAB OFF 201, 378, 385
Rear fog light 200, 255
Security (Immobilizer indicator light) 198
Select lever/Gear position 198
SI-DRIVE 198, 329
Sonar audible alarm OFF 202
Sport (S) mode 198, 329
Steering Responsive Headlight OFF 199
Subaru Rear Vehicle Detection approach 370
Subaru Rear Vehicle Detection OFF 200, 373
Turn signal 199
Vehicle Dynamics Control OFF 193, 335
Vehicle Dynamics Control operation 192, 335
X-MODE 200, 339
Inside mirror 264
Interior lights 290
Inverter with converter assembly coolant 524
ISOFIX anchor bars 92

J
Jack and jack handle 429
Jack handle 429
Jack-up point 430
Jump starting 439

K
Key
Access key fob 128, 143
Number plate 141
Replacement 142
Keyless access entry function 131
Keyless access with push-button start system 128
Disabling keyless access functions 138
Locking and unlocking doors 131
Warning chimes and warning indicator 141, 193
When access key fob does not operate properly 141, 449
Keyless entry system 143

L
Lane Change Assist (LCA) 367
Lap belt pretensioner 77
Leather seat materials 462
LED headlight warning light 199, 511
LED headlights 511
Light
Back-up 528
Cargo area 291, 510, 528
Control switch 243
Daytime running 249

Dome 290, 510, 528
Front fog 254
Front position 244
Front turn signal 256
High-mounted stop 528
License plate 528
Map 290, 510, 528
Rear combination 528
Rear fog 255, 528
Rear gate 291
Rear turn signal 256, 511, 528
Side turn signal 528
Stop 528
Stop/tail 511
Tail and stop 528
Turn signal 511, 528
Vanity mirror 293, 510, 528
Loading your vehicle 413
Low fuel warning light 191
Low tire pressure warning light 185, 341

M

Maintenance
Precautions 471
Schedule 467
Seatbelt 75
Tips 473
Tools 428
Malfunction indicator light (Check Engine light) 184
Manual
Climate control 277
Mode (continuously variable transmission) 327
Seat 50
Map light 290, 510, 528
Meters and gauges 175
Mirror defogger 263
Mirrors 264

N

New vehicle break-in driving 402

O

Odometer 176
Off road driving 407
Oil filter 480
Oil level
Engine 478
Front differential gear 487
Rear differential gear 487
Warning light 185
Oil pressure warning light 185
On-road and off-road driving 9, 407
One-touch lane changer 256
Outside
Mirror defogger 263
Mirrors 263, 265
Overhead console 293
Overheating engine 443

P

Parking your vehicle 343
Parking brake 343

Tips 349
Passenger seatbelt reminder 180
Pedestrian alert system OFF indicator light 202
Pedestrian alert system warning indicator light 202
Periodic inspections 404
Petrol fuel 313
PIN Code Access 135
PIN Code Lock 242
Activation 242
Deactivation 243
Power
Folding mirror switch 267
Meter 175
Outlet 297
Outside mirrors 265
Rear gate 157
Seat 51
Steering 330
Steering warning light 191, 330
USB power supply 298
Window switches 153
Windows 152
Power rear gate 157
Precautions against vehicle modification 78, 124
Preparing to drive 317
Push-button
Ignition switch 172
Pedestrian alert system 36
Power meter 175
Starting and stopping engine 318

R
Rear
Differential gear oil 487, 523
Gate light 291
Rear Cross Traffic Alert (RCTA) 361, 368
Rear fog light 255
Indicator light 200
Switch 255
Rear gate 155, 450
Light 291
Power 157
Rear Seat Reminder 78
Rear seatbelt warning light and chime 182
Rear seats 58
Armrest 64
Folding down 59
Head restraint adjustment 62
Heater 65
Reclining 61
Rear view camera 361
Rear window
Defogger 263
Wiper and washer switch 261
Wiper blade rubber 505
Wiper blades 502, 505
Recommended
Brake fluid 488, 524
Continuously variable transmission fluid 524
Differential gear oil 487, 523
Engine oil 480, 521
Spark plugs 525

Refueling 314
Remote control mirror switch 265
Remote keyless entry system 143
Replacing battery 513
Replacement
Access key fob battery 514
Air cleaner element 485
Brake pad 489
Cabin air filter 284
Key 142
Remote keyless entry transmitter battery 513
Tire 496
Wheel 500
Wiper blades 502
Replacing a coin/button cell battery precaution 536
Replacing bulbs 510
Headlight 511
Rear turn signal light 511
Stop/tail light 511
Reverse Automatic Braking (RAB) system 375
OFF indicator 201, 378, 385
ON/OFF setting 385
Warning indicator 201, 378, 386
Rocking the vehicle 413
Roof antenna 288
Roof rack 415
Roof rails 414

S

Safety
Precautions when driving 5
Symbol 3
Warnings 3
Sealing flat tire 430
Flat tire repair kit 433
How to seal 434
Safety precautions 431
Seat
Fabric 461
Front 48
Heater 65
Height adjustment 51
Manual 50
Power 51
Rear 58
Ventilation 66
Seatbelt 5, 67
Fastening 69
Maintenance 75
Pretensioners 75
Safety tips 67
Warning light and chime 180
Security
Immobilizer 142
Indicator light (immobilizer) 198
Select lever 323, 324
Position indicator 198
Shift lock function 326
Shift paddle 327
Shopping bag hook 305
Shoulder pretensioners 76
SI-DRIVE 329

Indicator 198
Intelligent (I) mode indicator 198, 329
Sport (S) mode indicator 198, 329
Switch 329
Snow tires 412, 490
Snowy and icy roads 410
Sonar audible alarm OFF indicator 202
Spark plugs 486, 525
Specifications 518
Speedometer 175
SRS airbag (Supplemental Restraint System airbag) 5, 96, 108
System monitors 123
System servicing 123
System warning light 108, 123, 183
Starting & stopping engine 318
Steering lock 322
Steering Responsive Headlight (SRH) 249
OFF indicator light 199
Warning light 199
Steering wheel
Heated Steering Wheel system 269
Lock 322
Power 330
Tilt/telescopic 268
Stop light 528
Storage compartment 293
Subaru Rear Vehicle Detection (SRVD) 366, 556
OFF indicator 200, 373
SRVD approach indicator light/warning buzzer 370
Warning indicator 200, 374
Summer tires 490
Sun visors 292
Sun visors extension plate 292
Sunroof 166, 451
Switch 167
Sunshade 167
Supplemental Restraint System (SRS) airbag 5, 96
Curtain airbag 104, 119
Driver's airbag 104, 114
Far-side airbag 104, 119
Front passenger's airbag 104, 114
Knee airbag 104, 114
Seat cushion airbag 104, 118
Side airbag 104, 119
Synthetic leather upholstery 462

T

Temperature gauge 177
Tether (child restraint system) 94
Tie-down hooks/holes 445
Tilt/telescopic steering wheel 268
Tire 490, 525
All season 490
Chains 412
Inspection 492
Pressures and wear 493
Replacement 496
Rotation 496
Size and pressure 525
Summer 490
Types 490

Winter (snow) 490
Tire pressure monitoring system (TPMS) 185, 341, 438, 490
Mode setting 342
Screen 342
Warning light 185
Tires and wheels 490
Tools 428
Top tether anchorages 94
Towing 444
Flat-bed truck 448
Tie-down hooks 445
Weight 416
Traction control function 335
Trailer
Additional information 423
Hitch 417
Towing 416
Towing tips 418
Trip meter 176
Turn signal
Indicator lights 199
Lever 256

U

Under-floor storage compartment 309
USB power supply 298

V

Vanity mirror 293
Light 293, 510
Vehicle
Identification 530
Symbols 4
Vehicle Dynamics Control 335
OFF indicator light 193
Operation indicator light 192
Warning light 192
Ventilator 272

W

Warning and indicator lights 179
Warning chimes
Driver Monitoring System 395
Keyless access with push-button start system 193
Seatbelt 180
Warning light/Warning indicator
ABS 187
Access key 193
Adaptive driving beam 199
All-Wheel Drive 191
Automatic headlight beam leveler 199
Brake system 188, 189
Charge 184
Check Engine 184
Disc brake pad wear 333
Driver Monitoring System 201, 395
e-BOXER system overheat 202
Electronic parking brake 189
Engine hood open 191
Engine low oil level 185
Front Cross Traffic Braking 202

Front passenger's seatbelt 180
Icy road surface 201
Keyless access with push-button start system 193
LED headlight 199, 511
Low fuel 191
Low tire pressure 185, 341
Oil pressure 185
Pedestrian alert system 202
Power steering 191, 330
RAB 201, 378, 386
Rear seatbelt 182
Seatbelt 180
SRS airbag system 108, 123, 183
Steering Responsive Headlight 199
Subaru Rear Vehicle Detection 200, 374
Vehicle Dynamics Control 192
Windshield washer fluid 191
Warranties 2
Washing 458
Waxing and polishing 459
Wear indicators 495
Wheel
Alloy 501
Balance 494
Nut tightening torque 430, 525
Replacement 500
Window breaking tool 455
Windows 152
Windshield
Washer fluid 501
Washer fluid warning light 191
Wiper and washer switches 259
Wiper blades 502
Wiper deicer 263
Winter
Driving 409
Tires 412, 490
Wiper and washer 256
Wiper deicer 263
Wireless charger 299

X

X-MODE 338
Indicator 200, 339
Switch 339

GAS STATION REFERENCE

■ Fuel

▼ For Australia

- Fuel type: **Unleaded petrol** only
- Research Octane Number (RON): **91** or higher is recommended. For optimum engine performance and driveability, it is recommended that you use premium grade unleaded petrol.
- Ethanol blended petrol: Ethanol content is up to 10%.

▼ For Europe

- Fuel type: **Unleaded petrol** only
- Research Octane Number (RON): **95** or higher is recommended. If unleaded petrol with 95 RON or higher is not available, unleaded petrol with 90 RON or higher may be used.
- Ethanol blended petrol: **E5, E10** or the ethanol content is up to 10%.

▼ For other areas

- Fuel type: **Unleaded petrol** only
- Research Octane Number (RON): **95** or higher is recommended. If unleaded petrol with 95 RON or higher is not available, unleaded petrol with 90 RON or higher may be used.
- Ethanol blended petrol: Ethanol content is up to 15%.

■ Fuel Tank Capacity

63 liters (16.6 US gal, 13.9 Imp gal)

■ Engine Oil

Use only the following oils.

- ILSAC (International Lubricant Specification Advisory Committee) GF-6B, which can be identified with the ILSAC certification mark (Shield mark)
- or ILSAC GF-5 or GF-6A which can be identified with the ILSAC certification mark (Starburst mark)
- or API classification SN with the words “RESOURCE CONSERVING”, SN PLUS with the words “RESOURCE CONSERVING” or SP with the words “RESOURCE CONSERVING”
- or ACEA specification A3 or A5

NOTE

Availability of engine oil products in the market is dependent on country and region.

For the complete viscosity requirements, refer to “Engine Oil” ☞P521.

■ Engine Oil Capacity

4.4 liters (4.7 US qt, 3.9 Imp qt)

The indicated oil quantity is only a guideline and is estimated based on a case when the engine oil is changed with an oil filter. After refilling the engine with oil, the oil level should be checked using an oil level gauge. For more details about maintenance and service, refer to “Engine Oil” ☞P478.

■ Cold Tire Pressure

See the label located under the driver’s door latch.